BEOVIĆ

Schlemmer
Our Technology.Your Success.

Katalog/Catalog

Hrvatski/English

- Zaštita/Protection
- Spajanje/Connection
- Zrak i tekućine/Air & Fluid
- Mehatronika/Mechatronic
- Tokareni dijelovi/Turning Parts

www.schlemmer.com
www.beovic.hr

O nama / Company
lokacije, osobe za kontakt, osobne karte tvrtki
Locations, Contact Persons, Company Profile

1

Sustavi zaštite / Protection Systems
kabelski sustavi zaštite
Cable Protection

2

Sustavi spajanja / Connection Systems
kabelske uvodnice i pribor
Cable Glands & Accessories

3

Sustavi za zrak i tekućine / Air & Fluid Systems
sustavi za provođenje zraka i tekućina
Media Carrying Solutions

4

Mehatronički sustavi / Mechatronic Systems
mehatronika i elektronika
Mechatronics & Electronics

5

Tokareni dijelovi / Turning Parts
metelni tokareni dijelovi rađeni po mjeri
Customized Metal turned parts

6

Informacije / Information
oznake, komentari, tehnički dodatak
Legend, Comments, Technical Appendix

7

Indeks brojeva artikala
Art.-No. Index

8

9

10

Schlemmer

O nama
Company

	Seite
O tvrtci Beović	3
O tvrtci Schlemmer	4 - 5
Schlemmer u svijetu	6 - 7
Usluge	8 - 9
Osnovne grupe proizvoda	10 - 11

	page
Company Profile Beović	3
Company Profile Schlemmer	4 - 5
Locations worldwide	6 - 7
Services	8 - 9
Product Divisions	10 - 11

O tvrtci Beović
About Beović

Mi smo dugogodišnji zastupnik Schlemmerovih proizvoda na hrvatskom, srpskom i bosansko–hercegovačkom tržištu. Naša logistika jer brza i efikasna čak i prilikom zahtjevnih isporuka i udaljenih destinacija, budući da je precizno usklađena s centralnim logističkim sustavom Schlemmera. Osim toga, nudimo podršku i stručnu pomoć u odabiru potrebnih rješenja na polju svih ponuđenih sustava spajanja i zaštite instalacija.

Vizija

Dugoročne smjernice našeg djelovanja su da, uvijek dostupnom, cjelovitom, ekspeditivnom i logistički podržanom opskrbom postanemo i ostanemo najkvalitetniji ponuđač na tržištu sustava zaštite električnih instalacija, zaštite distribucije tekućina (goriva, ulja i ostalih), zaštite zračnih i tlačnih razvoda, te mehatroničkih sustava.

Misija

Smisao ili svrha našeg poduzimanja je neprestan razvoj kvalitete u prezentiranju, nuđenju, prodaji Schlemmerovih proizvoda na tržištima Hrvatske, Srbije i ostalih zemalja u regiji. Naš način je da kontunuirano pratimo, bilježimo, analiziramo i poboljšavamo odnos s kupcima i tako dodajemo nove vrijednosti u izvršenju naših usluga.

Obilježja naše usluge su: podrška u naručivanju, odgovornost, točnost i brzina u izvršenju isporuka. Obilježja našeg odnosa su: ljubaznost, kooperativnost i uvažavanje.

Izvršavanjem tako koncipirane misije, postižemo „da nam se vraća kupac, a ne reklamacija.“

Povijest tvrtke Beović

Beović trgovina i usluge d.o.o. iz Šenkovca osnovano je 1992. godine kao uvoznik Schlemmerovih proizvoda za hrvatsko tržište. Krajem 2006. godine postigli smo status zastupnika ovlaštenog od strane Schlemmer-a za područje Hrvatske, Srbije te Bosne i Hercegovine.

Schlemmer GmbH iz Poinga u Bavarskoj, lider je u snabdijevanju svjetskog tržišta sustavima zaštite elektroinstalacija, razvoda za zrak i tekućine i mehatronike za različite industrije. Tvrtka je osnovana 1954. godine, a danas su njezini proizvodi prisutni diljem svijeta, s proizvodnim pogonima na svim kontinentima osim Australije.

Logistička podrška koji pruža tvrtka Beović

Schlemmerovi cjeloviti sustavi zaštite elektroinstalacija, razvoda za tekućine i zrak, kao i mehatroničkih uređaja sadrže više od osam i pol tisuća zasebnih proizvoda. To je stoga, što ponudom naših proizvoda želimo pokriti zaista sve potrebe u tom segmentu. Stoga je kupcima ponekad teško brzo i točno odabrati odgovarajuće proizvode u odnosu na njihove specifične potrebe. Zato je tu BEOVIĆ.

Naši stručnjaci će vam pomoći u odabiru zaštite prema vašim potrebama.

Tvrtka Beović danas

Tvrtka Beović nudi našem regionalnom tržištu visoko kvalitetne proizvode, ali i visoko kvalitetan - partnerski odnos s kupcima, usklađen s ISO standardom za upravljanje kvalitetom proizvoda, usluga i zaštite okoliša.

Imati u svojoj zemlji, ili kako to obično kažemo - „na svom kućnom pragu“, eksperte i isporučitelje tako sofisticiranih proizvoda za svekolike potrebe, velika je pogodnost.

Iskoristite je!

Sjedište
Headoffice

Beović d.o.o.
Vatrogasna 2
10292 Šenkovec
Hrvatska
tel.: +385 1 3395 577
fax: +385 1 3396 690
e-mail: info@beovic.hr, www.beovic.hr

Naš tim:
Our team:

Direktor
General manager
Biljana Beović
Phone: +385 1 3395 577
Fax: +385 1 3396 690
E-Mail: biljana@beovic.hr

Prodaja
Sales Manager
Snježana Brajić
Phone: +385 1 3395 577
Fax: +385 1 3396 690
E-Mail: snjezana@beovic.hr

Prokurist
Procurator
Nenad Beović
Phone: +385 1 3395 577
Fax: +385 1 3396 690
E-Mail: nenad@beovic.hr

O Schlemmeru

Snaga Schlemmer grupe

Schlemmer je sa dvije svoje jedinice zastupljen u pet različitih proizvodnih područja kao svjetski proizvođač i razvojni partner u internacionalnoj industriji i automobilskim grupacijama, te je poznat po brojnim inovacijama i konceptima razvojnih sustava koji stvaraju sinergiju.

Danas, više od 50 godina, nakon što je 1954. kompanija nastala, osnovni posao Schlemmera GmbH je u razvoju i proizvodnji sustava spajanja i zaštite instalacija - uključujući rebraste i glatke cijevne sustave. Pri tome valja istaknuti, da su za postojano širenje kompanije glavnu ulogu igrali proizvodi na polju: spojnih sustava - uključujući kabelske i cijevne spojnice i uvodnice, mehatroničkih sustava - uključujući sonde i senzore i na polju zaštitnih sustava za zrak i tekućine – uključujući srednje provode i spremnike. U 2008. godini, asortiman je dopunjen jedinstvenim proizvodnim programom na području tokarenih dijelova – koji su prilagodljivi i izrađeni od metala.

Održivi proizvodni procesi, inovativni proizvodi i strategija ekonomske globalizacije, tri su temeljna stupa Schlemmerova poslovnog razvoja.

Schlemmer živi bavarsku globalizaciju

Glavni ured Schlemmer grupe nalazi se blizu Münchena u Njemačkoj. Uz istraživanje i razvoj, globalno umreženje tvrtke važan je faktor uspjeha. Proizvodni pogoni i distribucija uslužno su orijentirani prema kupcu, a logistički centri i podružnice jamče maksimalnu fleksibilnost i kratko vrijeme odziva. Mi smo se približili našim kupcima širom svijeta u svakom pogledu - u odnosu na cijene, kvalitetu i geografski.

Na tim značajkama se temelji timski duh obitelji od oko 1.400 zaposlenih u 33 zemlje svijeta.

Kako putem usklađenosti stvaramo dobrobit za naše kupce

Pomoću usklađenosti razvoja novih proizvoda s visokim stupnjem inovativnosti i njihovom sistematskom kombinacijom na pet međusobno usklađenih polja poslovanja, ukupnost svojih usluga Schlemmer uspijeva ponuditi kupcima kroz jednu zaista izvanrednu dimenziju.

Kao rezultat tog jedinstvenog i svjetski rasprostranjenog nivoa usluga, mi smo u stanju odgovoriti na zahtjeve u svakom području primjene – od temeljnih proizvoda do high–tech rješenja sistema zaštite specijalno dizajniranih prema specifikacijama naših kupaca.

U razvoju novih proizvoda Schlemmer podjednako vodi računa kako da njihovi proizvodi cjenovno budu cjenovno isplativi, kao i da budu što jednostavniji u primjeni.

Prilikom izvođenja, naši kupci se uvijek mogu osloniti na nas, bilo da im je podrška potrebna u pojedinim fazama nekog projekta, ili za ukupno tehničko rješenje.

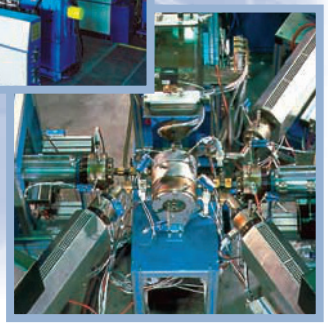

Sjedište

Schlemmer GmbH
Gruber Straße 48
85586 Poing
Phone: +49/(0)8121/804-0
Fax: +49/(0)8121/804-113
E-Mail: info@schlemmer.com
www.schlemmer.com

About Schlemmer

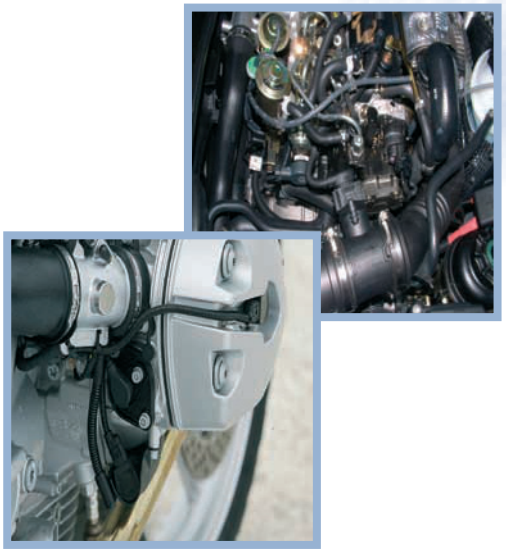

The Schlemmer power pack

The Schlemmer Group is a worldwide active manufacturer and development partner of international industry and automotive groups with two business units, five business fields, numerous innovations and a continuous system concept that creates synergies.

More than 50 years after the company's set-up in 1954, the core business of Schlemmer GmbH still lies in the development and manufacture of **protection systems** including corrugated and smooth tube systems. For the consistent expansion of the company the business fields **connection systems** including connection and gland connection parts, **mechatronic systems** including probes and sensors and **air and fluid systems** including medium-conducting lines and containers play a major role. In 2008 this unique product portfolio was supplemented by the business field **turning parts** including customised metal turned parts.

Sustainable manufacturing processes, innovative products and an economic globalisation strategy are the three columns of Schlemmer's business development.

Schlemmer lives Bavarian globalisation

The head office of the Schlemmer Group is located near Munich/ Germany. In addition to research and development, the global network is an important success factor. A customer and service-oriented distribution of production facilities, logistics centres and branches guarantee short response times and maximum flexibility. We get close to our customers in every respect – with regard to price, quality and also geographically all over the world.
Behind this performance are the power and the family team spirit of around 1,400 employees in 33 countries.

Using synergies to the benefit of our customers

Due to synergies in the development of new products, the high degree of innovation and the systematic combination of the five business fields, the service portfolio for Schlemmer's customers experiences an extraordinary dimension.

As a result of this worldwide unique range of services, we can offer demand-based solutions for each field of application - from the basic product to the intelligent high-tech system solution and special designs according to customer specifications.

For the development of new products Schlemmer always orient themselves on the economic benefit to the customer and also on the handling of components.

In the process, our customers can rely on personal assistance and service during the individual project phases up to the overall technical application solution.

Headoffice

Schlemmer GmbH
Gruber Straße 48
85586 Poing
Phone: +49/(0)8121/804-0
Fax: +49/(0)8121/804-113
E-Mail: info@schlemmer.com
www.schlemmer.com

Schlemmer u svijetu
Locations worldwide

A = Autoindustrija/Automotive
I = Industrija/Industry

■ = Proizvodnja/Production
● = Logistika/Logistics

EUROPA
EUROPE

Njemačka/Germany
A+I ■ ●
Headoffice
Schlemmer GmbH
Gruber Straße 48
D-85586 Poing
Phone: +49/(0)8121/804-0
Fax: +49/(0)8121/804-113
E-Mail: info@schlemmer.com

Danska/Denmark
I ●
Joergensen Appliance A/S
Praestermarksvej 8
DK-4000 Roskilde
Phone: +45/46/75 63 22
Fax: +45/46/75 61 40
E-Mail: info@joap.dk

Finska/Finland
I ●
TSP Tampereen Sähköpalvelu
Lentokentänkatu 9 B
FI-33900 Tampere
Phone: +358/32/51 51 11
Fax: +358/32/51 52 11
E-Mail: tsp@tsp.fi

Francuska/France
A
Schlemmer GmbH en France
9-11, rue Benoît Malon
F-92150 Suresnes
Phone: +33/1/46 14 82 30
Fax: +33/1/46 14 87 50
E-Mail: info-france@schlemmer.com

I ■ ●
S.I.B. - A.D.R.
50, rue du Capitaine Maillard
B.P. 40
F-57220 Boulay
Phone: +33/38/7 79 20 22
Fax: +33/38/7 57 39 92
E-Mail: sib-adr@wanadoo.fr

Ujedinjeno kraljevstvo/Irska/Australija
United Kingdom/Ireland/Australia
A+I ●
Autotechnik Systems Ltd
9 Merse Road
North Moons Moat - Redditch
Worcestershire B98 9HL-GB
Phone: +44/1527/59 80 50
Fax: +44/1527/59 80 55
E-Mail: info@autotechnik.co.uk

Italija/Italy
A+I ■ ●
Schlemmer Italia s.r.l.
Via Campi della Rienza 21
I-39031 Brunico (BZ)
Phone: +39/04 74/57 17 00
Fax: +39/04 74/55 55 11
E-Mail: info@schlemmer.it

Logistic Center:
Loc. Vanzelle
I-37010 Rivoli Veronese (VR)
Phone: +39/045/6 28 00 13
Fax: +39/045/6 28 00 14
E-Mail: info@schlemmer.it

Hrvatska/Srbija/BIH/
Crna Gora/Kosovo
Croatia/Serbia/B&H/
Montenegro/Kosovo
A+I ●
Beović d.o.o.
Vatrogasna 2
HR-10292 Šenkovec
Phone: +385/1/3 39 55 77
Fax: +385/1/3 39 66 90
E-Mail: info@beovic.hr
www.beovic.hr

Nizozemska/Belgija
Netherlands/Belgium
I
Ingenieursbureau Cassirer B.V.
Koninginnegracht 101
NL-2514 AI-Den-Haag
Phone: +31/70/3 50 16 61
Fax: +31/70/3 50 22 79
E-Mail: info@cassirer.nl

Norveška/Norway
I ●
Elis Elektro AS
Jerikoveien 16
N-1067 Oslo
Phone: +47/22/90 56 70
Fax: +47/22/90 56 71
E-Mail: post@eliselektro.no

Austrija/Austria
I
HEINISCH
Messtechnik GmbH
Zirkusgasse 3
A-1020 Wien
Phone: +43/1/4 81 51 81
Fax: +43/1/4 81 51 81-10
E-Mail: office@heinisch-messtechnik.at

Poljska/Poland
I
MERCATOR
Tomasz Jaworski
ul. Wilcza 29 A/4
PL-00-544 Warszawa
Phone: +48/22/6 25 66 60
u. 6 25 65 41
Fax: +48/22/6 21 61 08
E-Mail: mercator@mercator-e.pl

Rumunjska/Romania
A+I ■ ●
S.C. Schlemmer Romania SRL
Str. Careiului Nr. 8/A
447355 Vetis, Satu Mare
Phone: +40/261/70 69 31
Fax: +40/261/70 69 40
E-Mail: info-romania@schlemmer.com

Rusija/Russia
A+I
Schlemmer Russland
ul. Juliusa Futschika 60
RUS-603147 Nizhni Novgorod
Phone: +7/831/218 05 18
Mobile: +7/920/044 10 88
Fax: +7/831/218 05 18
E-Mail: info-russia@schlemmer.com

Švedska/Sweden
A+I ●
A : ukj. Norveška/Finska/Danska
incl. Norway/Finland/Denmark
EG Electronics
Gribbylundsv 11-13
S-18762 Täby
Phone: +46/8/58 70 88 00
Fax: +46/8/58 70 88 02
E-Mail: info@osterlinds.se

Slovenija/Slovenia
I
PRO ADRIA
Notranja in zunanja trgovina d.o.o.
Vrhovci c. 26 / 14
1000 Ljubljana
Phone: +386/1/4 23-69-90
Fax: +386/1/4 23-69-95
E-Mail: proadria@siol.net

Španjolska/Portugal
Spain/Portugal
A+I ●
Schlemmer Iberica,
S.A.U. Unipersonal
P.I. La Serra II, C
Priorat n° 4, Nave 12
E-08185 Llicá de Vall (Barcelona)
Phone: +34/93/8 63 40 04
Fax: +34/93/8 63 40 05
E-Mail: info-iberica@schlemmer.com

Češka/Slovačka
Czechia/Slovakia
A+I
Schlemmer GmbH
Kounicova 3
CZ-60200 Brno
Phone: +420/723/36 62 52
Fax: +420/549/21 37 06
E-Mail: jiridedecek@seznam.cz

Bjelorusija/Belarus
I ●
FEK company
29B Pushkin Av.
BY-220015 Minsk, Belarus
Phone: +375/17/210 21 89
Fax: +375/17/210 22 74
E-Mail: info@fek.by

A = Autoindustrija/Automotive
I = Industrija/Industry
■ = Proizvodnja/Production
● = Logistika/Logistics

Schlemmer u svijetu
Locations worldwide

SJEVERNA AFRIKA
NORTH AFRICA

Maroko/Morocco
A+I ■ ●
Schlemmer Maroc Sarl
Ilot 27 Lot 2
Zone Franche d'Exportation
90024 Boukhalef - Tanger
Phone: +212/539/39 43 00
Fax: +212/539/39 43 01
E-Mail: info-morocco@schlemmer.com

Tunis/Tunisia
A+I ■ ●
Schlemmer Tunisie sarl Siège social
Parcelle N. 84 Z.I. Afi M´Ghira 2
B.P. 186 PTT FOUCHANA - 2082- TUNISIA
Phone: +216/79/40 83 52 oder/
40 83 59
Fax: +216/79/40 82 02
E-Mail: info-tunisia@schlemmer.com.tn

JUGOZAPADNA AZIJA
MIDDLE EAST

Jugozapadna Azija/Middle East
A+I ●
Schlemmer Middle East
Unit FZS5 BC07
Jebel Ali Free Zone
Dubai
United Arab Emirates
Phone: +971/507 94 46 38
Fax: +971/4/8 86 52 03
E-Mail: info-vae@schlemmer.com

Izrael/Israel
I ●
EL-KAM LTD.
26 Hataas Street
44425 Kfar-Saba
Phone: +972/9/7 65 88 08
Fax: +972/9/7 65 85 45
E-Mail: el-kam@el-kam.com

Indija/India
I ●
Controlwell India Pvt. Ltd.
A-101, Prithvi Park
Plot No. 4, 5 & 6
Sector 30
Sanpada
Navi Mumbai - 400 705
Phone: +91/22/27 63 62 93
Fax: +91/22/27 61 87 67
E-Mail: controlwell@connectwell.com

SJEVERNA AMERIKA
NORTH AMERICA

SAD/USA
A ●
Schlemmer USA Inc.
NAFTA Region
4709 Macro Drive
San Antonio, TX 78218
Phone: +1/210/491-48 00
Fax: +1/210/481-35 16
E-Mail: info-usa@schlemmer.com

I ●
Altech Corp.
35 Royal Road
NJ 08822-6000 Flemington
Phone: +1/908/8 06-94 00
Fax: +1/908/8 06-94 90
E-Mail: info@altechcorp.com

Meksiko/Mexico
A ■ ●
Schlemmer S.A.
Carretera Federal Puebla Tlaxcala
Km. 14.5 Int D
San Francisco Papalotla de Xicohtencatl
Tlaxcala, Mexico CP 90790
Phone: +52/222/2 24 89 43
Fax: +52/222/2 24 89 45
E-Mail: info-mexico@schlemmer.com

I ●
Altech Corp. México
Adolfo López Mateos No. 1321-A
Santa Cruz Buenavista
Puebla, Pue 72154. México
Phone: +52/222/2 26 70 47
Fax: +52/222/2 26 70 50
E-Mail: mexicoinfo@altechcorp.com

JUŽNA AMERIKA
SOUTH AMERICA

Brazil/Argentina
Brazil/Argentina
A ■ ●
Schlemmer do Brasil Ltda.
Rua Doutor Paulo Leite de Oliveira, 171
Jardim Raposo Tavares-Sao Paulo-SP
05551-020 BRAZIL
Phone: +55/11/37 32-03 00
E-Mail: info-brasil@schlemmer.com

SREDNJA AMARIKA
CENTRAL AMERICA

Honduras/Honduras
A
Schlemmer GmbH
Apartado Postal # 3352
Tegucigalpe, N.D.C. / Honduras C.A.
E-Mail: info-mexico@schlemmer.com

AZIJA
ASIA

Kina/China
A+I ■ ●
Ningbo Schlemmer (Headoffice China)
Automotive Parts Co., Ltd.
Xizhou Economic and Development
Zone Xiangshan Ningbo
PRC-315722 Province Zhejiang
Phone: +86/574/65 83 92 58
Fax: +86/574/65 83 92 59
E-Mail: info-china@schlemmer.com

Ningbo Schlemmer
Automotive Parts Co., Ltd
Zhongshan Branch
Maxin Industry Zone
Huangpu Town, Zhongshan City
Guangdong Province/PRC
Phone: +86/760/2 50 03 28
Fax: +86/760/2 50 03 27
E-Mail: zhangzhichao@schlemmer.com.cn

Changchun Schlemmer
Automotive Parts Co., Ltd.
449# Lianyungang Road
Econmic and Development Zone
Changchun City
JiLin Province/PRC
Phone: +86/431/84 68 99 44
Fax: +86/431/84 61 99 44
E-Mail: siyuhang@schlemmer.com.cn

Suzhou Schlemmer
Automotive Parts Co.,Ltd.
Panyang Industry Zone
Huangdai County, Suzhou City
215143 Jiangsu Province/PRC China
Phone: +86/512/65 79 81 30
Fax: +86/512/65 79 81 33
E-Mail: liuwenliang@schlemmer.com.cn

Japan/Japan
A ●
Schlemmer Japan Co. Ltd.
7-12-15-102 Kamimizo Sagamihara
229-1123 Kanagawa
Phone: +81/42/7 61-80 50
Fax: +81/42/7 61-80 59
E-Mail: info-japan@schlemmer.com

Koreja/Korea
A ■ ●
Schlemmer Korea Co., Ltd.
1010, Woram-dong
704 833 Dalseo-gu, Daegu, Korea
Phone: +82/53/5 87-50 41
Fax: +82/53/5 87-50 43
E-Mail: info-korea@schlemmer.com

Malezija/Malaysia
A+I ●
Schlemmer (M) Sdn. Bhd.
Lot 9, Jalan SS 13/6C
Selangor Darul Ehsan
MAL-47500 Subang Jaya
Phone: +60/3/56 31 11 25
Fax: +60/3/56 31 09 19
E-Mail: info-malaysia@schlemmer.com

Singapur/Indonezija/Vijetnam
Singapore/Indonesia/Vietnam
A+I ●
Schlemmer (SEA) PTE. LTD.
134 Joo Seng Road, #01-02
Singapore 368359
Phone: +65/67 47 28 77
Fax: +65/67 47 22 06
E-Mail: info-singapore@schlemmer.com

Tajland/Thailand
A+I ●
PIS Commercial Company Limited
410/133-134 Soi Ratchadapisek 22
Ratchadapisek Road
Samsennork, Huaykwang
Bangkok 10320
Phone: +66/2/5 41 54 04-7
Fax: +66/2/5 41 57 18-9
E-Mail: sales_int@piscommercial.co.th

Usluge

Razvoj

Razvoj/konstruiranje/izrada prototipova

Višeslojno izvlačenje (1- do 5-slojeva)
Modeliranje brizganjem u kalupe
Termoformiranje
Mehatronika
Metalni tokareni dijelovi

Podrška za rukovanje i montažu

Alati za montažu
Ultrazvučno zavarivanje rebrastih cijevi
Zaštita spojeva/kontakata

Montaža sklopova

Ručna
Poluautomatska
Potpuno automatizirane linije sklapanja

Testiranje proizvoda

Dokumentacija

Tehnički nacrti

Usluge na licu mjesta:

Usluga rezanja rebrastih cijevi
Rez na vrhu rebra

Tehničko savjetovanje u primjeni i podrška ključnim kupcima na licu mjesta bilo gdje u svijetu
Uslužni servis za kupce
Proizvodnja
Logistički centri

Tehnička podrška

Programi/Sistemi za konstruiranje:

Catia (V4, V5, R17)
Pro-Engineer (2001, Wildfire)
UG (UG 18, UG 2.0)
NX2/1

Formati datoteka za razmjenu:

IGES, STEP, CATIA, UG, DXF, DWG, PRT

Obuhvat usluge izrade prototipova:

Moguće je izvesti sve komercijalne prototipove.

Dodatne usluge:

Izvedbene studije na temelju projektne dokumentacije
- testiranje dijelova prije ugradnje
Izrada tehničkih nacrta za kupca
IMDS-dostava podataka
Razvoj materijala u suradnji sa proizvođačima sirovina
Simulacija brizganja u kalupe

Internet servis

Na raspolaganju su vam Schlemmer Internet Servisi na www.schlemmer.com za najsvježije informacije o proizvodima kao i download servis na Schlemmer Extranet-u za:

-2D tehničke nacrte
-3D CAD datoteke

Schlemmer Extranet pronaći ćete na Schlemmer Website-u ili na http://extranet.schlemmer.com

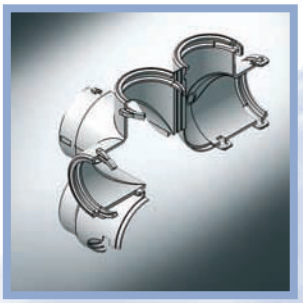

3D razdjeljnik
3D Manifold

Cijev za punjenje s obujmicom i poklopcem
Filling Tube with Clip and Cap

Obujmica
Fixing Clip

Zaštitni pokrov za utikač
Connector Interface

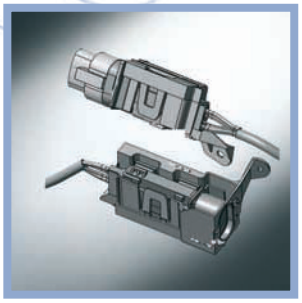

Nosač konektora
Plug Fitting

Services

Vodilica za kablove
Cable Duct

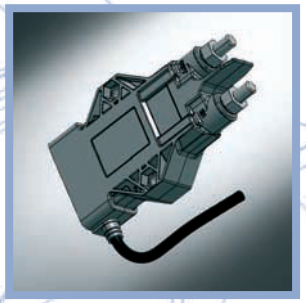

Glavni prekidač akumulatora
Battery Disconnector

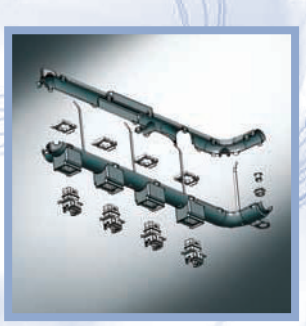

Vodilica za kablove
Cable Duct

Kutija s osiguračima
Fuse Box

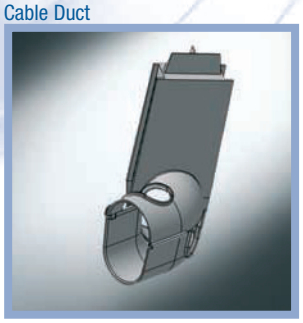

Uvodnica
Grommet

Development

Development/Design/Prototyping

- Multilayer-Extrusion (1- to 5-layers)
- Injection Moulding
- Thermoforming
- Mechatronic
- Metal Turned Parts

Support for Handling & Assembly

- Mounting Tools
- Ultrasonic Welding of Corrugated Tubes
- Contact-Protection

Assembly Group Manufacturing

- Manual
- Semi-Automatic
- Fully Automatic Assembly Lines

Product-Tests

Documentations

Drawings

On-Site Services:

- **Cutting Services for Corrugated Tubes**
  Cut on the crest
- **Technical Application Advice & Key Accounts Worldwide on-site**
  Customer Service Center
  Production
  Logistic-Centres

Technical Support

Construction Programs/-Systems:

- Catia (V4, V5, R17)
- Pro-Engineer (2001, Wildfire)
- UG (UG 18, UG 2.0)
- NX2/1

Data-Exchange Formats:

IGES, STEP, CATIA, UG, DXF, DWG, PRT

Scope of Prototype Services:

All commercially available prototypes are possible.

Accessorial Services:

- Installation Studies on the basis of design envelope data – Schlemmer parts can be trued without collision
- Customer Drawings
- IMDS-data supply
- Material Development in cooperation with raw material manufacturers
- Filling Simulations for injection moulding

Internet Service

You are welcome to use the Schlemmer Internet Services. Please go to: www.schlemmer.com
for the latest product information
as well as the download service in the Schlemmer Extranet for -2D Drawings
-3D CAD-Data
You will find the Extranet via the Schlemmer Website or http://extranet.schlemmer.com

Osnovne grupe proizvoda

sustavi zaštite

Sustavi zaštite s rebrasitm i glatkim cijevima:
- plastika/metal
- opletene cijevi
- EMC / zaštita od visokih temperatura
- zaštita optičkih kabela
- folijarna zaštita vodiča (FFC/FPC)

Sklopovi izrađeni brizganjem u kalupe:
- Razdjeljnici
- Zaštitni pokrovi za utikače
- kabelski kanali/ -vodilice/ -nosači

Zaštita od vibracija
Tekstilni zaštitni sustavi

sustavi spajanja

Cijevne uvodnice
Kabelske uvodnice
- plastika
- metal

Pribor
Pričvrsnice

sustavi za zrak i tekućine

Rebraste i glatke cijevi (do 5-slojeva)
Cijevi za gorivo i ulje
Sustavi za pranje stakala i sustavi za hlađenje
Brzospajajući sustavi
Cijevi za punjenje
Razvodi zraka
Cijevi za ventilaciju
Vakuum cijevi
Cijevi za sustave zračnih kočnica
Komponente i moduli za SCR
kontrolu emisije ispušnih plinova (AdBlue)

mehatronički sustavi

Sustavi za upozorenje i zaštitu u transportu opasnih tereta (ADR/GGVS)
Višepolni konektori
Spiralni kablovi
Razvodne kutije
Elektromehaničke komponente:
- sonde / senzori
- naponski transformatori
- glavni prekidači akumulatora

tokareni dijelovi

Tokareni dijelovi rađeni po mjeri izrađeni od:
- čelika
- nehrđajućeg čelika
- aluminija
- mesinga

EMC kabelska uvodica
EMC Cable gland

Kabelske uvodnice sa ATEX-zaštitom od eksplozije
ATEX-Explosion Protection Cable glands

sustavi spajanja

Senzor razine tekućine
Liquid Level Sensor

mehatronički sustavi

Naponski transformator
DC-Converter

tokareni dijelovi

Tokareni dijelovi od nehrđajućeg čelika
Turning parts stainless steel

Product Divisions

Krute/savitljive/glatke cijevi
Stiffened/Flexible/Smooth Tubes

sustavi zaštite

Zaštitni sustav: rebrasta cijev + zaštitni pokrov za utikač
Protection System: Corrugated tube + Connector interface for plug

sustavi za zrak i tekućine

Cijev za punjenje
Filling tube

Cijev za ispuštanje ulja
Oil drain tube

Crijeva / cijevi za provođenje tekućih medija (1- do 5 slojeva)
Media Carrying Tubes/Pipes (1- to 5-layers)

protection systems

Corrugated-, Smooth-, Protection-Tube Systems:
- Plastic/Metal
- Braidings
- EMC-/High Temperature Protection
- Optical Fibre Systems
- Flexible Circuit Systems (FFC/FPC)

Injection Moulding Parts:
- Manifolds
- Connector Interfaces
- Cable Ducts/-Rails/-Routes

Vibration Protection
Textile Protection Systems

connection systems

Tube Glands
Cable Glands
- Plastic
- Metal

Accessories
Fixings

air & fluid systems

Corrugated-/Smooth Tubes (up to 5 layers)
Fuel-/Oil Tubes
Windscreen-Washer-, Coolant Systems
Quick Couplings
Filler Necks
Air Flow Routing
Ventilation Tubes
Vacuum Tubes
Tubes for Air Brake Systems
Components & Modules for SCR-/Urea-Systems (AdBlue)

mechatronic systems

Hazardous System Parts (ADR/GGVS)
Multi Pole Connectors
Helix-/Connecting Cables
Terminal Boxes
Electromechanical Components:
- Probes/Sensors
- Voltage transformers
- Battery Main Switch

turning parts

Customized turning parts:
- Steel
- Stainless Steel
- Aluminium
- Brass

Sustavi zaštite / Protection Systems

2

Rebraste cijevi	Corrugated Tubes	2.1
Zaštitne cijevi + cijevne uvodnice	Protection Tubes + Tube Glands	2.2
Razdjelnici + zaštitni pokrovi za utikače	Manifolds + Connector Interfaces	2.3
Zaštita od tekstila	Textile Protection	2.4
Pribor	Accessories	2.5
Plastični brizgani dijelovi	Plastic Injection Molding	2.6

2.1

Cijevi rebraste

		stranica
Pregled		
Cijevi + pribor		4 - 5
Svojstva		6 - 7
Profili		8
Cijevi rebraste		
Poly-Tyl (LD-PE)	Standardni profil	9
PA 12	Standardni profil	10
PP	Standardni profil	11
	AHW (Automotive High Wave)	11
	High Flex	11
	UFW (Ultra Flat Wave)	11
PP GM	Standardni profil	12
	AHW (Automotive High Wave)	12
	High Flex	12
	UFW (Ultra Flat Wave)	12
PA 6 HB	Standardni profil	13
	UFW (Ultra Flat Wave)	14
	Lagane	15
	Teške / grube	16
PA 6 VO	Standardni profil	17
	UFW (Ultra Flat Wave)	18
PP-BS	Standardni profil	19
	AHW (Automotive High Wave)	19
	High Flex	19
	UFW (Ultra Flat Wave)	20
	JIS (Japanese Industrial Standard)	20
PPmod	Standardni profil	21
	AHW (Automotive High Wave)	21
	UFW (Ultra Flat Wave)	21
PAER	Standardni profil	22
	AHW (Automotive High Wave)	22
	High Flex	22
	UFW (Ultra Flat Wave)	22
TPE (Hytrel)	Standardni profil	23
TPC (Permaflex)	Standardni profil NOVO	24
TPC-EE (Arnitel)	Standardni profil	25
	AHW (Automotive High Wave)	25
	UFW (Ultra Flat Wave)	25
TPC-ES (Arnitel C)	Standardni profil	26
	UFW (Ultra Flat Wave)	26
ETFE TOP 200	Standardni profil	27
PFA TOP 240/250/260	Standardni profil	28
Schlemmer Gigant	NW 70 + NW 95	29
Specijalne rebraste cijevi		
Samozatvarajuće		30
Zabravljujuće		31
Otporne na glodavce		32
Polyflex Twin NOVO	PA6 HB	33
	PA6 VO	34
	PPmod	35
	PP-UV	36
Alati		
Alati za montažu		37
Alati za rezanje		38

Corrugated Tubes

		page
Overviews		
Tubes + Accessories		4 - 5
Characteristics		6 - 7
Profiles		8
Corrugated Tubes		
Poly-Tyl (LD-PE)	Normal profile	9
PA 12	Normal profile	10
PP	Normal profile	11
	AHW (Automotive High Wave)	11
	High Flex	11
	UFW (Ultra Flat Wave)	11
PP GM	Normal profile	12
	AHW (Automotive High Wave)	12
	High Flex	12
	UFW (Ultra Flat Wave)	12
PA 6 HB	Normal profile	13
	UFW (Ultra Flat Wave)	14
	Light	15
	Heavy/Rough	16
PA 6 VO	Normal profile	17
	UFW (Ultra Flat Wave)	18
PP-BS	Normal profile	19
	AHW (Automotive High Wave)	19
	High Flex	19
	UFW (Ultra Flat Wave)	20
	JIS (Japanese Industrial Standard)	20
PPmod	Normal profile	21
	AHW (Automotive High Wave)	21
	UFW (Ultra Flat Wave)	21
PAER	Normal profile	22
	AHW (Automotive High Wave)	22
	High Flex	22
	UFW (Ultra Flat Wave)	22
TPE (Hytrel)	Normal profile	23
TPC (Permaflex)	Normal profile NEW	24
TPC-EE (Arnitel)	Normal profile	25
	AHW (Automotive High Wave)	25
	UFW (Ultra Flat Wave)	25
TPC-ES (Arnitel C)	Normal profile	26
	UFW (Ultra Flat Wave)	26
ETFE TOP 200	Normal profile	27
PFA TOP 240/250/260	Normal profile	28
Schlemmer Gigant	NW 70 + NW 95	29
Special Corrugated Tubes		
Selfclosing		30
Lockable		31
Marten proof		32
Polyflex Twin NEW	PA6 HB	33
	PA6 VO	34
	PPmod	35
	PP-UV	36
Tools		
Assembly Tools		37
Cutting Tools		38

Cijevi + pribor / Tubes + Accessories

2.1

poglavlje 2.1 Chapter 2.1

Cijevi rebraste
Corrugated Tubes

Standardne
AHW

UFW (Ultra Flat Wave)

samozatvarajuće
selfclosing

zabravljujuće
lockable

poglavlje 2.2 Chapter 2.2

NH cijevne uvodnice
NH Cable Gland

za standradni profil
for Normal Profile

ravna
straight

90° kutna
90° angle

poglavlje 2.2 Chapter 2.2

SEM-FAST

za standardni + UFW profil
for normal + UFW Profile

ravna
straight

90° koljeno
90° elbow

kombinirana
Combi

poglavlje 2.3 Chapter 2.3

Razdjelnici
Manifolds

poglavlje 2.3 Chapter 2.3

Zaštitni pokrovi za utikače
Connector Interfaces

poglavlje 2.5 Chapter 2.5

Spojnice
Connectors

ravna
straight

90° kutna
90° angle

poglavlje 2.5 Chapter 2.5

Redukcije
Reducers

---

poglavlje 2.1 Chapter 2.1

Schlemmer Gigant

poglavlje 2.2 Chapter 2.2

Pričvrsnice
Fixings

ravna
straight

90° kutna
90° angle

Spojnica
Sleeve

ravni
straight

Obujmice
Gripping Clamps

---

poglavlje 2.2 Chapter 2.2

Rakkordflex SF

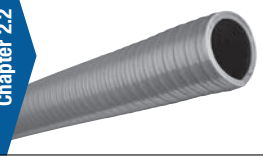

poglavlje 2.2 Chapter 2.2

NH cijevne uvodnice
NH Cable Gland

PG - Metrički
PG - Metric

ravna
straight

90° kutna
90° angle

---

poglavlje 2.2 Chapter 2.2

Rakkord (Vinnylan)

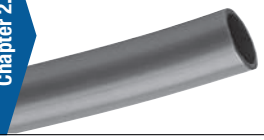

poglavlje 2.2 Chapter 2.2

KSV uvodnice
Special glands KSV

PG - Metrički
PG - Metric

---

poglavlje 2.2 Chapter 2.2

Schlemmer Flex KUW-PVC

Schlemmer Flex K-PVC

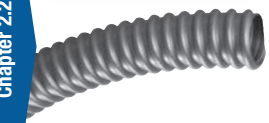

Schlemmer Flex KUW-PUR

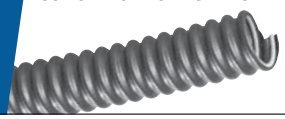

poglavlje 2.2 Chapter 2.2

LK uvodnice
LK glands

PG - Metrički
PG - Metric

Cijevi + pribor / Tubes + Accessories

poglavlje 2.2
Chapter 2.2

Cijevi metalne / Metal tubes:
MS-B / bare MS-B
MS-DU
MS-PVC-DU

poglavlje 2.2
Chapter 2.2

Cijevna uvodnica Rakkord
Conduit Gland Rakkord

Tip 30
PG - Metrički
PG - Metric

Tip 31
PG

Tip 33
PG

Tip 36
PG - Metrički
PG - Metric

Tip 40
PG - Metrički
PG - Metric

Tip 41
PG

Tip 43
PG

Tip 46
PG - Metrički
PG - Metric

poglavlje 2.2
Chapter 2.2

Cijevi metalne / Metal tubes:
MS-PVC
MS-PU

poglavlje 2.2
Chapter 2.2

Cijevna uvodnica Rakkord
Conduit Gland Rakkord

Tip 30
PG - Metrički
PG - Metric

Tip 31
PG

Tip 33
PG

Tip 36
PG - Metrički
PG - Metric

Tip 40
PG - Metrički
PG - Metric

Tip 41
PG

Tip 43
PG

Tip 46
PG - Metrički
PG - Metric

Cijevna uvodnica FD
Conduit Gland FD

Metrički / Metric

ravna
straight

45° kutna
45° angle

90° kutna
90° angle

poglavlje 2.2
Chapter 2.2

Cijevi metalne / Metal tubes:
Anaconda Sealtite
E.F/H.C./U.I./U.I.G./O.R./
H.T.D.L./N.M.U.A./H.C.X/H.F.X.

poglavlje 2.2
Chapter 2.2

Cijevne uvodnice / Conduit Glands

PG - Metričke / Metric

ravna
straight

45° kutna
45° angle

90° kutna
90° angle

ravna s unutarnjim navojem
straight internal thread

kombinirana
Combi

poglavlje 2.2
Chapter 2.2

Cijevi metalne / Metal tubes:
Rakkord DU (Vinnylan-DU)

poglavlje 2.2
Chapter 2.2

Specijalne uvodnice serije 75
Special gland series 75

PG - Metrički
PG - Metric

2.1

Svojstva rebrastih cijevi / Corrugated Tubes Characteristics

materijal material	temperatura temperature	profili profiles	gorivost po FMVSS 302 Inflammability acc. to FMVSS 302	UL 94: UL 94:
Poly-Tyl (LD-PE)	od -40°C do 80°C	Standardni / Normal	< 100 mm/min. / < 100 mm/min.	HB
		Gigant	< 100 mm/min. / < 100 mm/min.	
PA 12	od -40°C do 100°C	Standardni / Normal	< 100 mm/min. / < 100 mm/min.	HB
PP-UV	od -40°C do 100°C	Twin	< 100 mm/min. / < 100 mm/min.	
PP	od -40°C do 105°C	Standardni / Normal	< 100 mm/min. / < 100 mm/min.	HB
		AHW (Automotive High Wave)	< 100 mm/min. / < 100 mm/min.	
		High Flex	< 100 mm/min. / < 100 mm/min.	
		UFW (Ultra Flat Wave)	< 100 mm/min. / < 100 mm/min.	
PP GM	od -40°C do 105°C	Standardni / Normal	samogasivo / selfextinguishing	HB
		AHW (Automotive High Wave)	samogasivo / selfextinguishing	
		High Flex	samogasivo / selfextinguishing	
		UFW (Ultra Flat Wave)	samogasivo / selfextinguishing	
PA 6 HB	od -40°C do 120°C	Standardni / Normal	< 100 mm/min. / < 100 mm/min.	HB
		UFW (Ultra Flat Wave)	< 100 mm/min. / < 100 mm/min.	
		Lagan / Light	< 100 mm/min. / < 100 mm/min.	
		Težak / Heavy	< 100 mm/min. / < 100 mm/min.	
		Gigant	< 100 mm/min. / < 100 mm/min.	
		Twin	< 100 mm/min. / < 100 mm/min.	
PA 6 VO	od -40°C do 120°C	Standardni / Normal	samogasivo / selfextinguishing	VO
		UFW (Ultra Flat Wave)	samogasivo / selfextinguishing	
		Twin	samogasivo / selfextinguishing	
TPU (PUR)	od -40°C do 125°C	Gigant	< 100 mm/min. / < 100 mm/min.	HB
PP-BS	od -40°C do 125°C	Standardni / Normal	samogasivo / selfextinguishing	HB
		AHW (Automotive High Wave)	samogasivo / selfextinguishing	
		High Flex	samogasivo / selfextinguishing	
		UFW (Ultra Flat Wave)	samogasivo / selfextinguishing	
		JIS (Japanese Industrial Standard)	samogasivo / selfextinguishing	
		samozatvarajući / selfclosing	samogasivo / selfextinguishing	
		zabravljujući / lockable	samogasivo / selfextinguishing	
PPmod	od -40°C do 135°C	Standardni / Normal	samogasivo / selfextinguishing	V2
		AHW (Automotive High Wave)	samogasivo / selfextinguishing	
		UFW (Ultra Flat Wave)	samogasivo / selfextinguishing	
		Gigant	samogasivo / selfextinguishing	
		Twin	samogasivo / selfextinguishing	
		samozatvarajući / selfclosing	samogasivo / selfextinguishing	
		zabravljujući / lockable	samogasivo / selfextinguishing	
PAER	od -40°C do 150°C	Standardni / Normal	samogasivo / selfextinguishing	HB
		AHW (Automotive High Wave)	samogasivo / selfextinguishing	
		High Flex	samogasivo / selfextinguishing	
		UFW (Ultra Flat Wave)	samogasivo / selfextinguishing	
		samozatvarajući / selfclosing	samogasivo / selfextinguishing	
		zabravljujući / lockable	samogasivo / selfextinguishing	
TPE (Hytrel)	od -40°C do 150°C	Standardni sa zaštitom od požara / with fire protection	samogasivo / selfextinguishing	–
		Standardni bez zaštite od požara / no fire protection	< 100 mm/min. / < 100 mm/min.	
TPC Permaflex	od -40°C do 150°C	Standardni bez zaštite od požara / no fire protection	< 100 mm/min. / < 100 mm/min.	–
TPC-EE (Arnitel)	od -40°C do 175°C	Standardni / Normal	< 100 mm/min. / < 100 mm/min.	–
		AHW (Automotive High Wave)	samogasivo / selfextinguishing	
		UFW (Ultra Flat Wave)	samogasivo / selfextinguishing	
TPC-ES (Arnitel C)	od -40°C do 175°C	Standardni / Normal	< 100 mm/min. / < 100 mm/min.	–
ETFE-TOP 200	od -40°C do 200°C	Standardni / Normal	samogasivo / selfextinguishing	VO
PFA-TOP 240	od -40°C do 240°C	Standardni / Normal	samogasivo / selfextinguishing	VO
PFA-TOP 250	od -40°C do 250°C	Standardni / Normal	samogasivo / selfextinguishing	VO
PFA-TOP 260	od -40°C do 260°C	Standardni / Normal	samogasivo / selfextinguishing	VO

Svojstva rebrastih cijevi / Corrugated Tubes Characteristics

materijal material	savitljivost flexibility	mehanička zaštita mechanical protection
Poly-Tyl (LD-PE)	●●●●●○○	●●●●○○○
	●●●●●●○	●●●○○○○
PA 12	●●●●●○○	●●●●●●○
PP-UV	●●●○○○○	●●●○○○○
PP	●●●○○○○	●●●●●○○
	●●●●●●●	●●●●●●○
	●●●●●●●	●●●●●●●
	●●●●●●○	●●●●●●●
PP GM	●●●●●○○	●●●●●○○
	●●●●●●●	●●●●●●○
	●●●●●●●	●●●●●●●
	●●●●●●○	●●●●●●○
PA 6 HB	●●●○○○○	●●●●●●●
	●●●●○○○	●●●●●●●
	●●●●●●●	●●●○○○○
	●●○○○○○	●●●●●●●
	●●○○○○○	●●●●●●●
	●●●○○○○	●●●○○○○
PA 6 VO	●●●○○○○	●●●●●●●
	●●●●○○○	●●●●●●●
	●●●○○○○	●●●●●●●
TPU (PUR)	●●●●●●●	●●●●○○○
PP-BS	●●●●●○○	●●●●●○○
	●●●●●●●	●●●●●●○
	●●●●●●●	●●●●●●●
	●●●●●●○	●●●●●●●
	●●●●●○○	●●●●●○○
	●●●●●○○	●●●●●●●
	●●●●●●○	●●●●●●●
PPmod	●●●●●○○	●●●●●○○
	●●●●●●●	●●●●●●○
	●●●●●●○	●●●●●●●
	●●●●●○○	●●●●○○○
	●●●○○○○	●●●●●●●
	●●●●●○○	●●●●●●●
	●●●●●●○	●●●●●●●
PAER	●●●○○○○	●●●●●●●
	●●●●●○○	●●●●●●●
	●●●●●●●	●●●●●●●
	●●●●●●○	●●●●●●●
	●●●○○○○	●●●●●●●
	●●●●●○○	●●●●●●●
TPE (Hytrel)	●●●●●○○	●●●○○○○
TPC Permaflex	●●●●●○○	●●●○○○○
TPC-EE (Arnitel)	●●●●●○○	●●●○○○○
	●●●●●●●	●●●●●●○
	●●●●●●○	●●●●●●○
TPC-ES (Arnitel C)	●●●●●○○	●●●○○○○
ETFE-TOP 200	●●●●●○○	●●●●●○○
PFA-TOP 240	●●●●●○○	●●●●●○○
PFA-TOP 250	●●●●●○○	●●●●●○○
PFA-TOP 260	●●●●●○○	●●●●●○○

Rez na vrhu rebra / Cut on the crest

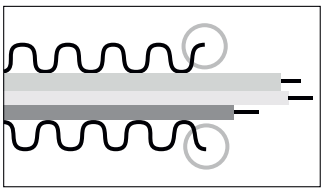

Sve Schlemmer rebraste cijevi prerezane su na vrhu rebra.

Prednost:
Na taj način izbjegava se oštećenje izolacije vodiča u cijevi.

All Schlemmer corrugated tubes are cut on the crest.

Advantage:
This avoids the abrasion of inside lying wires.

Izvedbe cijevi i pakiranja / Designs:

Jedinice pakiranja:

- kontejner
- koluti
- komadno rezane

Izvedbe cijevi:

- razrezane
- nerazrezane
- perforirane

Materijali:
Dodatni materijali na upit

Package units:

- Container
- Coils (Rings)
- Cutted lengths

Designs:

- Slit
- Unslit
- Perforated

Materials:
Further Materials on request

●●●●●●● = Maximum

2.1

Profili rebrastih cijevi / Corrugated Tube Profiles

2.1

Standardni profil

- najekonomičnija cijev
- mali vanjski promjer
- upotrebljivi Schlemmer razdjelnici i pribor

Normal

- Most economical tube
- Small outer diameter
- Schlemmer Manifolds and Accessories usable

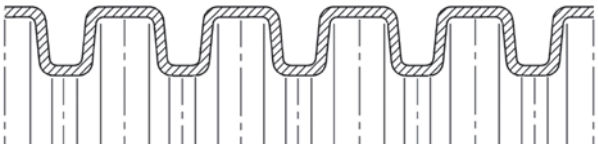

AHW - profil s visokim rebrima za autoindustriju

- visoka otpornost na tlak
- veoma savitljive
- upotrebljivi Schlemmer razdjelnici i pribor

Automotive High Wave

- High pressure strength
- Very flexible
- Schlemmer Manifolds and Accessories usable

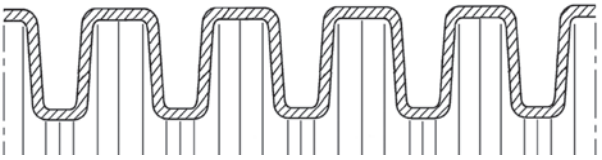

UFW - profil sa izuzetno ravnim rebrima

- ravna unutarnja rebra kao zaštita za vodiče od vibracija
- velika unutarnja dodirna površina
- izvrsna savitljivost kod malih radijusa savijanja
- visoka otpornost na tlak
- upotrebljivi Schlemmer razdjelnici i pribor

Ultra Flat Wave

- Flat inner wave as vibration protection for wires
- Big inner contact surface
- Excellent Flexibility for small bending radii
- High pressure strength
- Schlemmer Manifolds and Accessories usable

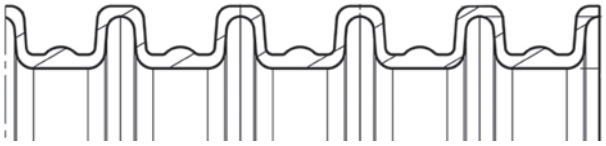

High Flex - profil visoke savitljivosti

- visoka otpornost na tlak
- veoma savitljive
- standardni Schlemmer razdjelnici i pribor nisu upotrebljivi
- poseban pribor na upit

High Flex

- High pressure strength
- Very flexible
- Schlemmer standard Manifolds and Accessories not usable
- Special Accessories on request

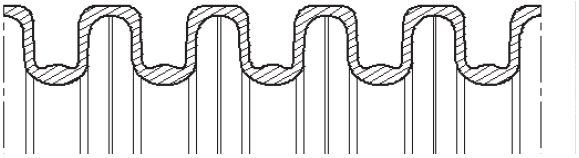

JIS - japanski industrijski standard

- odgovara japanskim industrijskim standardima
- mali vanjski promjer
- svojstva jednaka kao i kod standardnog profila
- standardni Schlemmer razdjelnici i pribor nisu upotrebljivi
- poseban pribor na upit

Japanese Industrial Standard

- Corresponds with Japanese Standards
- Small outer diameter
- Characteristics similar as Normal Profile
- Schlemmer standard Manifolds and Acessories not usable
- Special Accessories on request

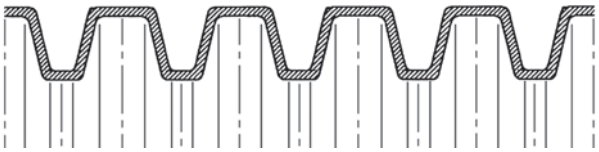

Grubi profil

- visoka otpornost na udarce
- mali radijus savijanja
- visoka otpornost na tlak
- debele stjenke
- upotrebljivi Schlemmer razdjelnici i pribor

Rough

- High impact resistance
- Small bending radius
- High pressure strength
- Thick walled
- Schlemmer Manifolds and Accessories usable

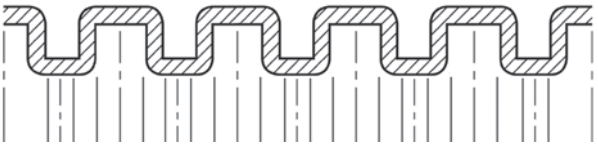

Profil otporan na glodavce

- otporan na ugrize glodavaca
- minimalni otvor razreza
- idealan za rekonstrukcije i popravke
- nije potreban pribor i alati za montažu

Marten proof

- Marten bite proof
- Minimum slit opening
- Ideal for retrofit and repair
- No accessories an assembly tools required

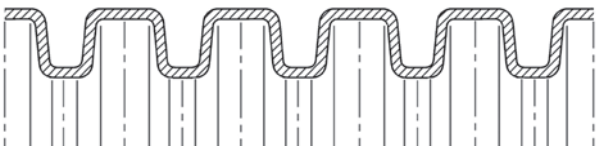

Twin

- dvodjelni, zatvarajući
- visoka otpornost na udarce i istezanje pri niskim temperaturama
- upotrebljivi Schlemmer razdjelnici i pribor

Twin

- Two-piece design, closable
- High low-temperature impact strength and ultimate elongation
- Schlemmer Manifolds and Accessories usable

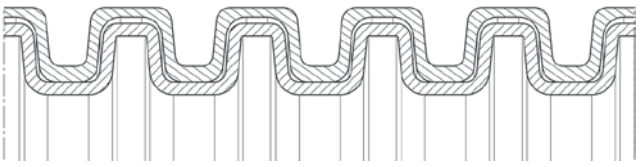

POLYFLEX®

Poly-Tyl (LD-PE)

Standardni profil

RoHS

Materijal:
polietilen LD-PE

Radna temperatura:
3000 h: -40°C do 80°C
240 h: -40°C do 90°C

Gorivost:
- UL 94: HB
- prema FMVSS 302: < 100 mm/min.

Boje/izvedbe/pakiranja:
- crna, siva, ostale na upit
- komadno rezane na upit

Svojstva:
- visoka otpornost na promjene temperature okoline i istezanje
- visoka čvrstoća
- otporne na savijanje
- izvrsna kemijska otpornost
- otporne na kiselinu
- veoma savitljive

Upotreba:
- razvodni ormari
- industrija kućanskih aparata
- tehnologija grijanja i klimatizacije
- elektro industrija
- brodogradnja i proizvodnja vlakova

POLYFLEX®

Poly-Tyl (LD-PE)

Normal Profile

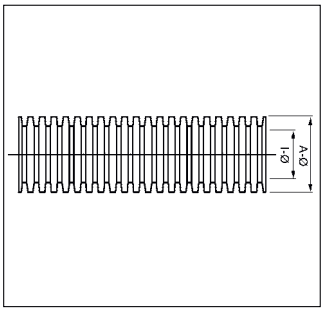

Material:
Polyethylene LD-PE

Temperature range:
3000 h: -40°C to 80°C
240 h: -40°C to 90°C

Inflammability:
- UL 94: HB
- acc. to FMVSS 302: < 100 mm/min.

Colour(s)/Designs:
- Black, grey, others on request
- Cutted lengths on request

Characteristics:
- High cold impact strength and ultimate elongation
- High strength
- Bending stabile
- Excellent chemical resistance
- Acid-proof
- Very flexible

Applications:
- Switch cabinets
- Home appliance industry
- Heating and airconditioning installations
- Electrical industry
- Ship and train building

2.1

				kolut/Coil		
NW NW	Profil profile	A mm A mm	I mm I mm	Broj artikla nerazrezane crna Art. no. unslit black	Broj artikla nerazrezane siva Art. no. unslit grey	JP m PU m
7,5	Standardni /normal	9,9	6,5	1919899	-	50
8,5	Standardni /normal	11,3	8,4	1919902	1919805	50
10	Standardni /normal	13,1	9,8	1919903	1919806	50
12	Standardni /normal	15,6	11,6	1919890	1919807	50
13	Standardni /normal	15,8	12,3	1919911	1919814	50
14	Standardni /normal	18,3	14,1	1919912	1919815	50
16	Standardni /normal	18,6	14,7	1919913	1919816	50
17	Standardni /normal	20,8	16,3	1919920	1919822	50
19	Standardni /normal	24,0	19,1	1919925	-	50
22	Standardni /normal	25,4	21,2	1919938	1919830	50
23	Standardni /normal	28,1	22,5	1919946	1919849	50
26	Standardni /normal	31,0	25,5	1919947	1919850	25
29	Standardni /normal	34,2	29,0	1919954	1919857	25
37	Standardni /normal	41,6	35,9	1919962	1919865	25
50	Standardni /normal	53,3	47,1	1919970	1919873	25

POLYFLEX®

PA12

Standardni profil

POLYFLEX®

PA12

Normal Profile

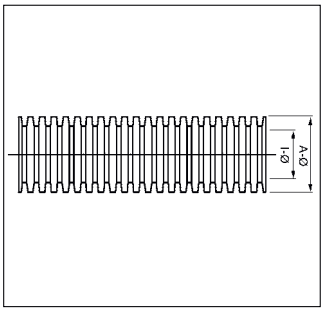

2.1

RoHS

Materijal:
poliamid 12

Radna temperatura:
3000 h: -40°C do 100°C
240 h: -40°C do 130°C

Gorivost:
- UL 94: HB
- prema FMVSS 302: < 100 mm/min.

Boje/izvedbe/pakiranja:
- crna, siva, ostale na upit
- komadno rezane na upit

Svojstva:
- visoka otpornost na promjene temperature okoline
- visoka čvrstoća
- otporne na savijanje
- izvrsna kemijska otpornost
- izuzetno savitljive
- UV otpornost
- bez halogena
- visoka preciznost izrade
- dobra mehanička svojstva

Upotreba:
- industrija vozila
- izrada strojeva
- industrija kućanskih aparata
- tehnologija grijanja i klimatizacije
- robotika

Material:
Polyamide 12

Temperature range:
3000 h: -40°C to 100°C
240 h: -40°C to 130°C

Inflammability:
- UL 94: HB
- acc. to FMVSS 302: < 100 mm/min.

Colour(s)/Designs:
- Black, grey, others on request
- Cutted lengths on request

Characteristics:
- High cold impact strength
- High strength
- Bending stabile
- Excellent chemical resistance
- Highly flexible
- UV resistant
- Free of halogen
- High accurate to gauge
- Good mechanical properties

Applications:
- Vehicle Industries
- Machine building
- Home appliance industry
- Heating and aircondition technology
- Robotics

				kolut/Coil		
NW NW	Profil profile	A mm A mm	I mm I mm	Broj artikla nerazrezane crna Art. no. unslit black	Broj artikla nerazrezane siva Art. no. unslit grey	JP m PU m
4,5	Standardni /normal	7,1	5,0	-	1240040	100
7,5	Standardni /normal	10,0	6,9	1240607	1240072	50
8,5	Standardni /normal	11,7	8,4	1240608	1240080	50
10	Standardni /normal	13,0	9,9	1240610	1240102	50
12	Standardni /normal	15,7	12,2	1240612	1240129	50
13	Standardni /normal	15,8	12,7	1240613	1240137	50
14	Standardni /normal	18,5	14,2	1240614	1240145	50
17	Standardni /normal	21,2	16,6	1240617	1240170	50
22	Standardni /normal	25,4	21,4	1240622	1240226	50
23	Standardni /normal	28,3	23,2	1240623	1240234	50
29	Standardni /normal	34,5	29,0	1240629	1240293	25
37	Standardni /normal	42,4	36,0	1240637	1240374	25
50	Standardni /normal	54,0	47,7	1240650	1240501	25

POLYFLEX®

PP

Standardni profil
AHW
High Flex
UFW

RoHS

Materijal:
polipropilen

Radna temperatura:
3000 h: -40°C do 105°C
350 h: -40°C do 135°C

Gorivost:
- UL 94: HB
- prema FMVSS 302: < 100 mm/min.

Boje/izvedbe/pakiranja:
- crna, ostale na upit
- komadno rezane na upit

POLYFLEX®

PP

Normal Profile
AHW
High Flex
UFW

Svojstva:
- visoka otpornost oblika na toplinu
- enormna otpornost na promjene temperature okoline
- visoka čvrstoća
- otporne na savijanje
- izvrsna kemijska otpornost
- UV otpornost

Upotreba:
- industrija vozila
- AHW-Profil: preporučljiv za male radijuse savijanja

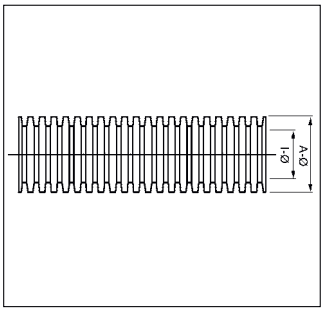

Material:
Polypropylene

Temperature range:
3000 h: -40°C to 105°C
350 h: -40°C to 135°C

Inflammability:
- UL 94: HB
- acc. to FMVSS 302: < 100 mm/min.

Colour(s)/Designs:
- Black, others on request
- Cutted lengths on request

Characteristics:
- Great shape permanence to heat
- Enourmous cold impact strength
- High strength
- Bending stabile
- Excellent chemical resistance
- UV resistant

Applications:
- Vehicle Industries
- AHW-Profile: for small bending radii recommended

				kontejner/Container				kolut/Coil		
NW NW	Profil profile	A mm A mm	I mm I mm	Broj artikla razrezane crna Art. no. slit black	JP m PU m	Broj artikla nerazrezane crna Art. no. unslit black	JP m PU m	Broj artikla razrezane crna Art. no. slit black	Broj artikla nerazrezane crna Art. no. unslit black	JP m PU m
3	Standardni /normal	5,1	2,8	1951003	18000	1951139	18000	1926653	1926603	200
4,5	Standardni /normal	7,1	5,0	1951004	10000	1951140	9000	1926654	1926604	100
6	Standardni /normal	9,2	6,0	1951006	5000	1951141	5000	1926656	1926606	100
7,5	Standardni /normal	9,9	6,9	1951007	5000	1951142	5000	1926657	1926607	50
8,5	Standardni /normal	11,6	8,5	1951008	4000	1951143	3300	1926658	1926608	50
10	Standardni /normal	12,7	10,1	1951010	3300	1951144	3000	1926660	1926610	50
12	Standardni /normal	15,6	12,0	1951012	2200	1951145	2200	1926662	1926612	50
13	Standardni /normal	15,8	12,9	1951013	2200	1951146	2000	1926663	1926613	50
14	Standardni /normal	18,3	14,5	1951014	1700	1951147	1700	1926664	1926614	50
16	Standardni /normal	18,8	15,2	1951016	1500	1951148	1500	1926666	1926616	50
17	Standardni /normal	21,0	16,8	1951017	1300	1951149	1100	1926667	1926617	50
19	Standardni /normal	24,0	19,4	1951019	1000	1951150	800	1926669	1926619	50
22	Standardni /normal	25,5	21,8	1951022	900	1951151	700	1926672	1926622	50
23	Standardni /normal	28,0	23,7	1951023	700	1951152	650	1926673	1926623	50
26	Standardni /normal	31,3	26,4	1951026	600	1951153	600	1926676	1926626	25
29	Standardni /normal	33,9	29,3	1951029	500	1951154	450	1926679	1926629	25
37	Standardni /normal	42,0	36,7	1951037	300	1951155	250	1926687	1926637	25
50	Standardni /normal	53,6	47,8	1951050	200	1951156	150	1926690	1926650	25
4,5	AHW/ AHW	7,1	5,0	1951104	10000	1951160	9000	1927904	1927964	100
6	AHW/ AHW	9,2	6,0	1951106	5000	1951161	5000	1927906	1927966	100
8,5	AHW/ AHW	12,9	8,5	1951108	3300	1951164	3000	1927908	1927968	50
11	AHW/ AHW	15,7	11,1	1951111	2200	1951165	2000	1927911	1927971	50
15	AHW/ AHW	21,2	15,0	1951115	1300	1951167	1100	1927915	1927975	50
19	AHW/ AHW	25,7	19,1	1951119	900	1951168	700	1927919	1927979	50
26	AHW/ AHW	31,4	26,3	1951126	500	-	-	1927926	1927986	25
34	AHW/ AHW	39,5	34,1	1951134	300	1951172	250	1927934	1927994	25
13	High Flex/ High Flex	18,4	13,9	1926063	1700	1926073	1700	1926023	1926033	50
19	High Flex/ High Flex	24,0	18,8	1926049	900	1926059	700	1926029	1926039	50
23	High Flex/ High Flex	28,5	23,5	1926083	600	1926093	500	1926043	1926053	50
4,5	UFW/ UFW	7,2	4,7	1951644	10000	1951604	9000	1951724	1951684	100
7,5	UFW/ UFW	10,0	6,4	1951647	5000	1951607	5000	1951727	1951687	50
8,5	UFW/ UFW	11,9	8,4	1951648	4000	1951608	3300	1951728	1951688	50
10	UFW/ UFW	13,0	9,3	1951650	3300	1951610	3000	1951730	1951690	50
13	UFW/ UFW	15,8	12,4	1951653	2200	1951613	2000	1951733	1951693	50
17	UFW/ UFW	21,1	16,2	1951657	1300	1951617	1100	1951737	1951697	50
19	UFW/ UFW	23,6	18,8	1951659	900	1951619	700	1951739	1951699	50
22	UFW/ UFW	25,5	20,1	1951662	800	1951622	700	1951742	1951702	50
23	UFW/ UFW	28,5	22,6	1951663	700	1951623	650	1951743	1951703	50
26	UFW/ UFW	31,4	25,1	1951666	600	1951626	600	1951746	1951706	25
29	UFW/ UFW	34,5	28,5	1951669	500	1951629	450	1951749	1951709	25
37	UFW/ UFW	42,2	35,5	1951677	300	1951637	250	1951757	1951717	25

2.1

POLYFLEX®

PP GM

Standardni profil
AHW
High Flex
UFW

RoHS

Materijal:
polipropilen GM

Radna temperatura:
3000 h: -40°C do 105°C
240 h: -40°C do 125°C

Gorivost:
- UL 94: HB
- prema FMVSS 302: samogasiva

Boje/izvedbe/pakiranja:
- crna, ostale na upit
- komadno rezane na upit

POLYFLEX®

PP GM

Normal Profile
AHW
High Flex
UFW

Svojstva:
- visoka otpornost oblika na toplinu
- enormna otpornost na promjene temperature okoline
- visoka čvrstoća
- otporne na savijanje
- izvrsna kemijska otpornost
- UV otpornost

Upotreba:
- industrija vozila
- AHW-Profil: preporučljiv za male radijuse savijanja

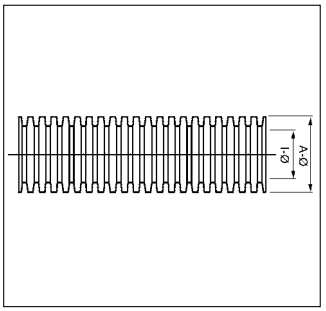

Material:
Polypropylene GM

Temperature range:
3000 h: -40°C to 105°C
240 h: -40°C to 125°C

Inflammability:
- UL 94: HB
- acc. to FMVSS 302: selfextinguishing

Colour(s)/Designs:
- Black, others on request
- Cutted lengths on request

Characteristics:
- Great shape permanence to heat
- Enourmous cold impact strength
- High strength
- Bending stabile
- Excellent chemical resistance
- UV resistant

Applications:
- Vehicle Industries
- AHW-Profile: for small bending radii recommended

				kontejner/Container				kolut/Coil		
NW NW	Profil profile	A mm A mm	I mm I mm	Broj artikla razrezane crna Art. no. slit black	JP m PU m	Broj artikla nerazrezane crna Art. no. unslit black	JP m PU m	Broj artikla razrezane crna Art. no. slit black	Broj artikla nerazrezane crna Art. no. unslit black	JP m PU m
3	Standardni /normal	5,1	2,8	1930503	18000	1930903	18000	1929653	1929703	200
4,5	Standardni /normal	7,1	5,0	1930504	10000	1930904	9000	1930804	1930854	100
6	Standardni /normal	9,2	6,0	1930506	5000	1930906	5000	1930806	1930856	100
7,5	Standardni /normal	9,9	6,9	1930507	5000	1930907	5000	1930807	1930857	50
8,5	Standardni /normal	11,6	8,5	1930508	4000	1930908	3300	1930808	1930858	50
10	Standardni /normal	12,7	10,1	1930510	3300	1930910	3000	1930810	1930860	50
12	Standardni /normal	15,6	12,0	1930512	2200	1930912	2200	1930812	1930862	50
13	Standardni /normal	15,8	12,9	1930513	2200	1930913	2000	1930813	1930863	50
14	Standardni /normal	18,3	14,5	1930514	1700	1930914	1700	1930814	1930864	50
16	Standardni /normal	18,8	15,2	1930516	1700	1930916	1500	1930816	1930866	50
17	Standardni /normal	21,0	16,8	1930517	1300	1930917	1100	1930817	1930867	50
19	Standardni /normal	24,0	19,4	1930519	1000	1930919	700	1930819	1930869	50
22	Standardni /normal	25,5	21,8	1930522	900	1930922	700	1930822	1930872	50
23	Standardni /normal	28,0	23,7	1930523	700	1930923	650	1930823	1930873	50
26	Standardni /normal	31,3	26,4	1930526	550	1930926	500	1930826	1930876	25
29	Standardni /normal	33,9	29,3	1930529	500	1930929	450	1930829	1930879	25
37	Standardni /normal	42,0	36,7	1930537	300	1930937	250	1930837	1930887	25
50	Standardni /normal	53,6	47,8	1930550	200	1930950	150	1930850	1930890	25
4,5	AHW/ AHW	7,1	5,0	1929604	10000	1929754	9000	1929654	1929704	100
6	AHW/ AHW	9,2	6,0	1929606	5000	1929756	5000	1929656	1929706	100
8,5	AHW/ AHW	12,9	8,5	1929608	3300	1929758	3000	1929658	1929708	50
11	AHW/ AHW	15,7	11,1	1929611	2200	1929761	2000	1929661	1929711	50
15	AHW/ AHW	21,2	15,0	1929615	1300	1929765	1100	1929665	1929715	50
19	AHW/ AHW	25,7	19,1	1929619	900	1929769	700	1929669	1929719	50
26	AHW/ AHW	31,4	26,3	1929626	500	1929766	450	1929676	1929726	25
34	AHW/ AHW	39,5	34,1	1929634	300	1929774	200	1929684	1929734	25
13	High Flex/ High Flex	18,4	13,9	1939153	1700	1939143	1700	1939053	1939043	50
19	High Flex/ High Flex	24,0	18,8	1939159	900	1939149	700	1939069	1939059	50
23	High Flex/ High Flex	28,5	23,5	1939173	600	1939163	500	1939073	1939063	50
4,5	UFW/ UFW	7,2	4,7	1952304	9000	1952204	9000	1952104	1952004	100
7,5	UFW/ UFW	10,0	6,4	1952307	5000	1952207	5000	1952107	1952007	50
8,5	UFW/ UFW	11,9	8,4	1952308	3300	1952208	3300	1952108	1952008	50
10	UFW/ UFW	13,0	9,3	1952310	3000	1952210	3000	1952110	1952010	50
13	UFW/ UFW	15,8	12,4	1952313	2000	1952213	2000	1952113	1952013	50
17	UFW/ UFW	21,1	16,2	1952317	1100	1952217	1100	1952117	1952017	50
19	UFW/ UFW	23,6	18,8	1952319	900	1952219	700	1952119	1952019	50
22	UFW/ UFW	25,5	20,1	1952322	700	1952222	700	1952122	1952022	50
23	UFW/ UFW	28,5	22,6	1952323	650	1952223	650	1952123	1952023	50
26	UFW/ UFW	31,4	25,1	1952326	600	1952226	600	1952126	1952026	25
29	UFW/ UFW	34,5	28,5	1952329	500	1952229	450	1952129	1952029	25
37	UFW/ UFW	42,2	35,5	1952337	250	1952237	250	1952137	1952037	25

POLYFLEX®

PA6 HB

Standardni profil

RoHS | GGVS | NFR | DVE

Materijal:
poliamid 6

Radna temperatura:
3000 h: -40°C do 120°C
240 h: -40°C do 150°C

Gorivost:
- UL 94: HB
- prema FMVSS 302: < 100 mm/min.

Boje/izvedbe/pakiranja:
- crna, siva, ostale na upit
- komadno rezane na upit

POLYFLEX®

PA6 HB

Normal Profile

Svojstva:
- nije potrebno omatanje samoljepljivom trakom na početku ili na kraju kabla
- UV otpornost
- bez halogena

Upotreba:
- za visoka mehanička naprezanja
- motorni prostor i karoserija
- građevinski strojevi i strojevi
- brodogradnja i proizvodnja vlakova
- razvodni ormari

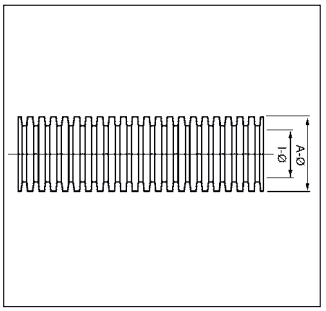

Material:
Polyamide 6

Temperature range:
3000 h: -40°C to 120°C
240 h: -40°C to 150°C

Inflammability:
- UL 94: HB
- acc. to FMVSS 302: < 100 mm/min.

Colour(s)/Designs:
- Black, grey, others on request
- Cutted lengths on request

Characteristics:
- No wrapping tape necessary at cable feeders or cable ends
- UV resistant
- Free of halogen

Applications:
- For high mechanical stresses
- Body section and chassis
- Construction machinery and machinery
- Ship- and trainbuilding
- Switch cabinet

2.1

				kontejner/Container						kolut veliki/Coil large		kolut mali/Coil small				
NW	Profil	A mm	I mm	Broj artikla razrezane crna	m	Broj artikla nerazrezane crna	m	Broj artikla nerazrezane siva	m	Broj artikla nerazrezane crna	m	Broj artikla razrezane crna	Broj artikla nerazrezane crna	m	Broj artikla nerazrezane siva	m
NW	profile	A mm	I mm	Art. no. slit black	m	Art. no. unslit black	m	Art. no. unslit grey	m	Art. no. unslit black	m	Art. no. slit black	Art. no. unslit black	m	Art. no. unslit grey	
3	Normal/normal	5,1	2,8	1205503	18000	1200803	18000	-	-	-	-	1205030	1200073	200	-	
4,5	Normal/normal	7,1	5,0	1205504	10000	1200804	9000	-	-	1200061	200	1205045	1200068	100	-	
6	Normal/normal	9,2	6,0	1205506	5000	1200806	5000	-	-	1200021	200	1205060	1200069	100	-	
7,5	Normal/normal	10,0	6,7	1205507	5000	1200807	5000	1203957	5000	1200037	250	1205072	1200070	50	1203907	50
8,5	Normal/normal	11,7	8,4	1205508	4000	1200808	3300	1203958	3300	1200040	250	1205080	1200089	50	1203908	50
10	Normal/normal	13,0	9,9	1205510	3300	1200810	3000	1203960	3000	1200013	200	1205102	1200100	50	1203910	50
12	Normal/normal	15,7	12,2	1205512	2200	1200812	2200	1203962	2200	1200064	200	1205129	1200127	50	1203912	50
13	Normal/normal	15,8	12,7	1205513	2200	1200813	2000	1203963	2000	1200066	200	1205137	1200135	50	1203913	50
14	Normal/normal	18,5	14,2	1205514	1700	1200814	1700	1203964	1700	1200067	200	1205145	1200143	50	1203914	50
16	Normal/normal	18,9	15,0	1205516	1700	1200816	1100	-	-	1200041	150	1205161	1200160	50	-	-
17	Normal/normal	21,2	16,6	1205517	1300	1200817	1100	1203967	1100	1200016	150	1205170	1200178	50	1203917	50
19	Normal/normal	24,3	19,3	1205519	1000	1200819	800	-	-	1200054	100	1205196	1200194	50	-	-
22	Normal/normal	25,4	21,3	1205522	900	1200822	700	1203972	700	1200022	100	1205226	1200224	50	1203922	50
23	Normal/normal	28,9	23,2	1205523	700	1200823	650	1203973	650	1200023	100	1205234	1200232	50	1203923	50
26	Normal/normal	31,2	25,8	1205526	600	1200826	600	-	-	1200263	50	1205269	1200267	25	-	-
29	Normal/normal	34,5	29,0	1205529	500	1200829	450	1203979	450	1200029	50	1205290	1200291	25	1203929	25
34	Normal/normal	39,0	34,0	1205534	300	-	-	-	-	-	-	1205344	-	-	-	-
37	Normal/normal	42,4	36,0	1205537	300	1200837	250	1203987	250	1200062	30	1205374	1200372	25	1203937	25
50	Normal/normal	54,0	47,7	1205550	200	1200850	150	1203990	150	1200044	30	1205501	1200500	25	1203950	25

POLYFLEX®

PA6 HB

UFW

2.1

RoHS

Materijal:
poliamid 6

Radna temperatura:
3000 h: -40°C do 120°C
240 h: -40°C do 150°C

Gorivost:
- UL 94: HB
- prema FMVSS 302: < 100 mm/min.

Boje/izvedbe/pakiranja:
- crna, siva, ostale na upit
- komadno rezane na upit

POLYFLEX®

PA6 HB

UFW

Svojstva:
- nije potrebno omatanje samoljepljivom trakom na početku ili na kraju kabla
- UV otpornost
- bez halogena

Upotreba:
- za visoka mehanička naprezanja
- motorni prostor i karoserija
- građevinski strojevi i strojevi
- brodogradnja i proizvodnja vlakova
- razvodni ormari

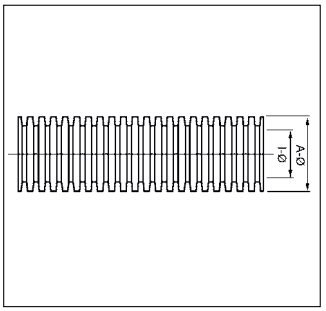

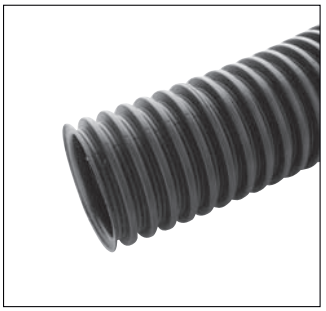

Material:
Polyamide 6

Temperature range:
3000 h: -40°C to 120°C
240 h: -40°C to 150°C

Inflammability:
- UL 94: HB
- acc. to FMVSS 302: < 100 mm/min.

Colour(s)/Designs:
- Black, grey, others on request
- Cutted lengths on request

Characteristics:
- No wrapping tape necessary at cable feeders or cable ends
- UV resistant
- Free of halogen

Applications:
- For high mechanical stresses
- Body section and chassis
- Construction machinery and machinery
- Ship- and trainbuilding
- Switch cabinet

				kontejner/Container				kolut veliki/Coil large				kolut mali/Coil small					
NW mm	Profil mm	A	I	Broj artikla razrezane crna	m	Broj artikla nerazrezane crna	m	Broj artikla nerazrezane crna	m	Broj artikla perforirane crna	m	Broj artikla razrezane crna	Broj artikla nerazrezane crna	Broj artikla nerazrezane siva	m	Broj artikla perforirane crna	m
NW mm	profile mm	A	I	Art. no. slit black	m	Art. no. unslit black	m	Art. no. unslit black	m	Art. no. perforated black	m	Art. no. slit black	Art. no. unslit black	Art. no. unslit grey	m	Art. no. perforated black	m
4,5	UFW/UFW	7,3	4,7	1229304	10000	1229204	9000	1229001	200	-	-	1229104	1229004	1229700	100	-	-
7,5	UFW/UFW	10,1	6,3	1229307	5000	1229207	5000	1229002	250	-	-	1229107	1229007	1229701	50	-	-
8,5	UFW/UFW	12,0	8,2	1229308	4000	1229208	3300	1229003	250	1202630	250	1229108	1229008	1229702	50	1202610	50
10	UFW/UFW	13,1	9,3	1229310	3300	1229210	3000	1229011	200	1202631	200	1229110	1229010	1229703	50	1202611	50
13	UFW/UFW	15,9	12,0	1229313	2200	1229213	2000	1229014	200	1202632	200	1229113	1229013	1229704	50	1202612	50
17	UFW/UFW	21,2	16,0	1229317	1300	1229217	1100	1229005	150	1202633	150	1229117	1229017	1229705	50	1202613	50
19	UFW/UFW	23,7	18,6	1229319	900	1229219	700	1228006	100	-	-	1229119	1229019	1229711	50	-	-
22	UFW/UFW	25,7	19,9	1229322	800	1229222	700	1229012	100	1202634	100	1229122	1229022	1229710	50	1202614	50
23	UFW/UFW	28,6	22,2	1229323	700	1229223	650	1229015	100	-	-	1229123	1229023	1229706	50	-	-
26	UFW/UFW	31,5	24,9	1229326	600	1229226	600	1229016	50	-	-	1229126	1229026	1229707	25	-	-
29	UFW/UFW	34,6	28,4	1229329	500	1229229	450	1229020	50	-	-	1229129	1229029	1229708	25	-	-
37	UFW/UFW	42,3	35,4	1229337	300	1229237	250	1229021	30	-	-	1229137	1229037	1229709	25	-	-

POLYFLEX®

PA6 HB lake

Standardni profil

RoHS

Materijal:
poliamid 6

Radna temperatura:
3000 h: -40°C do 120°C
240 h: -40°C do 150°C

Gorivost:
- UL 94: HB
- prema FMVSS 302: < 100 mm/min.

Boje/izvedbe/pakiranja:
- crna, ostale na upit
- komadno rezane na upit

POLYFLEX®

PA6 HB Light

Normal Profile

Svojstva:
- nije potrebno omatanje samoljepljivom trakom na početku ili na kraju kabla
- UV otpornost prema
- bez halogena

Upotreba:
- za manja mehanička naprezanja
- motorni prostor i karoserija
- građevinski strojevi i strojevi
- brodogradnja i proizvodnja vlakova
- razvodni ormari

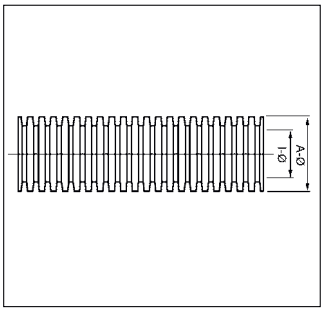

Material:
Polyamide 6

Temperature range:
3000 h: -40°C to 120°C
240 h: -40°C to 150°C

Inflammability:
- UL 94: HB
- acc. to FMVSS 302: < 100 mm/min.

Colour(s)/Designs:
- Black, others on request
- Cutted lengths on request

Characteristics:
- No wrapping tape necessary at cable feeders or cable ends
- UV resistant acc. to
- Free of halogen

Applications:
- For minor mechanical stresses
- Body section and chassis
- Construction machinery and machinery
- Ship- and trainbuilding
- Switch cabinet

2.1

				kontejner / Container				kolut veliki/Coil large		kolut mali/Coil small		
NW NW	Profil profile	A mm A mm	I mm I mm	Broj artikla razrezane crna Art. no. slit black	m m	Broj artikla nerazrezane crna Art. no. unslit black	m m	Broj artikla nerazrezane crna Art. no. unslit black	m m	Broj artikla razrezane crna Art. no. slit black	Broj artikla nerazrezane crna Art. no. unslit black	m m
7,5	Normal/normal	10,0	6,7	1213107	5000	1212607	5000	1212923	250	1213007	1212079	50
8,5	Normal/normal	11,5	8,5	1213108	4000	1212608	3300	1212924	250	1213008	1212850	50
10	Normal/normal	13,2	10,1	1213110	3300	1212610	3000	1212919	200	1213010	1212109	50
12	Normal/normal	15,7	12,5	1213112	2200	1212612	2200	1212925	200	1213012	1212125	50
13	Normal/normal	16,0	13,0	1213113	2200	1212613	2000	1212926	200	1213013	1212133	50
14	Normal/normal	18,5	14,5	1213114	1700	1212614	1700	1212920	200	1213014	1212141	50
16	Normal/normal	18,9	15,4	1213116	1700	1212616	1100	1212927	150	1213016	1212160	50
17	Normal/normal	21,2	17,0	1213117	1300	1212617	1100	1212921	150	1213017	1212176	50
19	Normal/normal	24,3	19,5	1213119	1000	1212619	800	1212928	100	1213019	1212192	50
22	Normal/normal	25,6	21,6	1213122	900	1212622	700	1212929	100	1213022	1212222	50
23	Normal/normal	28,4	23,5	1213123	700	1212623	650	1212930	100	1213023	1212230	50
26	Normal/normal	31,2	26,1	1213126	600	1212626	600	1212931	50	1213026	1212260	50
29	Normal/normal	34,5	29,4	1213129	500	1212629	450	1212932	50	1213029	1212290	25
34	Normal/normal	39,9	34,1	1213134	300	1212634	250	-	-	1213034	1212341	25
37	Normal/normal	42,2	36,7	1213137	300	1212637	250	-	-	1213037	1212370	25
50	Normal/normal	54,0	48,1	1213150	200	1212650	150	-	-	1213050	1212508	25

POLYFLEX®

PA6 HB teške

Standardni profil
Grubi

RoHS

Materijal:
poliamid 6

Radna temperatura:
3000 h: -40°C do 120°C
240 h: -40°C do 150°C

Gorivost:
- UL 94: HB
- prema FMVSS 302: < 100 mm/min.

Boje/izvedbe/pakiranja:
- crna, ostale na upit
- komadno rezane na upit

POLYFLEX®

PA6 HB heavy

Normal Profile
Rough

Svojstva:
- nije potrebno omatanje samoljepljivom trakom na početku ili na kraju kabla
- UV otpornost
- bez halogena

Upotreba:
- za visoka mehanička naprezanja
- motorni prostor i karoserija
- građevinski strojevi i strojevi
- brodogradnja i proizvodnja vlakova
- razvodni ormari

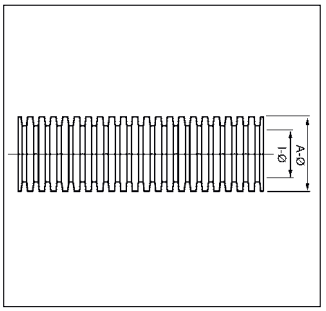

Material:
Polyamide 6

Temperature range:
3000 h: -40°C to 120°C
240 h: -40°C to 150°C

Inflammability:
- UL 94: HB
- acc. to FMVSS 302: < 100 mm/min.

Colour(s)/Designs:
- Black, others on request
- Cutted lengths on request

Characteristics:
- No wrapping tape necessary at cable feeders or cable ends
- UV resistant
- Free of halogen

Applications:
- For high mechanical stresses
- Body section and chassis
- Construction machinery and machinery
- Ship- and trainbuilding
- Switch cabinet

NW NW	Profil profile	A mm A mm	I mm I mm	kolut/Coil Broj artikla nerazrezane crna Art. no. unslit black	JP m PU m
8,5	Standardni /normal	11,7	8,2	1214089	50
10	Standardni /normal	13,0	9,6	1214100	50
12	Standardni /normal	15,7	12,1	1214127	50
14	Standardni /normal	18,5	13,7	1214143	50
17	Standardni /normal	21,2	16,2	1214178	50
23	Standardni /normal	28,3	22,7	1214235	50
23G	Grubi /rough	28,3	21,5	1214236	50
29	Standardni /normal	34,5	28,4	1214291	25
29G	Grubi /rough	34,5	26,9	1214292	25
37	Standardni /normal	42,0	35,5	1214375	25
37G	Grubi /rough	42,5	35,3	1214376	25
50	Standardni /normal	54,0	47,6	1214502	25

POLYFLEX®

PA6 VO

Standardni profil

EN 45545: R22 HL2 - R23 HL3
Eurailtest DOC030603

RoHS | GL | LAPI | UL-Nr.: E81472 | NF F 16-101: I2+F2 Labor Currenta

Materijal:
poliamid 6

Radna temperatura:
3000 h: -40°C do 120°C
240 h: -40°C do 150°C

Gorivost:
- UL 94: VO
- prema FMVSS 302: samogasiva

Boje/izvedbe/pakiranja:
- crna, siva, ostale na upit
- komadno rezane na upit
- kontejner na upit

POLYFLEX®

PA6 VO

Normal Profile

Svojstva:
- nije potrebno omatanje samoljepljivom trakom na početku ili na kraju kabla
- UV otpornost
- bez halogena
- NF F16-101/102: I2+F2

Upotreba:
- za visoka mehanička naprezanja
- motorni prostor i karoserija
- građevinski strojevi i strojevi
- brodogradnja i proizvodnja vlakova
- razvodni ormari
- napomena: za UL odobrenje vidi www.ul.com

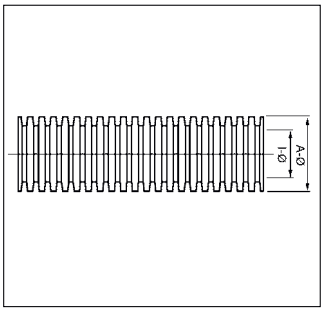

Material:
Polyamide 6

Temperature range:
3000 h: -40°C to 120°C
240 h: -40°C to 150°C

Inflammability:
- UL 94: VO
- acc. to FMVSS 302: selfextinguishing

Colour(s)/Designs:
- Black, grey, others on request
- Cutted lengths on request
- Container on request

Characteristics:
- No wrapping tape necessary at cable feeders or cable ends
- UV resistant
- Free of halogen
- NF F16-101/102: I2+F2

Applications:
- For high mechanical stresses
- Body section and chassis
- Construction machinery and machinery
- Ship- and trainbuilding
- Switch cabinet
- Note: For UL article approval, see www.ul.com

2.1

				kolut/Coil						
NW NW	Profil profile	A mm A mm	I mm I mm	Broj artikla razrezane crna Art. no. slit black	Broj artikla nerazrezane crna Art. no. unslit black	JP m PU m	Broj artikla razrezane siva Art. no. slit grey	JP m PU m	Broj artikla nerazrezane siva Art. no. unslit grey	JP m PU m
3	Standardni /normal	5,2	2,8	1206103	1206003	200	-	-	-	-
7,5	Standardni /normal	10,0	6,7	1206070	1206079	50	-	-	1203070	50
8,5	Standardni /normal	11,7	8,4	-	1206085	50	-	-	1203089	50
10	Standardni /normal	13,0	9,9	1206110	1206109	50	-	-	1203100	50
12	Standardni /normal	15,7	12,2	-	1206125	50	1203612	50	1203126	50
13	Standardni /normal	15,8	12,7	1206113	1206130	50	-	-	1203134	50
14	Standardni /normal	18,5	14,2	-	1206140	50	1203614	50	1203142	50
16	Standardni /normal	18,9	15,0	-	1206160	50	-	-	-	50
17	Standardni /normal	21,2	16,6	1206117	1206176	50	1203617	50	1203177	50
19	Standardni /normal	24,3	19,3	-	1206190	50	-	-	-	50
22	Standardni /normal	25,4	21,3	-	1206220	50	1203623	50	1203223	50
23	Standardni /normal	28,3	23,2	-	1206230	50	-	-	1203231	50
26	Standardni /normal	31,2	25,8	-	1206260	25	-	-	1203266	25
29	Standardni /normal	34,5	29,0	-	1206290	25	-	-	1203290	25
37	Standardni /normal	42,4	36,6	-	1206370	25	-	-	1203371	25
50	Standardni /normal	53,7	47,7	-	1206508	25	-	-	1203509	25

POLYFLEX®

PA6 VO

UFW

POLYFLEX®

PA6 VO

UFW

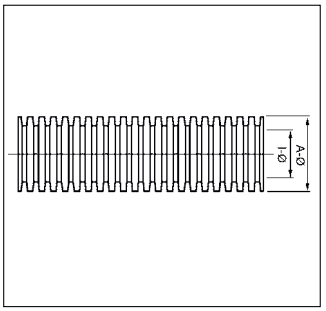

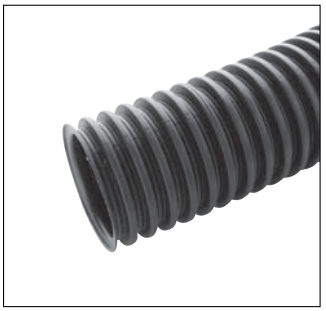

2.1

RoHS | GL | LAPI | UL-Nr.: E81472 | NF F 16-101: I2+F2 Labor Currenta

Materijal:
poliamid 6

Radna temperatura:
3000 h: -40°C do 120°C
240 h: -40°C do 150°C

Gorivost:
- UL 94: VO
- prema FMVSS 302: samogasiva

Boje/izvedbe/pakiranja:
- crna, siva, ostale na upit
- komadno rezane na upit
- kontejner na upit

Svojstva:
- nije potrebno omatanje samoljepljivom trakom na početku ili na kraju kabla
- UV otpornost
- bez halogena
- NF F16-101/102: I1+F2

Upotreba:
- za visoka mehanička naprezanja
- motorni prostor i karoserija
- građevinski strojevi i strojevi
- brodogradnja i proizvodnja vlakova
- razvodni ormari
- napomena: za UL odobrenje vidi www.ul.com

Material:
Polyamide 6

Temperature range:
3000 h: -40°C to 120°C
240 h: -40°C to 150°C

Inflammability:
- UL 94: VO
- acc. to FMVSS 302: selfextinguishing

Colour(s)/Designs:
- Black, grey, others on request
- Cutted lengths on request
- Container on request

Characteristics:
- No wrapping tape necessary at cable feeders or cable ends
- UV resistant
- Free of halogen
- NF F16-101/102: I1+F2

Applications:
- For high mechanical stresses
- Body section and chassis
- Construction machinery and machinery
- Ship- and trainbuilding
- Switch cabinet
- Note: For UL article approval, see www.ul.com

				kolut/Coil					
NW NW	Profil profile	A mm A mm	I mm I mm	Broj artikla razrezane crna Art. no. slit black	Broj artikla nerazrezane crna Art. no. unslit black	JP m PU m	Broj artikla razrezane siva Art. no. slit grey	Broj artikla nerazrezane siva Art. no. unslit grey	JP m PU m
4,5	UFW/ UFW	7,3	4,7	1206540	1206520	100	1203540	1203520	100
7,5	UFW/ UFW	10,1	6,3	1206541	1206521	50	1203541	1203521	50
8,5	UFW/ UFW	12,0	8,2	1206542	1206522	50	1203542	1203522	50
10	UFW/ UFW	13,1	9,3	1206543	1206523	50	1203543	1203523	50
13	UFW/ UFW	15,9	12,0	1206544	1206524	50	1203544	1203524	50
17	UFW/ UFW	21,2	16,0	1206545	1206525	50	1203545	1203525	50
19	UFW/ UFW	23,7	18,6	1206551	1206531	50	1203551	1203531	50
22	UFW/ UFW	25,7	19,9	1206546	1206526	50	1203546	1203526	50
23	UFW/ UFW	28,6	22,2	1206547	1206527	50	1203547	1203527	50
26	UFW/ UFW	31,5	24,9	1206548	1206528	25	1203548	1203528	25
29	UFW/ UFW	34,6	28,4	1206549	1206529	25	1203549	1203529	25
37	UFW/ UFW	42,3	35,4	1206550	1206530	25	1203550	1203530	25

POLYFLEX®

PP-BS

Standardni profil
AHW
High Flex

RoHS

Materijal:
polipropilen sa zaštitom od vatre

Radna temperatura:
3000 h: -40°C do 125°C
500 h: -40°C do 135°C
240 h: -40°C do 150°C

Gorivost:
- UL 94: HB
- prema FMVSS 302: samogasiva

Boje/izvedbe/pakiranja:
- crna, ostale na upit
- komadno rezane na upit

POLYFLEX®

PP-BS

Normal Profile
AHW
High Flex

Svojstva:
- visoka čvrstoća
- otporne na savijanje
- vrlo visoka otpornost na promjene temperature okoline
- UV otpornost

Upotreba:
- industrija vozila
- interijer, karoserija i motor
- AHW-Profil: preporučljiv za male radijuse savijanja

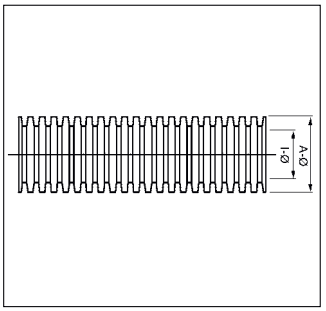

Material:
Polypropylene with fire protection

Temperature range:
3000 h: -40°C to 125°C
500 h: -40°C to 135°C
240 h: -40°C to 150°C

Inflammability:
- UL 94: HB
- acc. to FMVSS 302: selfextinguishing

Colour(s)/Designs:
- Black, others on request
- Cutted lengths on request

Characteristics:
- High strength
- Bending stabile
- Very high cold impact strength
- UV resistant

Applications:
- Vehicle Industries
- Interior, chassis and body section
- AHW-Profile: for small bending radii recommended

2.1

				kontejner/Container				kolut/Coil		
NW	Profil	A mm	I mm	Broj artikla razrezane crna	JP m	Broj artikla nerazrezane crna	JP m	Broj artikla razrezane crna	Broj artikla nerazrezane crna	JP m
NW	profile	A mm	I mm	Art. no. slit black	PU m	Art. no. unslit black	PU m	Art. no. slit black	Art. no. unslit black	PU m
3	Standardni /normal	5,1	2,8	1930403	18000	1930103	18000	1930303	1930003	200
4,5	Standardni /normal	7,1	5,0	1930404	10000	1930104	9000	1930304	1930004	100
6	Standardni /normal	9,2	6,0	1930406	5000	1930106	5000	1930306	1930006	100
7,5	Standardni /normal	9,9	6,9	1930407	5000	1930107	5000	1930307	1930007	50
8,5	Standardni /normal	11,6	8,5	1930408	4000	1930108	3000	1930308	1930008	50
10	Standardni /normal	12,7	10,1	1930410	3300	1930110	3000	1930310	1930010	50
12	Standardni /normal	15,6	12,0	1930412	2200	1930112	2200	1930312	1930012	50
13	Standardni /normal	15,8	12,9	1930413	2200	1930113	2000	1930313	1930013	50
14	Standardni /normal	18,3	14,5	1930414	1700	1930114	1700	1930314	1930014	50
16	Standardni /normal	18,8	15,2	1930416	1700	1930116	1700	1930316	1930016	50
17	Standardni /normal	21,0	16,8	1930417	1300	1930117	1100	1930317	1930017	50
19	Standardni /normal	24,0	19,4	1930419	1000	1930119	800	1930319	1930019	50
22	Standardni /normal	25,5	21,8	1930422	900	1930122	700	1930322	1930022	50
23	Standardni /normal	28,0	23,7	1930423	700	1930123	650	1930323	1930023	50
26	Standardni /normal	31,3	26,4	1930426	600	1930126	600	1930326	1930026	25
29	Standardni /normal	33,9	29,3	1930429	500	1930129	450	1930329	1930029	25
37	Standardni /normal	42,0	36,7	1930437	300	1930137	250	1930337	1930037	25
50	Standardni /normal	53,6	47,8	1930450	200	1930150	150	1930350	1930050	25
4,5	AHW/ AHW	7,1	5,0	1929404	10000	1929104	9000	1929304	1929004	100
6	AHW/ AHW	9,2	6,0	1929406	5000	1929106	5000	1929306	1929006	100
8,5	AHW/ AHW	12,9	8,5	1929408	3300	1929108	3000	1929308	1929008	50
11	AHW/ AHW	15,7	11,1	1929411	2200	1929111	2000	1929311	1929011	50
15	AHW/ AHW	21,2	15,0	1929415	1300	1929115	1100	1929315	1929015	50
19	AHW/ AHW	25,7	19,1	1929419	900	1929119	700	1929319	1929019	50
26	AHW/ AHW	31,4	26,3	1929426	500	1929126	450	1929326	1929026	25
34	AHW/ AHW	39,5	34,1	1929434	300	1929134	250	1929334	1929034	25
13	High Flex/ High Flex	18,4	13,9	1930143	1700	1930133	1700	1930243	1930233	50
19	High Flex/ High Flex	24,0	18,8	1930439	900	1930339	700	1930239	1930139	50
23	High Flex/ High Flex	28,5	23,5	1930163	500	1930153	500	1930263	1930253	50

POLYFLEX®

PP-BS

UFW
JIS

RoHS

2.1

Materijal:
polipropilen sa zaštitom od vatre

Radna temperatura:
3000 h: -40°C do 125°C
500 h: -40°C do 135°C
240 h: -40°C do 150°C

Gorivost:
- UL 94: HB
- prema FMVSS 302: samogasiva

Boje/izvedbe/pakiranja:
- crna, ostale na upit
- komadno rezane na upit

POLYFLEX®

PP-BS

UFW
JIS

Svojstva:
- visoka čvrstoća
- otporne na savijanje
- vrlo visoka otpornost na promjene temperature okoline
- UV otpornost

Upotreba:
- industrija vozila
- interijer, karoserija i motor
- AHW-Profil: preporučljiv za male radijuse savijanja

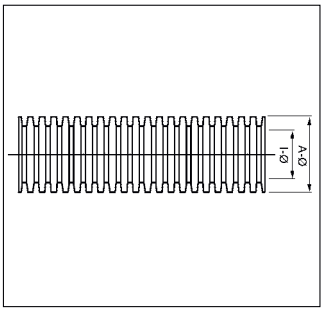

Material:
Polypropylene with fire protection

Temperature range:
3000 h: -40°C to 125°C
500 h: -40°C to 135°C
240 h: -40°C to 150°C

Inflammability:
- UL 94: HB
- acc. to FMVSS 302: selfextinguishing

Colour(s)/Designs:
- Black, others on request
- Cutted lengths on request

Characteristics:
- High strength
- Bending stabile
- Very high cold impact strength
- UV resistant

Applications:
- Vehicle Industries
- Interior, chassis and body section
- AHW-Profile: for small bending radii recommended

				kontejner/Container				kolut/Coil		
NW	Profil	A mm	I mm	Broj artikla razrezane crna	JP m	Broj artikla nerazrezane crna	JP m	Broj artikla razrezane crna	Broj artikla nerazrezane crna	JP m
NW	profile	A mm	I mm	Art. no. slit black	PU m	Art. no. unslit black	PU m	Art. no. slit black	Art. no. unslit black	PU m
4,5	UFW/ UFW	7,2	4,7	1967944	10000	1967904	9000	1967844	1967744	100
7,5	UFW/ UFW	10,0	6,4	1967947	5000	1967907	5000	1967847	1967747	50
8,5	UFW/ UFW	11,9	8,4	1967948	4000	1967908	3300	1967848	1967748	50
10	UFW/ UFW	13,0	9,3	1967950	3300	1967910	3000	1967850	1967750	50
13	UFW/ UFW	15,8	12,4	1967953	2200	1967913	2000	1967853	1967753	50
17	UFW/ UFW	21,1	16,2	1967957	1300	1967917	1100	1967857	1967757	50
19	UFW/ UFW	23,6	18,8	1967959	700	1967919	900	1967859	1967759	50
22	UFW/ UFW	25,5	20,1	1967962	800	1967922	700	1967862	1967762	50
23	UFW/ UFW	28,5	22,6	1967963	700	1967923	650	1967863	1967763	50
26	UFW/ UFW	31,4	25,1	1967966	600	1967926	600	1967866	1967766	25
29	UFW/ UFW	34,5	28,5	1967969	500	1967929	450	1967869	1967769	25
37	UFW/ UFW	42,2	35,5	1967977	300	1967937	250	1967877	1967777	25
5F	JIS/ JIS	7,8	5,4	1997155	5000	1997205	5000	1997105	1997005	100
7F	JIS/ JIS	10,2	7,4	1997157	5000	1997207	4000	1997107	1997007	50
10F	JIS/ JIS	14,1	10,7	1997160	2200	1997210	2200	1997110	1997010	50
13F	JIS/ JIS	17,5	13,2	1997163	1700	1997213	1700	1997113	1997013	50
15F	JIS/ JIS	19,5	15,2	1997165	1500	1997215	1500	1997115	1997015	50
19F	JIS/ JIS	23,8	19,5	1997169	900	1997219	900	1997119	1997019	50
22F	JIS/ JIS	27,0	22,1	1997172	600	1997222	600	1997122	1997022	50
25F	JIS/ JIS	30,0	25,1	1997175	500	1997225	500	1997125	1997025	25
28F	JIS/ JIS	34,0	28,2	1997178	500	1997228	500	1997128	1997028	25

POLYFLEX®

PPmod

Standardni profil
AHW
UFW

RoHS

Materijal:
modificirani polipropilen

Radna temperatura:
3000 h: -40°C do 135°C
500 h: -40°C do 150°C

Gorivost:
- UL 94: V2
- prema FMVSS 302: samogasiva
- brzina izgaranja 0 prema DIN 75200

Boje/izvedbe/pakiranja:
- crna, na upit: plava, narančasta, siva, crvena, žuta
- komadno rezane na upit

POLYFLEX®

PPmod

Normal Profile
AHW
UFW

Svojstva:
- uzdužni razrez ostaje zatvoren nakon montaže
- ušteda na težini korištenjem najmanje NW (nominalne veličine)
- nije potrebno omatanje samoljepljivom trakom na početku ili na kraju kabla
- UV otpornost

Upotreba:
- industrija vozila
- motorni prostor i karoserija
- AHW-Profil: preporučljiv za male radijuse savijanja

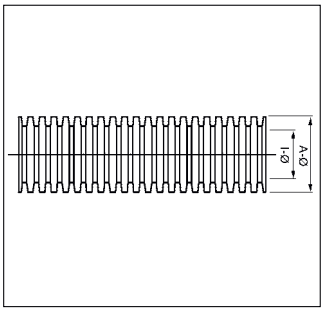

Material:
Polypropylene modified

Temperature range:
3000 h: -40°C to 135°C
500 h: -40°C to 150°C

Inflammability:
- UL 94: V2
- acc. to FMVSS 302: selfextinguishing
- Burningrate 0 acc. to DIN 75200

Colour(s)/Designs:
- Black, on request: blue, orange, grey, red, yellow
- Cutted lengths on request

Characteristics:
- Longitudinal slit stays closed after assembly
- Reduction in weight by using the smallest NW
- No wrapping tape necessary at cable feeders or cable ends
- UV resistant

Applications:
- Vehicle Industries
- Body section and chassis
- AHW-Profile: for small bending radii recommended

2.1

				kontejner/Container				kolut veliki/Coil large		kolut mali/Coil small		
NW	Profil	A mm	l mm	Broj artikla razrezane crna	m	Broj artikla nerazrezane crna	m	Broj artikla nerazrezane crna	m	Broj artikla razrezane crna	Broj artikla nerazrezane crna	m
NW	profile	A mm	l mm	Art. no. slit black	m	Art. no. unslit black	m	Art. no. unslit black	m	Art. no. slit black	Art. no. unslit black	m
3	Normal/normal	5,1	2,8	1950003	18000	1950053	18000	-	-	1926303	1926003	200
4,5	Normal/normal	7,1	5,0	1950004	10000	1950054	9000	1926251	200	1926304	1926004	100
6	Normal/normal	9,2	6,0	1950006	5000	1950055	5000	1926159	200	1926306	1926006	100
7,5	Normal/normal	9,9	6,9	1950007	5000	1950056	5000	1926157	250	1926307	1926007	50
8,5	Normal/normal	11,6	8,5	1950008	4000	1950057	3000	1926166	250	1926308	1926008	50
10	Normal/normal	12,7	10,1	1950010	3300	1950058	3000	1926098	200	1926310	1926100	50
12	Normal/normal	15,6	12,0	1950012	2200	1950059	2000	1926167	200	1926312	1926120	50
13	Normal/normal	15,8	12,9	1950013	2200	1950060	2000	1926133	200	1926313	1926130	50
14	Normal/normal	18,3	14,5	1950014	1700	1950061	1700	1926168	200	1926314	1926140	50
16	Normal/normal	18,8	15,2	1950016	1500	1950062	1500	1926169	150	1926316	1926160	50
17	Normal/normal	21,0	16,8	1950017	1300	1950063	1100	1926174	150	1926317	1926170	50
19	Normal/normal	24,0	19,4	1950019	1000	1950064	1000	1926177	100	1926319	1926190	50
22	Normal/normal	25,5	21,8	1950022	800	1950065	700	1926225	100	1926322	1926220	50
23	Normal/normal	28,0	23,7	1950023	700	1950066	700	1926178	100	1926323	1926223	50
26	Normal/normal	31,3	26,4	1950026	600	1950067	600	1926179	50	1926326	1926226	25
29	Normal/normal	33,9	29,3	1950029	500	1950068	500	1926180	50	1926329	1926229	25
37	Normal/normal	42,0	36,7	1950037	300	1950069	300	1926181	30	1926337	1926237	25
50	Normal/normal	53,6	47,8	1950050	200	1950070	200	1926182	30	1926350	1926250	25
4,5	AHW/AHW	7,1	5,0	1950104	10000	1950704	9000			1927304	1927004	100
6	AHW/AHW	9,2	6,0	1950106	5000	1950706	5000			1927306	1927006	100
8,5	AHW/AHW	12,9	8,5	1950108	3300	1950708	3000			1927308	1927008	50
11	AHW/AHW	15,7	11,1	1950111	2200	1950711	2000			1927311	1927110	50
15	AHW/AHW	21,2	15,0	1950115	1300	1950715	1100			1927315	1927115	50
19	AHW/AHW	25,7	19,1	1950119	900	1950719	700			1927319	1927119	50
26	AHW/AHW	31,4	26,3	1950126	500	1950726	450			1927326	1927126	25
34	AHW/AHW	39,5	34,1	1950134	300	1950734	250			1927334	1927134	25
4,5	UFW/UFW	7,2	4,7	1949344	10000	1949404	9000	1949004	200	1949304	1949204	100
7,5	UFW/UFW	10,0	6,4	1949347	5000	1949407	5000	1949007	250	1949307	1949207	50
8,5	UFW/UFW	11,9	8,4	1949348	4000	1949408	3300	1949008	250	1949308	1949208	50
10	UFW/UFW	13,0	9,3	1949350	3300	1949410	3000	1949010	200	1949310	1949210	50
13	UFW/UFW	15,8	12,4	1949353	2200	1949413	2000	1949013	200	1949313	1949213	50
17	UFW/UFW	21,1	16,2	1949357	1300	1949417	1100	1949017	150	1949317	1949217	50
19	UFW/UFW	23,6	18,8	1949359	900	1949419	700	1949019	100	1949319	1949219	50
22	UFW/UFW	25,5	20,1	1949362	800	1949422	700	1949022	100	1949322	1949222	50
23	UFW/UFW	28,5	22,6	1949363	700	1949423	650	1949023	100	1949323	1949223	50
26	UFW/UFW	31,4	25,1	1949366	600	1949426	600	1949026	50	1949326	1949226	25
29	UFW/UFW	34,5	28,5	1949369	500	1949429	450	1949029	50	1949329	1949229	25
37	UFW/UFW	42,2	35,5	1949377	300	1949437	250	1949038	30	1949337	1949237	25

POLYFLEX®

PAER

Standardni profil
AHW
High Flex
UFW

RoHS

2.1

Materijal:
modificirani poliamid 6

Radna temperatura:
3000 h: -40°C do 150°C
240 h: -40°C do 175°C

Gorivost:
- UL 94: HB
- prema FMVSS 302: samogasiva

Boje/izvedbe/pakiranja:
- crna, ostale na upit
- komadno rezane na upit

POLYFLEX®

PAER

Normal Profile
AHW
High Flex
UFW

Svojstva:
- UV otpornost
- bez halogena

Upotreba:
- industrija vozila
- motorni prostor i karoserija
- AHW-Profil: preporučljiv za male radijuse savijanja

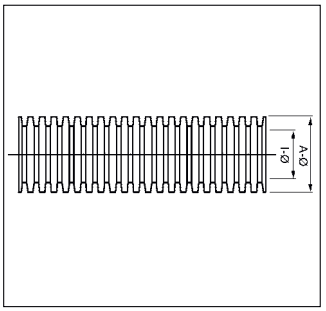

Material:
Polyamide 6 modified

Temperature range:
3000 h: -40°C to 150°C
240 h: -40°C to 175°C

Inflammability:
- UL 94: HB
- acc. to FMVSS 302: selfextinguishing

Colour(s)/Designs:
- Black, others on request
- Cutted lengths on request

Characteristics:
- UV resistant
- Free of halogen

Applications:
- Vehicle Industries
- Body section and chassis
- AHW-Profile: for small bending radii recommended

				kontejner/Container				kolut/Coil		
NW	Profil	A mm	l mm	Broj artikla razrezane crna	JP m	Broj artikla nerazrezane crna	JP m	Broj artikla razrezane crna	Broj artikla nerazrezane crna	JP m
NW	profile	A mm	l mm	Art. no. slit black	PU m	Art. no. unslit black	PU m	Art. no. slit black	Art. no. unslit black	PU m
4,5	Standardni /normal	7,1	5,0	1215904	10000	1215764	9000	1215804	1215704	100
6	Standardni /normal	9,2	6,0	1215906	5000	1215766	5000	1215806	1215706	100
7,5	Standardni /normal	10,0	6,7	1215907	5000	1215767	5000	1215807	1215707	50
8,5	Standardni /normal	11,7	8,4	1215908	4000	1215768	3300	1215808	1215708	50
10	Standardni /normal	13,0	9,9	1215910	3300	1215770	3000	1215810	1215710	50
12	Standardni /normal	15,7	12,2	1215912	2200	1215772	2200	1215812	1215712	50
13	Standardni /normal	15,8	12,7	1215913	2200	1215773	2000	1215813	1215713	50
14	Standardni /normal	18,5	14,2	1215914	1700	1215774	1700	1215814	1215714	50
16	Standardni /normal	18,9	15,0	1215916	1700	1215776	1700	1215816	1215716	50
17	Standardni /normal	21,2	16,6	1215917	1300	1215777	1100	1215817	1215717	50
22	Standardni /normal	25,4	21,3	1215922	900	1215782	700	1215822	1215722	50
23	Standardni /normal	28,3	23,2	1215923	700	1215783	650	1215823	1215723	50
26	Standardni /normal	31,2	25,8	1215926	500	1215786	600	1215826	1215726	25
29	Standardni /normal	34,5	29,0	1215929	500	1215789	450	1215829	1215729	25
37	Standardni /normal	42,4	36,0	1215937	300	1215790	250	1215837	1215737	25
50	Standardni /normal	54,0	47,7	1215950	200	1215791	150	1215850	1215750	25
4,5	AHW /AHW	7,1	5,0	1215964	10000	1215554	9000	1215043	1215504	100
6	AHW /AHW	9,2	6,0	1215966	5000	1215556	5000	1215060	1215506	100
8,5	AHW /AHW	12,9	8,5	1215968	3300	1215558	3000	1215086	1215508	50
11	AHW /AHW	15,7	11,1	1215971	2200	1215561	2000	1215116	1215511	50
15	AHW /AHW	21,2	15,0	1215975	1300	1215565	1100	1215159	1215515	50
19	AHW /AHW	25,7	19,1	1215979	900	1215569	700	1215191	1215519	50
26	AHW /AHW	31,4	26,3	1215986	500	1215576	450	1215264	1215526	25
34	AHW /AHW	39,5	34,1	1215994	300	1215586	250	1215345	1215534	25
13	High Flex /High Flex	18,6	13,9	1215313	1700	1215213	1700	1215113	1215013	50
19	High Flex /High Flex	24,2	19,0	1215319	900	1215219	700	1215119	1215019	50
23	High Flex /High Flex	28,7	23,6	1215323	600	1215223	500	1215123	1215023	50
4,5	UFW /UFW	7,3	4,7	1215164	9000	1215124	9000	1215444	1215404	100
7,5	UFW /UFW	10,1	6,3	1215167	5000	1215127	5000	1215447	1215407	50
8,5	UFW /UFW	12,0	8,2	1215168	3300	1215128	3300	1215448	1215408	50
10	UFW /UFW	13,1	9,3	1215170	3000	1215130	3000	1215450	1215410	50
13	UFW /UFW	15,9	12,0	1215173	2000	1215133	2000	1215453	1215413	50
17	UFW /UFW	21,2	16,0	1215177	1100	1215137	1100	1215457	1215417	50
19	UFW /UFW	23,7	18,6	1215179	900	1215139	700	1215459	1215419	50
22	UFW /UFW	25,7	19,9	1215182	700	1215142	700	1215462	1215422	50
23	UFW /UFW	28,6	22,2	1215183	650	1215143	650	1215463	1215423	50
26	UFW /UFW	31,5	24,9	1215186	600	1215146	600	1215466	1215426	25
29	UFW /UFW	34,6	28,4	1215189	500	1215149	450	1215469	1215429	25
37	UFW /UFW	42,3	35,4	1215197	250	1215157	250	1215477	1215437	25

POLYFLEX®

TPE (Hytrel)

Standardni profil

POLYFLEX®

TPE (Hytrel)

Normal Profile

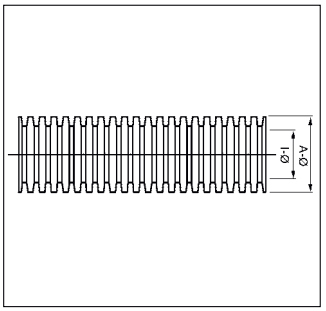

RoHS

Materijal:
termoplastični elastomer

Radna temperatura:
3000 h: -40°C do 150°C
500 h: -40°C do 175°C

Gorivost:
- prema FMVSS 302: < 100 mm/min. ili samogasiva

Boje/izvedbe/pakiranja:
- crna, ostale na upit
- komadno rezane na upit

Svojstva:
- otpornost na tekućine

Upotreba:
- industrija vozila
- motorni prostor i karoserija

Material:
Thermoplastic Elastomere

Temperature range:
3000 h: -40°C to 150°C
500 h: -40°C to 175°C

Inflammability:
- acc. to FMVSS 302: < 100 mm/min. or selfextinguishing

Colour(s)/Designs:
- Black, others on request
- Cutted lengths on request

Characteristics:
- Hydro resistant

Applications:
- Vehicle Industries
- Body section and chassis

					kontejner/Container				kolut/Coil		
NW NW	Profil profile	Gorivost FMVSS 302 Inflammability FMVSS 302	A mm A mm	I mm I mm	Broj artikla razrezane crna Art. no. slit black	JP m PU m	Broj artikla nerazrezane crna Art. no. unslit black	JP m PU m	Broj artikla razrezane crna Art. no. slit black	Broj artikla nerazrezane crna Art. no. unslit black	JP m PU m
4,5	Standardni /normal	samogas. /selfexting.	7,1	4,8	1270804	9000	1270604	9000	1270704	1270504	100
6	Standardni /normal	samogas. /selfexting.	9,3	6,1	1270806	5000	1270606	5000	1270706	1270506	100
7,5	Standardni /normal	samogas. /selfexting.	10,0	6,7	1270807	5000	1270607	5000	1270707	1270507	50
8,5	Standardni /normal	samogas. /selfexting.	11,5	8,5	1270808	3300	1270608	3300	1270708	1270508	50
10	Standardni /normal	samogas. /selfexting.	13,0	9,8	1270810	3000	1270610	3000	1270710	1270510	50
13	Standardni /normal	samogas. /selfexting.	15,8	12,6	1270813	2200	1270613	2200	1270713	1270513	50
14	Standardni /normal	samogas. /selfexting.	18,3	14,2	1270814	1700	1270614	1700	1270714	1270514	50
17	Standardni /normal	samogas. /selfexting.	21,2	16,8	1270817	1100	1270617	1100	1270717	1270517	50
19	Standardni /normal	samogas. /selfexting.	24,0	19,2	1270819	800	1270619	800	1270719	1270519	50
22	Standardni /normal	samogas. /selfexting.	25,3	21,0	1270822	700	1270622	700	1270722	1270522	50
23	Standardni /normal	samogas. /selfexting.	28,1	23,4	1270823	650	1270623	650	1270723	1270523	50
26	Standardni /normal	samogas. /selfexting.	30,8	25,8	1270826	600	1270626	600	1270726	1270526	25
29	Standardni /normal	samogas. /selfexting.	34,1	29,1	1270829	450	1270629	450	1270729	1270529	25
37	Standardni /normal	samogas. /selfexting.	41,5	36,1	1270837	250	1270637	250	1270737	1270537	25
4,5	Standardni /normal	< 100 mm/min.	7,1	4,8	1275404	9000	1275104	9000	1275304	1275004	100
6	Standardni /normal	< 100 mm/min.	9,3	6,1	1275406	5000	1275106	5000	1275306	1275006	100
7,5	Standardni /normal	< 100 mm/min.	10,0	6,7	1275407	5000	1275107	5000	1275307	1275007	50
8,5	Standardni /normal	< 100 mm/min.	11,5	8,6	1275408	3300	1275108	3300	1275308	1275008	50
10	Standardni /normal	< 100 mm/min.	12,6	9,7	1275410	3000	1275110	3000	1275310	1275010	50
13	Standardni /normal	< 100 mm/min.	15,8	12,6	-	-	-	-	-	1275013	50
14	Standardni /normal	< 100 mm/min.	18,2	14,3	1275414	1700	1275114	1700	1275314	1275014	50
17	Standardni /normal	< 100 mm/min.	21,2	16,8	1275417	1100	1275117	1100	1275317	1275017	50
19	Standardni /normal	< 100 mm/min.	24,0	19,2	1275419	800	1275119	800	1275319	1275019	50
22	Standardni /normal	< 100 mm/min.	25,3	21,0	1275422	700	1275122	700	1275322	1275022	50
23	Standardni /normal	< 100 mm/min.	28,1	23,4	1275423	650	1275123	650	1275323	1275023	50
26	Standardni /normal	< 100 mm/min.	30,8	25,8	1275426	600	1275126	600	1275326	1275026	25
29	Standardni /normal	< 100 mm/min.	34,1	29,1	1275429	450	1275129	450	1275329	1275029	25
37	Standardni /normal	< 100 mm/min.	41,5	36,1	1275437	250	1275137	250	1275337	1275037	25

POLYFLEX®

TPC Permaflex

Standardni profil

POLYFLEX®

TPC Permaflex

Normal Profile

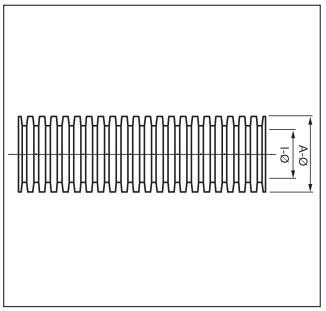

2.1

RoHS

Materijal:
termoplastični elastomer

Radna temperatura:
3000 h: -40°C do 150°C
500 h: -40°C do 175°C

Gorivost:
• premaFMVSS 302: < 100 mm/min.

Boje/izvedbe/pakiranja:
• crna, ostale na upit
• komadno rezane na upit

Svojstva:
• industrija vozila
• motorni prostor i karoserija

Material:
Thermoplastic Elastomere

Temperature range:
3000 h: -40°C to 150°C
500 h: -40°C to 175°C

Inflammability:
• acc. to FMVSS 302: < 100 mm/min.

Colour(s)/Designs:
• Black, others on request
• Cutted lengths on request

Applications:
• Vehicle Industries
• Body section and chassis

					kontejner / Container				kolut/Coil		
NW NW	Profil profile	Gorivost FMVSS 302 Inflammability FMVSS 302	A mm A mm	l mm l mm	Broj artikla razrezane crna Art. no. slit black	m m	Broj artikla nerazrezane crna Art. no. unslit black	m m	Broj artikla razrezane crna Art. no. slit black	Broj artikla nerazrezane crna Art. no. unslit black	m m
4,5	standardni/normal	samogas./ selfexting.	7,1	4,8	1223204	9000	1223304	9000	1223004	1223104	100
6	standardni/normal	samogas./ selfexting.	9,3	6,0	1223206	5000	1223306	5000	1223006	1223106	100
7,5	standardni/normal	samogas./ selfexting.	10,0	6,8	1223207	5000	1223307	5000	1223007	1223107	50
8,5	standardni/normal	samogas./ selfexting.	11,6	8,6	1223208	3300	1223308	3300	1223008	1223108	50
10	standardni/normal	samogas./ selfexting.	13,2	9,8	1223210	3000	1223310	3000	1223010	1223110	50
12	posebni profil/Spec. profile	samogas./ selfexting.	15,9	11,7	1223212	2200	1223312	2200	1223012	1223112	50
13	standardni/normal	samogas./ selfexting.	16,0	12,9	1223213	2200	1223313	2000	1223013	1223113	50
13	High Flex/High-Flex	samogas./ selfexting.	18,5	13,8	1223215	1700	1223315	1700	1223015	1223115	50
14	posebni profil/Spec. profile	samogas./ selfexting.	19,2	15,2	1223214	1700	1223314	1700	1223014	1223114	50
17	standardni/normal	samogas./ selfexting.	21,4	16,9	1223217	1100	1223317	1100	1223017	1223117	50
19	standardni/normal	samogas./ selfexting.	24,2	19,4	1223219	900	1223319	700	1223019	1223119	50
22	standardni/normal	samogas./ selfexting.	25,4	21,2	1223222	700	1223322	700	1223022	1223122	25
23	High Flex/High-Flex	samogas./ selfexting.	28,4	23,2	1223223	600	1223323	500	1223023	1223123	25
26	standardni/normal	samogas./ selfexting.	31,0	26,0	1223226	600	1223326	600	1223026	1223126	25
29	standardni/normal	samogas./ selfexting.	34,3	29,2	1223229	450	1223329	450	1223029	1223129	25

Posebni i High Flex profili samo za neke nazivne širine.
Special and high-flex profiles only for certain nominal widths.

POLYFLEX®

TPC-EE (Arnitel)

Standardni profil
AHW
UFW

2.1

RoHS

Materijal:
termoelastični elastomer
sa ili bez usporivača plamena

Radna temperatura:
3000 h: -40°C do 175°C
187 h: -40°C do 190°C

Gorivost:
- prema FMVSS 302: < 100 mm/min. ili samogasiva
- brzina izgaranja 0 prema DIN 75200

Boje/izvedbe/pakiranja:
- crna, ostale na upit
- komadno rezane na upit

Svojstva:
- otpornost na visoke temperature
- visoka savitljivost
- visoka elastičnost
- otpornost na habanje
- visoka vlačna čvrstoća
- otporne na savijanje
- otpornost na udarce
- dobra kemijska otpornost
- bez halogena
- otpornost na tekućine
- UV otpornost
- nije potrebno omatanje samoljepljivom trakom na početku ili na kraju kabla

Svojstva UFW:
- velika unutarnja dodirna površina

Upotreba:
- industrija vozila
- motorni prostor i karoserija
- AHW-Profil: preporučljiv za male radijuse savijanja

POLYFLEX®

TPC-EE (Arnitel)

Normal Profile
AHW
UFW

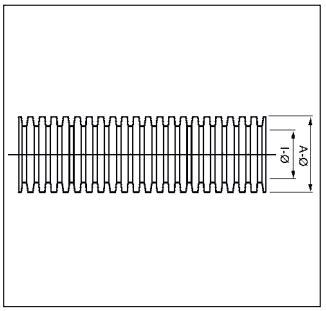

Material:
Thermoplastic Elastomere
with or without flame retardant

Temperature range:
3000 h: -40°C to 175°C
187 h: -40°C to 190°C

Inflammability:
- acc. to FMVSS 302: < 100 mm/min. or selfextinguishing
- Burningrate 0 acc. to DIN 75200

Colour(s)/Designs:
- Black, others on request
- Cutted lengths on request

Characteristics:
- High temperatur resistance
- Highly flexible
- High restoring capacity
- Wear resistant
- Tensile strength
- Bending stabile
- Impact strength
- Good chemical resistance
- Free of halogen
- Hydro resistant
- UV resistant
- No wrapping tape necessary at cable feeders or cable ends

Characteristics UFW:
- Big inner contact surface

Applications:
- Vehicle Industries
- Body section and chassis
- AHW-Profile: for small bending radii recommended

					kontejner/Container				kolut/Coil		
NW NW	Profil profile	Gorivost prema FMVSS 302 Inflammability to FMVSS 302	A mm A mm	I mm I mm	Broj artikla razrezane crna Art. no. slit black	JP m PU m	Broj artikla nerazrezane crna Art. no. unslit black	JP m PU m	Broj artikla razrezane crna Art. no. slit black	Broj artikla nerazrezane crna Art. no. unslit black	JP m PU m
3	Stand. /normal	< 100 mm/min	na upit /o.r.	na upit /o.r.	na upit /o.r.	n.u./o.r.	na upit /o.r.	n.u./o.r.	na upit /o.r.	na upit /o.r.	n.u./o.r.
4,5	Stand. /normal	< 100 mm/min	7,1	4,7	1211440	9000	1211400	9000	1211830	1211804	100
6	Stand. /normal	< 100 mm/min	9,2	6,0	1211441	5000	1211401	5000	1211834	1211806	100
7,5	Stand. /normal	< 100 mm/min	10,0	6,6	1211442	5000	1211402	5000	1211831	1211807	50
7,5	Stand. /normal	samogasive /selfexting.	10,0	6,6	1211369	5000	1211152	5000	1211307	1211107	50
8,5	Stand. /normal	< 100 mm/min	11,5	8,4	1211443	3300	1211403	3300	1211832	1211808	50
10	Stand. /normal	< 100 mm/min	12,9	9,7	1211445	3000	1211405	3000	1211833	1211810	50
13	Stand. /normal	< 100 mm/min	15,8	12,6	1211447	2200	1211407	2200	-	1211811	50
14	Stand. /normal	< 100 mm/min	18,4	14,2	1211448	1700	1211408	1700	1211837	1211815	50
17	Stand. /normal	< 100 mm/min	21,2	16,6	1211449	1100	1211409	1100	1211839	1211817	50
19	Stand. /normal	< 100 mm/min	24,0	19,2	1211450	800	1211410	800	1211840	1211819	50
22	Stand. /normal	< 100 mm/min	25,3	21,0	1211451	700	1211411	700	1211841	1211822	50
23	Stand. /normal	< 100 mm/min	28,1	23,4	1211452	650	1211412	650	1211842	1211823	50
26	Stand. /normal	< 100 mm/min	30,8	25,9	1211453	600	1211413	600	1211843	1211826	25
29	Stand. /normal	< 100 mm/min	34,1	29,1	1211454	450	1211414	450	1211844	1211829	25
37	Stand. /normal	< 100 mm/min	41,5	36,3	1211455	250	1211415	250	1211845	1211828	25
4,5	AHW /AHW	samogasive /selfexting.	7,0	4,9	1211350	9000	1211150	9000	1211304	1211104	100
6	AHW /AHW	samogasive /selfexting.	9,2	6,0	1211351	5000	1211151	5000	1211306	1211106	100
8,5	AHW /AHW	samogasive /selfexting.	12,9	8,5	1211353	3000	1211153	3000	1211308	1211108	50
11	AHW /AHW	samogasive /selfexting.	15,7	11,1	1211355	2000	1211155	2000	1211311	1211111	50
15	AHW /AHW	samogasive /selfexting.	21,0	15,0	1211359	1100	1211159	1100	1211315	1211115	50
19	AHW /AHW	samogasive /selfexting.	25,7	19,1	1211362	700	1211162	700	1211319	1211119	50
26	AHW /AHW	samogasive /selfexting.	31,2	26,1	1211365	450	1211165	450	1211326	1211126	25
34	AHW /AHW	samogasive /selfexting.	39,2	34,0	1211367	250	1211167	250	1211334	1211134	25
4,5	UFW /UFW	samogasive /selfexting.	7,3	4,5	1210304	9000	1210204	9000	1210104	1210004	100
7,5	UFW /UFW	samogasive /selfexting.	10,0	6,1	1210307	5000	1210207	5000	1210107	1210007	50
8,5	UFW /UFW	samogasive /selfexting.	12,0	8,2	1210308	3300	1210208	3300	1210108	1210008	50
10	UFW /UFW	samogasive /selfexting.	13,0	9,1	1210310	3000	1210210	3000	1210110	1210010	50
13	UFW /UFW	samogasive /selfexting.	15,8	12,4	1210313	2000	1210213	2000	1210113	1210013	50
17	UFW /UFW	samogasive /selfexting.	21,1	16,2	1210317	1100	1210217	1100	1210117	1210017	50
19	UFW /UFW	samogasive /selfexting.	23,6	18,8	1210319	900	1210219	700	1210119	1210019	50
22	UFW /UFW	samogasive /selfexting.	25,5	20,0	1210322	700	1210222	700	1210122	1210022	50
23	UFW /UFW	samogasive /selfexting.	28,5	22,5	1210323	650	1210223	650	1210123	1210023	50
26	UFW /UFW	samogasive /selfexting.	31,4	25,1	1210326	600	1210226	600	1210126	1210026	25
29	UFW /UFW	samogasive /selfexting.	34,4	28,4	1210329	500	1210229	450	1210129	1210029	25
37	UFW /UFW	samogasive /selfexting.	42,0	35,4	1210337	250	1210237	250	1210137	1210037	25

POLYFLEX®

TPC-ES (Arnitel C)

Standardni profil
UFW

RoHS

2.1

Materijal:
termoelastični elastomer
bez usporivača plamena

Radna temperatura:
3000 h: -40°C do 175°C
240 h: -40°C do 200°C

Gorivost:
- prema FMVSS 302: < 100 mm/min.
- brzina izgaranja 0 prema DIN 75200

Boje/izvedbe/pakiranja:
- crna, ostale na upit
- komadno rezane na upit

Svojstva:
- otpornost na visoke temperature
- visoka savitljivost
- visoka elastičnost
- otpornost na habanje

POLYFLEX®

TPC-ES (Arnitel C)

Normal Profile
UFW

- visoka vlačna čvrstoća
- otporne na savijanje
- otpornost na udarce
- dobra kemijska otpornost
- bez halogena
- otpornost na tekućine
- UV otpornost
- nije potrebno omatanje samoljepljivom trakom na početku ili na kraju kabla

Upotreba:
- industrija vozila
- motorni prostor i karoserija

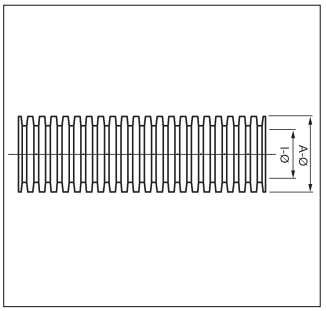

Material:
Thermoplastic Elastomere
without flame retardant

Temperature range:
3000 h: -40°C to 175°C
240 h: -40°C to 200°C

Inflammability:
- acc. to FMVSS 302: < 100 mm/min.
- Burningrate 0 acc. to DIN 75200

Colour(s)/Designs:
- Black, others on request
- Cutted lengths on request

Characteristics:
- High temperatur resistance
- Highly flexible
- High restoring capacity
- Wear resistant

- Tensile strength
- Bending stabile
- Impact strength
- Good chemical resistance
- Free of halogen
- Hydro resistant
- UV resistant
- No wrapping tape necessary at cable feeders or cable ends

Applications:
- Vehicle Industries
- Body section and chassis

					kontejner / Container				kolut/Coil		
NW	Profil	Gorivost prema FMVSS 302	A mm	l mm	Broj artikla razrezane crna	m	Broj artikla nerazrezane crna	m	Broj artikla razrezane crna	Broj artikla nerazrezane crna	m
NW	profile	Inflammability to FMVSS 302	A mm	l mm	Art. no. slit black	m	Art. no. unslit black	m	Art. no. slit black	Art. no. unslit black	m
4,5	Stand./normal	< 100 mm/min	7,2	4,8	1232204	9000	1232304	9000	1232004	1232104	100
6	Stand./normal	< 100 mm/min	9,2	6,0	1232206	5000	1232306	5000	1232006	1232106	100
7,5	Stand./normal	< 100 mm/min	10,0	6,7	1232207	5000	1232307	5000	1232007	1232107	50
10	Stand./normal	< 100 mm/min	13,1	9,7	1232210	3000	1232310	3000	1232010	1232110	50
13	Stand./normal	< 100 mm/min	15,8	12,7	1232213	2200	1232313	2200	1232013	1232113	50
14 SP	Stand./normal	< 100 mm/min	19,2	15,2	1232214	1700	1232314	1700	1232014	1232114	50
17	Stand./normal	< 100 mm/min	21,2	16,8	1232217	1100	1232317	1100	1232017	1232117	50
19	Stand./normal	< 100 mm/min	24,0	19,2	1232219	900	1232319	900	1232019	1232119	50

POLYFLEX®

ETFE TOP 200

Standardni profil

POLYFLEX®

ETFE TOP 200

Normal profile

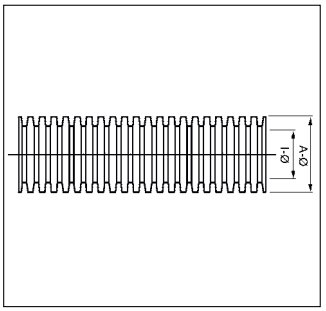

RoHS

Materijal:
Etilen/tetrafluoretilenpolimer

Radna temperatura:
3000 h: -40°C do 200°C

Gorivost:
- UL 94: VO
- prema FMVSS 302: samogasiva

Boje/izvedbe/pakiranja:
- crna, ostale na upit
- komadno rezane na upit

Svojstva:
- otpornost na visoke temperature
- visoka kemijska otpornost
- visoka čvrstoća
- dobra mehanička otpornost

Upotreba:
- industrija vozila
- motorni prostor i instalacije u neposrednoj blizini motora
- za visoke temperaturne zahtjeve

Material:
Ethylene/Tetraflourethylenecopolymere

Temperature range:
3000 h: -40°C to 200°C

Inflammability:
- UL 94: VO
- acc. to FMVSS 302: selfextinguishing

Colour(s)/Designs:
- Black, others on request
- Cutted lengths on request

Characteristics:
- High temperature resistance
- High chemical resistance
- High strength
- High mechanical resistance

Applications:
- Vehicle Industries
- Body section and near the engine
- For high temperature demands

2.1

				kolut/Coil		
NW NW	Profil profile	A mm A mm	l mm l mm	Broj artikla razrezane crna Art. no. slit black	Broj artikla nerazrezane crna Art. no. unslit black	JP m PU m
4,5	Standardni /normal	7,1	5,0	1293104	1293004	100
6S	Standardni /normal	9,3	6,3	1293106	1293006	100
7,5	Standardni /normal	9,8	6,8	1293107	1293007	50
10	Standardni /normal	13,3	10,1	1293110	1293010	50
13	Standardni /normal	16,0	13,2	1293113	1293013	50
13C	Standardni /normal	16,0	12,5	1290113	1290013	50
14	Standardni /normal	18,8	14,6	1293114	1293014	50
16	Standardni /normal	19,2	15,4	1293116	1293016	50
17	Standardni /normal	21,7	17,2	1293117	1293017	50
19	Standardni /normal	23,9	19,1	-	1293019	50
22	Standardni /normal	25,8	21,8	1293122	1293022	50

POLYFLEX®

PFA TOP 240/250/260

Standardni profil

POLYFLEX®

PFA TOP 240/250/260

Normal Profile

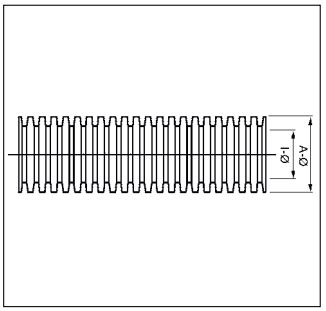

2.1

RoHS

Materijal:
Perfluoralkoxy kopolimer

Radna temperatura:
TOP 240: 3000 h: -40°C do 240°C
TOP 240: 500 h: -40°C do 260°C

TOP 250: 3000 h: -40°C do 250°C
TOP 250: 500 h: -40°C do 270°C

TOP 260: 3000 h: -40°C do 260°C
TOP 260: 500 h: -40°C do 280°C

Gorivost:
- UL 94: VO
- prema FMVSS 302: samogasiva

Boje/izvedbe/pakiranja:
- crna, ostale na upit
- komadno rezane i kontejner na upit

Svojstva:
- otpornost na visoke temperature
- visoka otpornost na udarce
- visoka otpornost na savijanje
- visoka kemijska otpornost

Upotreba:
- automobili i kamioni
- motorni prostor i instalacije u neposrednoj blizini motora
- za ekstremno visoke temperaturne zahtjeve

Material:
Perfluoralkoxy Copolymere

Temperature range:
TOP 240: 3000 h: -40°C to 240°C
TOP 240: 500 h: -40°C to 260°C

TOP 250: 3000 h: -40°C to 250°C
TOP 250: 500 h: -40°C to 270°C

TOP 260: 3000 h: -40°C to 260°C
TOP 260: 500 h: -40°C to 280°C

Inflammability:
- UL 94: VO
- acc. to FMVSS 302: selfextinguishing

Colour(s)/Designs:
- Black, others on request
- Cutted lengths and Containers on request

Characteristics:
- High temperature resistance
- High impact strength
- High bending strength
- High chemical resistance

Applications:
- Cars and heavy trucks
- Body section and near the engine
- For extremely high temperature demands

					kolut/Coil		
Typ **Type**	**NW** **NW**	**Profil** **profile**	**A mm** **A mm**	**l mm** **l mm**	**Broj artikla razrezane crna** **Art. no. slit black**	**Broj artikla nerazrezane crna** **Art. no. unslit black**	**JP m** **PU m**
TOP 240	4,5	Standardni /normal	7,0	4,5	1291404	1291304	100
TOP 240	6	Standardni /normal	9,3	6,2	1291406	1291306	100
TOP 240	7,5	Standardni /normal	10,0	6,9	1291407	1291307	50
TOP 240	10	Standardni /normal	13,2	10,0	1291410	1291310	50
TOP 240	13C	Standardni /normal	16,0	12,5	1291413	1291313	50
TOP 240	13C	Standardni /normal	16,0	12,5	-	1291613	200
TOP 240	14C	Standardni /normal	17,8	13,9	1291414	1291314	50
TOP 240	14C	Standardni /normal	17,8	13,9	-	1291614	150
TOP 240	17C	Standardni /normal	21,1	16,8	1291417	1291317	50
TOP 240	17C	Standardni /normal	21,1	16,8	-	1291617	150
TOP 240	19C	Standardni /normal	23,3	18,8	1291419	1291319	50
TOP 240	22C	Standardni /normal	25,0	20,3	1291422	1291322	50
TOP 240	23C	Standardni /normal	28,8	23,8	1291423	1291323	50
TOP 250	4,5	Standardni /normal	7,0	4,5	1296104	1296004	100
TOP 250	6	Standardni /normal	9,3	6,2	1296106	1296006	100
TOP 250	7,5	Standardni /normal	10,0	6,9	1296107	1296007	50
TOP 250	10	Standardni /normal	13,2	10,0	1296110	1296010	50
TOP 250	13	Standardni /normal	16,0	13,0	1296113	1296013	50
TOP 250	14	Standardni /normal	18,5	14,5	1296114	1296014	50
TOP 250	16	Standardni /normal	18,9	15,4	1296116	1296016	50
TOP 250	17	Standardni /normal	21,4	17,0	1296117	1296017	50
TOP 250	22	Standardni /normal	25,5	21,8	1296122	1296022	50
TOP 260	4,5	Standardni /normal	7,0	4,5	1291004	1291104	100
TOP 260	6	Standardni /normal	9,3	6,2	1291006	1291106	100
TOP 260	7,5	Standardni /normal	10,0	6,9	1291007	1291107	50
TOP 260	10	Standardni /normal	13,2	10,0	1291010	1291110	50
TOP 260	13C	Standardni /normal	16,0	12,5	1291013	1291113	50
TOP 260	13C	Standardni /normal	16,0	12,5	-	1291513	200
TOP 260	14C	Standardni /normal	17,8	13,8	1291014	1291114	50
TOP 260	17C	Standardni /normal	21,1	16,6	1291017	1291117	50
TOP 260	19C	Standardni /normal	23,3	18,6	1291019	1291119	50
TOP 260	22C	Standardni /normal	25,0	20,1	1291022	1291122	50
TOP 260	23C	Standardni /normal	28,8	23,8	1291023	1291123	50
TOP 260	29	Standardni /normal	34,1	28,9	1291029	1291129	25

Schlemmer-Gigant NW 70 + NW 95

Schlemmer-Gigant NW 70 + NW 95

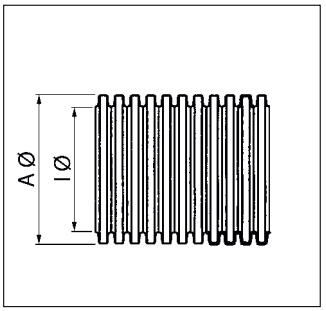

RoHS

Materijal:
PA6: poliamid 6
PPmod: modificirani polipropilen
Poly-Tyl (LD-PE): polietilen
TPU: termoplastični poliuretan (PUR)
ostali na upit

Radna temperatura:
PA6 HB: 3000 h: -40°C do 120°C
PA6 HB: 240 h: -40°C do 150°C

PPmod: 3000 h: -40°C do 135°C
PPmod: 500 h: -40°C do 150°C

LD-PE: 3000 h: -40°C do 80°C
LD-PE: 240 h: -40°C do 105°C

TPU (PUR): 3000 h: -40°C do 125°C
TPU (PUR): 240 h: -40°C do 150°C

Gorivost:
PA6 HB/Poly-Tyl (LD-PE)/TPU (PUR):
- UL 94: HB
- prema FMVSS 302: < 100 mm/min.

PPmod:
- UL 94: V2
- prema FMVSS 302: samogasiva

Boje/izvedbe/pakiranja:
- crna, siva

Pribor:
- Gigant pričvrsnice vidi poglavlje 2.2

Upotreba:
- npr. izgradnja postrojenja, industrija kućanskih aparata, tehnologija grijanja i klimatizacije, elektro industrija

Material:
PA6: Polyamide 6
PPmod: modified Polypropylene
Poly-Tyl (LD-PE): Polyethylene
TPU: Thermoplastic Polyurethane (PUR)
others on request

Temperature range:
PA6 HB: 3000 h: -40°C to 120°C
PA6 HB: 240 h: -40°C to 150°C

PPmod: 3000 h: -40°C to 135°C
PPmod: 500 h: -40°C to 150°C

LD-PE: 3000 h: -40°C to 80°C
LD-PE: 240 h: -40°C to 105°C

TPU (PUR): 3000 h: -40°C to 125°C
TPU (PUR): 240 h: -40°C to 150°C

Inflammability:
PA6 HB/Poly-Tyl (LD-PE)/TPU (PUR):
- UL 94: HB
- acc. to FMVSS 302: < 100 mm/min

PPmod:
- UL 94: V2
- acc. to FMVSS 302: selfextinguishing

Colour(s)/Designs:
- Black, grey

Accessories:
- Gigant Fixings see chapter 2.2

Applications:
- e.g. plant construction, home appliance industry, heating and air-conditioning installations, electrical industry

							kolut/Coil		
Materijal Material	NW NW	UL 94 UL 94	Gorivost prema FMVSS 302 Inflammability acc. to FMVSS 302	I-Ø mm I-Ø mm	A-Ø mm A-Ø mm	polumjer savijanja mm Bending radius mm	Broj artikla nerazrezane crna Art. no. unslit black	Broj artikla nerazrezane siva Art. no. unslit grey	JP kolut m PU ring m
PA6 HB	70	HB	< 100 mm/min.	66,5	79,2	170,0	1250053	1250050	10
PA6 HB	70	HB	< 100 mm/min.	66,5	79,2	170,0	1250055	1250052	25
PA6 HB	95	HB	< 100 mm/min.	91,0	106,0	225,0	1250060	1250063	10
PA6 HB	95	HB	< 100 mm/min.	91,0	106,0	225,0	1250062	1250065	25
PPmod	70	V2	samogasive /selfextinguishing	66,5	79,2	170,0	1253300	-	10
PPmod	70	V2	samogasive /selfextinguishing	66,5	79,2	170,0	1253302	-	25
PPmod	95	V2	samogasive /selfextinguishing	91,0	106,0	225,0	1253600	-	10
PPmod	95	V2	samogasive /selfextinguishing	91,0	106,0	225,0	1253602	-	25
Poly-Tyl (LD-PE)	70	HB	< 100 mm/min.	66,5	79,2	170,0	1253272	1253274	10
Poly-Tyl (LD-PE)	70	HB	< 100 mm/min.	66,5	79,2	170,0	1253271	1253270	25
Poly-Tyl (LD-PE)	95	HB	< 100 mm/min.	91,0	106,0	225,0	1253290	1253295	10
Poly-Tyl (LD-PE)	95	HB	< 100 mm/min.	91,0	106,0	225,0	1253292	1253297	25
TPU (PUR)	70	HB	< 100 mm/min.	66,5	79,2	170,0	1253400	1253450	10
TPU (PUR)	70	HB	< 100 mm/min.	66,5	79,2	170,0	1253402	1253452	25
TPU (PUR)	95	HB	< 100 mm/min.	91,0	106,0	225,0	1253700	1253750	10
TPU (PUR)	95	HB	< 100 mm/min.	91,0	106,0	225,0	1253703	-	21
TPU (PUR)	95	HB	< 100 mm/min.	91,0	106,0	225,0	-	1253752	25

POLYFLEX®

samozatvarajuće

POLYFLEX®

selfclosing

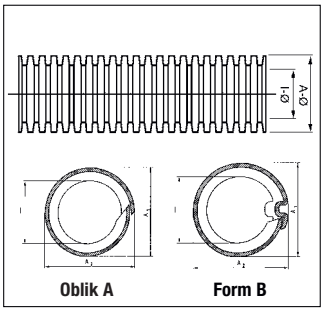

2.1

RoHS

Materijal:
PP-BS: polipropilen sa vatrozaštitom
PPmod: modificirani polipropilen
PAER: modificirani poliamid

Radna temperatura:
PP-BS: 3000 h: -40°C do 125°C
PP-BS: 500 h: -40°C do 135°C

PPmod: 3000 h: -40°C do 135°C
PPmod: 500 h: -40°C do 150°C

PAER: 3000 h: -40°C do 150°C
PAER: 240 h: -40°C do 175°C

Gorivost:
- prema FMVSS 302: samogasiva
- brzina izgaranja 0 prema DIN 75200

Boje/izvedbe/pakiranja:
- crna, ostale na upit
- komadno rezane na upit

Svojstva:
- ušteda na težini korištenjem najmanje NW (nominalne veličine)
- UV otpornost
- najmanji radijus savijanja
- nije potrebno omatanje samoljepljivom trakom na početku ili na kraju kabla

Upotreba:
- automobili i kamioni
- motorni prostor i instalacije u neposrednoj blizini motora
- pogodno za naknadnu ugradnju

Material:
PP-BS: Polypropylene with fire protection
PPmod: modified Polypropylene
PAER: modified Polyamide

Temperature range:
PP-BS: 3000 h: -40°C to 125°C
PP-BS: 500 h: -40°C to 135°C

PPmod: 3000 h: -40°C to 135°C
PPmod: 500 h: -40°C to 150°C

PAER: 3000 h: -40°C to 150°C
PAER: 240 h: -40°C to 175°C

Inflammability:
- acc. to FMVSS 302: selfextinguishing
- Burningrate 0 acc. to DIN 75200

Colour(s)/Designs:
- Black, others on request
- Cutted lengths on request

Characteristics:
- Reduction in weight by using the smallest NW
- UV-resistant
- Smallest bending radii
- No wrapping tape necessary at cable feeders or cable ends

Applications:
- Cars and heavy trucks
- Body section and near the engine
- For subsequent assembly

								kontejner/Container		kolut/Coil	
Materijal Material	Oblik Form	NW NW	Profil profile	UL 94 UL 94	A1 mm A1 mm	A2 mm A2 mm	l mm l mm	Broj artikla crna Art. no. black	JP m PU m	Broj artikla crna Art. no. black	JP m PU m
PP-BS	A	4,5L	Standardni	HB	7,3	8,0	5,1	1974014	6000	1974004	100
PP-BS	B	7,5L	normal	HB	10,2	10,7	7,2	1974017	3400	1974007	50
PP-BS	B	8,5L	Standardni	HB	11,6	12,0	8,9	1974018	2000	1974008	50
PP-BS	B	10L	normal	HB	12,8	13,3	10,2	1974020	2000	1974010	50
PP-BS	B	13L	Standardni	HB	15,3	16,1	12,4	1974023	1700	1974013	50
PP-BS	B	17L	normal	HB	21,4	20,9	17,3	1974047	1300	1974037	50
PP-BS	B	19L	Standardni	HB	23,4	24,3	19,2	1974029	900	1974039	50
PPmod	A	4,5L	Standardni	V2	7,3	8,1	5,1	1960000	6000	1960004	100
PPmod	B	7,5L	normal	V2	10,1	10,6	7,1	1960001	3400	1960007	50
PPmod	B	8,5L	Standardni	V2	11,6	12,0	8,9	1960002	2000	1960008	50
PPmod	B	10L	normal	V2	12,8	13,2	10,2	1960003	2000	1960010	50
PPmod	B	13L	Standardni	V2	15,3	16,1	12,4	1960005	1700	1960013	50
PPmod	B	17L	normal	V2	20,9	21,4	17,3	-	-	1960017	50
PPmod	B	19L	Standardni	V2	23,4	24,3	19,2	-	-	1960019	50
PAER	A	4,5L	Standardni	HB	7,4	7,8	5,1	1219014	5000	1219004	100
PAER	B	7,5L	normal	HB	10,2	10,7	7,1	1219017	3400	1219007	50
PAER	B	8,5L	Standardni	HB	12,0	12,3	8,9	1219018	2000	1219008	50
PAER	B	10L	normal	HB	12,6	13,3	9,9	1219020	2000	1219010	50
PAER	B	13L	Standardni	HB	16,0	16,9	12,3	1219023	1700	1219013	50
PAER	B	17L	normal	HB	21,5	22,4	17,3	1219037	1300	1219017	50
PAER	B	19L	Standardni	HB	23,7	24,7	19,3	1219029	900	1219019	50

POLYFLEX®

zabravljujuće

POLYFLEX®

lockable

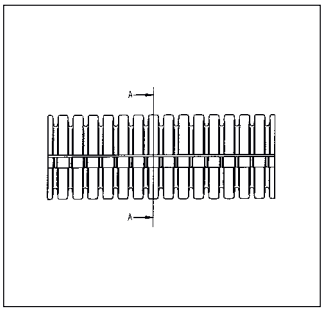

RoHS

Materijal:
PP-BS: polipropilen sa vatrozaštitom
PPmod: modificirani polipropilen
PAER: modificirani poliamid
ostali materijali na upit

Radna temperatura:
PP-BS: 3000 h: -40°C do 125°C
PP-BS: 500 h: -40°C do 135°C

PPmod: 3000 h: -40°C do 135°C
PPmod: 500 h: -40°C do 150°C

PAER: 3000 h: -40°C do 150°C
PAER: 240 h: -40°C do 175°C

Gorivost:
- prema FMVSS 302: samogasiva
- brzina izgaranja 0 prema DIN 75200

Boje/izvedbe/pakiranja:
- crna, ostale na upit
- komadno rezane i kontejner na upit

Svojstva:
- ušteda na težini korištenjem najmanje NW (nominalne veličine)
- najmanji radijus savijanja
- nije potrebno omatanje samoljepljivom trakom na početku ili na kraju kabla
- UV otpornost
- zabravljivanje moguće samo uz korištenje original Schlemmer alata za zabravljivanje.

Upotreba:
- automobili i kamioni
- motorni prostor i instalacije u neposrednoj blizini motora
- pogodno za naknadnu ugradnju

Material:
PP-BS: Polypropylene with fire protection
PPmod: modified Polypropylene
PAER: modified Polyamide
Further materials on request

Temperature range:
PP-BS: 3000 h: -40°C to 125°C
PP-BS: 500 h: -40°C to 135°C

PPmod: 3000 h: -40°C to 135°C
PPmod: 500 h: -40°C to 150°C

PAER: 3000 h: -40°C to 150°C
PAER: 240 h: -40°C to 175°C

Inflammability:
- acc. to FMVSS 302: selfextinguishing
- Burningrate 0 acc. to DIN 75200

Colour(s)/Designs:
- Black, others on request
- Cutted lengths and Containers on request

Characteristics:
- Reduction in weight by using the smallest NW
- Smallest bending radii
- No wrapping tape necessary at cable feeders or cable ends
- UV resistant
- Process safe locking only by using the original Schlemmer closing tool.

Applications:
- Cars and heavy trucks
- Body section and near the engine
- For subsequent assembly

Zatvarajuće
Closable

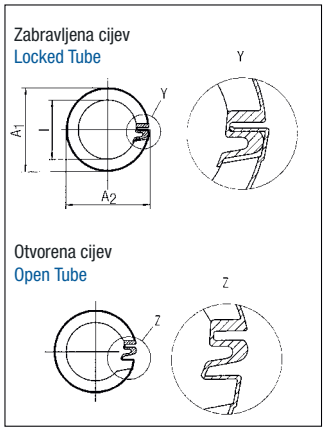

Materijal / Material	NW / NW	UL 94 / UL 94	odgovarajući pribor / suitable Accessories	A1 mm / A1 mm	A2 mm / A2 mm	l min / l min	kolut/Coil: Broj artikla crna / Art. no. black	kolut/Coil: JP m / PU m
PP-BS	11V	HB	NW 13	15,7	16,3	11,2	1955011	50
PP-BS	15V	HB	NW 17	21,3	22,0	14,9	1955015	50
PP-BS	19V	HB	NW 22	25,6	26,2	19,0	1955019	50
PP-BS	26V	HB	NW 26	31,5	32,0	24,6	1955026	25
PPmod	8,5V	V2	NW 10	12,8	13,3	8,6	1940008	50
PPmod	11V	V2	NW 13	15,7	16,3	11,2	1940011	50
PPmod	13V	V2	-	18,3	18,9	12,2	1940013	50
PPmod	15V	V2	NW 17	21,3	22,0	14,9	1940015	50
PPmod	19V	V2	NW 22	25,6	26,2	19,0	1940019	50
PPmod	26V	V2	NW 26	31,5	32,0	24,6	1940026	25
PAER	11V	HB	NW 13	15,9	16,3	11,1	1220011	50
PAER	13V	HB	-	18,5	18,8	12,2	1220013	50
PAER	15V	HB	NW 17	21,3	22,0	14,6	1220015	50
PAER	19V	HB	NW 22	26,0	25,8	19,0	1220019	50
PAER	26V	HB	NW 26	31,9	32,1	24,9	1220026	25

Ovalne zatvarajuće
Oval closable

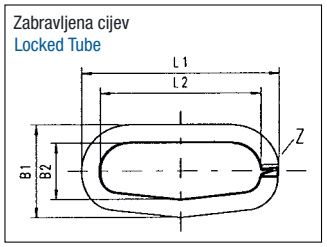

Materijal / Material	dužina komada mm / Cutted length mm	UL 94 / UL 94	L1 mm / L1 mm	L2 mm / L2 mm	B1 mm / B1 mm	B2 mm / B2 mm	Broj artikla crna / Art. no. black	JP m / PU m
PPmod	1200	V2	45,0	37,5	21,2	14,5	1948301	100

POLYFLEX®

Marderschutz

POLYFLEX®

Marten proof

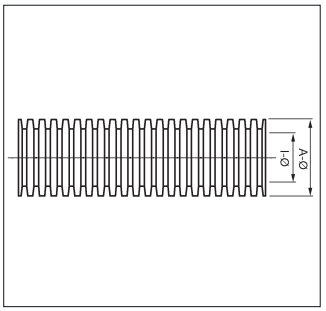

2.1

RoHS

Materijal:
polyamid 6

Radna temperatura:
3000 h: -40°C do 120°C
240 h: -40°C do 150°C

Gorivost:
- UL 94: HB
- prema FMVSS 302: < 100 mm/min.

Boje/izvedbe/pakiranja:
- crna, ostale na upit
- rezane duljine (rez na vrhu rebra) na upit
- komadno rezane na upit

Svojstva:
- dvostruka
- djeljiva po duljini
- zatvarajuća
- mogu se koristiti Schlemmer razdjeljnici, cijevne uvodnice i pribor

- visoka otpornost na promjene temperature okoline i istezanje
- stabilna pri savijanju
- izvrsna kemijska otpornost

Upotreba:
- idealna za rekonstrukcije i popravke
- profil otporan na glodavce za ugradnju u vozila i kamione
- motorni prostor i instalacije u neposrednoj blizini motora

Material:
Polyamide 6 HB

Temperature range:
3000 h: -40°C to 120°C
240 h: -40°C to 150°C

Inflammability:
- UL 94: HB
- Acc. to FMVSS 302: < 100 mm/min.

Colour(s)/Designs:
- Black, others on request
- Cutted lengths (cut on the crest) on request
- Containers on request

Characteristics:
- Two piece
- Longitudinal dividable
- Closable
- Schlemmer Manifolds, Conduit Glands and Accessories usable

- High cold impact strength and ultimate elongation
- Bending stabile
- Excellent chemical resistance

Applications:
- Ideal for retrofit and repair
- Marten proof for cars and heavy trucks
- Body section and near the engine

Profil otporan na glodavce
Martenproof profile

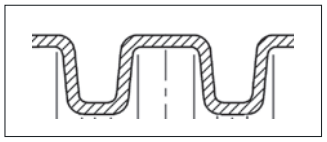

Materijal Material	NW NW	UL 94 UL 94	Gorivost Inflammability	A mm A mm	I mm I mm	kolut/Coil Broj artikla razrezane crna Art. no. slit black	m m
PA6	10	HB	< 100 mm/min.	13,3	8,5	sa ispisom	
						1245310	50
						bez ispisa	
						1245210	50

			Montažni komplet Assembly Pack	
PA6	5 m rebrasta cijev PA6, razrezana	5 m corrugated tube PA6, slit	1202868	1

POLYFLEX®

Twin PA6 HB

dvostruka + zatvarajući profil

RoHS

Materijal:
poliamid 6 HB

Radna temperatura:
3000 h: -40°C do 120°C
240 h: -40°C do 150°C

Gorivost:
- UL 94: HB
- prema FMVSS 302: < 100 mm/min.

Boje/izvedbe:
- crna, ostale na upit
- rezane duljine (rez na vrhu rebra) na upit
- kontejner na upit

Svojstva:
- dvostruka
- djeljiva po duljini
- zatvarajuća
- mogu se koristiti Schlemmer razdjeljnici, cijevne uvodnice i pribor
- visoka otpornost na promjene temperature okoline i istezanje
- bez halogena
- stabilna pri savijanju
- izvrsna kemijska otpornost

Upotreba:
- idealna za rekonstrukcije i popravke
- kao vodilica kablova u uredima i kućanstvima, npr. za računala, HiFi
- autoindustrija
- razvodni ormari
- kućanski aparati
- grijanje i klimatizacija
- elektroindustrija
- brodogradnja i tračnička vozila
- strojevi

POLYFLEX®

Twin PA6 HB

two piece + closable Profile

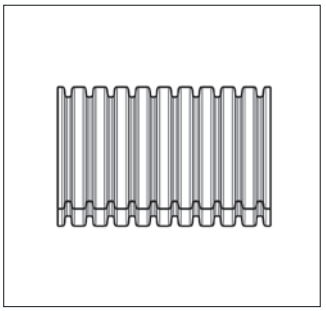

Material:
Polyamide 6 HB

Temperature range:
3000 h: -40°C to 120°C
240 h: -40°C to 150°C

Inflammability:
- UL 94: HB
- Acc. to FMVSS 302: < 100 mm/min.

Colour(s)/Designs:
- Black, others on request
- Cutted lengths (cut on the crest) on request
- Containers on request

Characteristics:
- Two piece
- Longitudinal dividable
- Closable
- Schlemmer Manifolds, Conduit Glands and Accessories usable
- High cold impact strength and ultimate elongation
- Free of halogene
- Bending stabile
- Excellent chemical resistance

Applications:
- Ideal for retrofit and repair
- As cable organizer for office and private sector e.g. Computer, HiFi
- Automotive Industries
- Switch cabinets
- Household Appliances
- Heating and air conditioning
- Electric Power Industry
- Ship- and train building
- Machines

				kolut / Coil		
NW NW	profil profile	A mm A mm	I mm I mm	broj artikla crna sa oznakom Art. no. black with marking	broj artikla crna bez oznake Art. no. black without marking	JP m PU m
7,5	standardni / normal	10,3	5,6	1245307	1245207	50
10	standardni / normal	13,3	8,5	1245310	1245210	50
13	standardni / normal	16,0	11,0	1245313	1245213	50
16	standardni / normal	19,0	13,0	1245316	1245216	50
17	standardni / normal	21,5	15,5	1245317	1245217	50
22	standardni / normal	25,6	19,1	1245322	1245222	50
23	standardni / normal	28,6	21,9	1245323	1245223	50
26	standardni / normal	31,7	24,0	1245326	1245226	25
29	standardni / normal	35,0	27,2	1245329	1245229	25
37	standardni / normal	42,5	32,0	1245337	1245237	25
50	standardni / normal	53,9	43,9	1245350	1245250	25
70	standardni / normal	79,0	62,2	1245370	1245270	10

POLYFLEX®

Twin PA6 VO

dvostruka + zatvarajući profil

POLYFLEX®

Twin PA6 VO

two piece + closable Profile

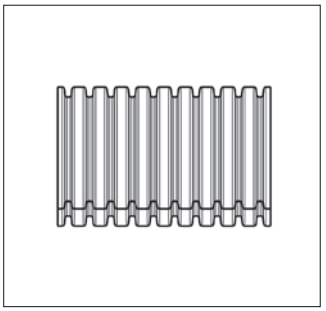

2.1

RoHS

Materijal:
poliamid 6

Radna temperatura:
3000 h: -40°C do 120°C
240 h: -40°C do 150°C

Gorivost:
- UL 94: VO
- prema FMVSS 302: samogasiva

Boje/izvedbe:
- crna, ostale na upit
- rezane duljine (rez na vrhu rebra) na upit
- kontejner na upit

Svojstva:
- dvostruka
- djeljiva po duljini
- zatvarajuća
- mogu se koristiti Schlemmer razdjeljnici, cijevne uvodnice i pribor
- visoka otpornost na promjene temperature okoline i istezanje
- bez halogena
- stabilna pri savijanju
- izvrsna kemijska otpornost

Upotreba:
- idealna za rekonstrukcije i popravke
- kao vodilica kablova u uredima i kućanstvima, npr. za računala, HiFi
- autoindustrija
- razvodni ormari
- kućanski aparati
- grijanje i klimatizacija
- elektroindustrija
- brodogradnja i tračnička vozila
- strojevi

Material:
Polyamide 6

Temperature range:
3000 h: -40°C to 120°C
240 h: -40°C to 150°C

Inflammability:
- UL 94: VO
- Acc. to FMVSS 302: self-extinguishing

Colour(s)/Designs:
- Black, others on request
- Cutted lengths (cut on the crest) on request
- Containers on request

Characteristics:
- Two piece
- Longitudinal dividable
- Closable
- Schlemmer Manifolds, Conduit Glands and Accessories usable
- High cold impact strength and ultimate elongation
- Free of halogene
- Bending stabile
- Excellent chemical resistance

Applications:
- Ideal for retrofit and repair
- As cable organizer for office and private sector e.g. Computer, HiFi
- Automotive Industries
- Switch cabinets
- Household Appliances
- Heating and air conditioning
- Electric Power Industry
- Ship- and train building
- Machines

				kolut / Coil		
NW NW	profil profile	A mm A mm	l mm l mm	broj artikla crna sa oznakom Art. no. black with marking	broj artikla crna bez oznake Art. no. black without marking	JP m PU m
7,5	standardni / normal	10,3	5,6	1206807	1206707	50
10	standardni / normal	13,3	8,5	1206810	1206710	50
13	standardni / normal	16,0	11,0	1206813	1206713	50
16	standardni / normal	19,0	13,0	1206816	1206716	50
17	standardni / normal	21,5	15,5	1206817	1206717	50
22	standardni / normal	25,6	19,1	1206822	1206722	50
23	standardni / normal	28,5	21,9	1206823	1206723	50
26	standardni / normal	31,7	24,0	1206826	1206726	25
29	standardni / normal	35,0	27,2	1206829	1206729	25
37	standardni / normal	42,5	32,0	1206837	1206737	25
50	standardni / normal	53,9	43,9	1206850	1206750	25
70	standardni / normal	79,0	62,2	1206870	1206770	10

POLYFLEX®

Twin PPmod

dvostruka + zatvarajući profil

RoHS

Materijal:
modificirani polipropilen

Radna temperatura:
3000 h: -40°C do 135°C
240 h: -40°C do 150°C

Gorivost:
- UL 94: V2
- prema FMVSS 302: samogasiva

Boje/izvedbe:
- crna, ostale na upit
- rezane duljine (rez na vrhu rebra) na upit
- kontejner na upit

Svojstva:
- dvostruka
- djeljiva po duljini
- zatvarajuća
- mogu se koristiti Schlemmer razdjeljnici, cijevne uvodnice i pribor
- visoka otpornost na promjene temperature okoline i istezanje
- stabilna pri savijanju
- izvrsna kemijska otpornost

POLYFLEX®

Twin PPmod

two piece + closable Profile

Upotreba:
- idealna za rekonstrukcije i popravke
- kao vodilica kablova u uredima i kućanstvima, npr. za računala, HiFi
- autoindustrija
- razvodni ormari
- kućanski aparati
- grijanje i klimatizacija
- elektroindustrija
- brodogradnja i tračnička vozila
- strojevi

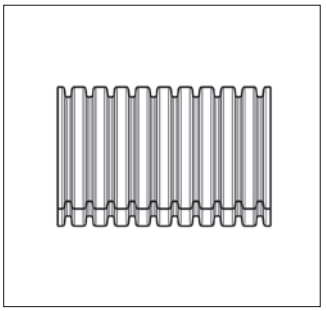

Material:
Polypropylene modified

Temperature range:
3000 h: -40°C to 135°C
240 h: -40°C to 150°C

Inflammability:
- UL 94: V2
- Acc. to FMVSS 302: self-extinguishing

Colour(s)/Designs:
- Black, others on request
- Cutted lengths (cut on the crest) on request
- Containers on request

Characteristics:
- Two piece
- Longitudinal dividable
- Closable
- Schlemmer Manifolds, Conduit Glands and Accessories usable
- High cold impact strength and ultimate elongation
- Bending stabile
- Excellent chemical resistance

Applications:
- Ideal for retrofit and repair
- As cable organizer for office and private sector e.g. Computer, HiFi
- Automotive Industries
- Switch cabinets
- Household Appliances
- Heating and air conditioning
- Electric Power Industry
- Ship- and train building
- Machines

				kolut / Coil		
NW NW	profil profile	A mm A mm	l mm l mm	broj artikla crna sa oznakom Art. no. black with marking	broj artikla crna bez oznake Art. no. black without marking	JP m PU m
7,5	standardni / normal	10,3	5,6	1922407	1922007	50
10	standardni / normal	13,3	8,5	1922410	1922010	50
13	standardni / normal	16,0	11,0	1922413	1922013	50
16	standardni / normal	18,9	13,0	1922416	1922016	50
17	standardni / normal	21,3	15,1	1922417	1922017	50
22	standardni / normal	25,4	19,6	1922422	1922022	50
23	standardni / normal	28,1	21,6	1922423	1922023	50
26	standardni / normal	31,5	24,0	1922426	1922026	25
29	standardni / normal	34,4	26,6	1922429	1922029	25
37	standardni / normal	42,7	31,8	1922437	1922037	25
50	standardni / normal	53,9	43,9	1922450	1922050	25
70	standardni / normal	78,0	60,5	1922470	1922070	10

POLYFLEX®

Twin PP-UV

dvostruka + zatvarajući profil

POLYFLEX®

Twin PP-UV

two piece + closable Profile

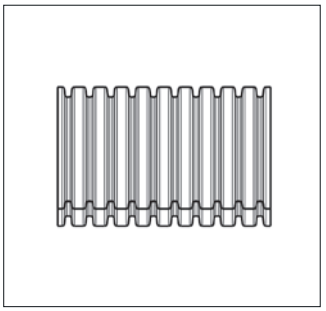

2.1

RoHS

Materijal:
modificirani polipropilen

Radna temperatura:
3000 h: -40°C do 100°C
240 h: -40°C do 125°C

Gorivost:
- UL 94: HB
- prema FMVSS 302: < 100 mm/min.

Boje/izvedbe:
- crna, ostale na upit
- rezane duljine (rez na vrhu rebra) na upit
- kontejner na upit

Svojstva:
- posebno otporna na UV zračenje
- dvostruka
- djeljiva po duljini
- zatvarajuća
- mogu se koristiti Schlemmer razdjeljnici, cijevne uvodnice i pribor
- visoka otpornost na promjene temperature okoline i istezanje
- stabilna pri savijanju
- izvrsna kemijska otpornost

Upotreba:
- idealna za rekonstrukcije i popravke na otvorenom
- solarna tehnologija
- fotonaponski sustavi
- SAT sustavi
- autoindustrija
- razvodni ormari
- kućanski aparati
- grijanje i klimatizacija
- elektroindustrija
- brodogradnja i tračnička vozila

Material:
Polypropylene modified

Temperature range:
3000 h: -40°C to 100°C
240 h: -40°C to 125°C

Inflammability:
- UL 94: HB
- Acc. to FMVSS 302: < 100 mm/min.

Colour(s)/Designs:
- Black, others on request
- Cutted lengths (cut on the crest) on request
- Containers on request

Characteristics:
- Specially stabilized against UV-radiation
- Two piece
- Longitudinal dividable
- Closable
- Schlemmer Manifolds, Conduit Glands and Accessories usable
- High cold impact strength and ultimate elongation
- Bending stabile
- Excellent chemical resistance

Applications:
- Ideal for retrofit and repair outdoors
- Solar technology
- Photovoltaics
- SAT reception units
- Automotive Industries
- Switch cabinets
- Household Appliances
- Heating and air conditioning
- Electric Power Industry
- Ship- and train building

				kolut / Coil		
NW NW	profil profile	A mm A mm	l mm l mm		broj artikla crna bez oznake Art. no. black without marking	JP m PU m
7,5	standardni / normal	10,3	5,6		1922307	50
10	standardni / normal	13,3	8,5		1922310	50
13	standardni / normal	16,0	11,0		1922313	50
16	standardni / normal	18,9	13,0		1922316	50
17	standardni / normal	21,3	15,1		1922317	50
22	standardni / normal	25,4	19,6		1922322	50
23	standardni / normal	28,1	21,6		1922323	50
26	standardni / normal	31,5	24,0		1922326	25
29	standardni / normal	34,4	26,6		1922329	25
37	standardni / normal	42,7	31,8		1922337	25
50	standardni / normal	53,9	43,9		1922350	25
70	standardni / normal	78,0	60,5		1922370	10

Alati za montažu
za umetanje vodiča u razrezane rebraste cijevi

Upotreba:
Za sve razrezane rebraste cijevi

Napomena:
Rubrika za nominalnu veličinu (NW) je samo preporuka i ovisi o količini vodiča koje treba umetnuti.

Assembly Tools
for inserting wires into slit corrugated tubes

Applications:
For all slit corrugated tubes

Note:
The use for nominal size (NW) is only a recommendation and depends on the respective filling level.

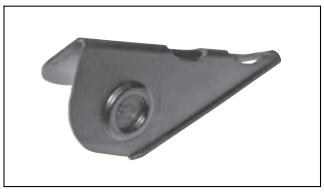

Opis / Description	Materijal / Material	Profil / Profile	za NW cca. / for NW approx.	Broj artikla / Art. no.	JP kom. / PU pcs.
Univerzalni montažni alat, mali	PA66	Stand. /normal	4,5 - 10	9001515	1
Universal Assembly tool, small	PA66	UFW/ UFW	4,5 - 10	9001515	1
	PA66	AHW/ AHW	4,5 - 8,5	9001515	1
	PA66	samozatvarajući selfclosing	4,5L - 10L	9001515	1

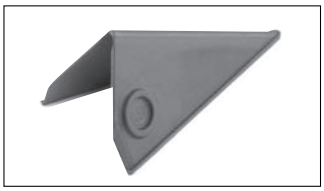

Univerzalni montažni alat, srednji	PA66	Stand. /normal	7,5 - 12	9001543	1
Universal Assembly tool, middle	PA66	AHW/ AHW	4,5 - 8,5	9001543	1
Univerzalni montažni alat, veliki	PA66	Stand. /normal	od 12/ from 12	9001550	1
Universal Assembly tool, big	PA66	UFW/ UFW	od 13/ from 13	9001550	1
	PA66	AHW/ AHW	od 11/ from 11	9001550	1
	PA66	samozatvarajući selfclosing	od 13L/ from 13L	9001550	1

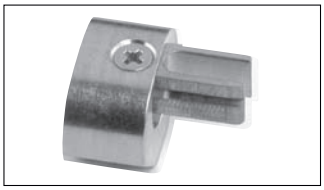

Montažni alat	Metal / metal	Stand. /normal	4,5	9001524	1
Assembly tool	Metal / metal	Stand. /normal	7,5	9001527	1
	Metal / metal	Stand. /normal	10	9001530	1
	Metal / metal	Stand. /normal	13	9001533	1
	Metal / metal	Stand. /normal	17	9001537	1
	Metal / metal	Stand. /normal	22	9001542	1
	Metal / metal	Stand. /normal	29 S	9001544	1
	Metal / metal	AHW/ AHW	4,5	9001524	1
	Metal / metal	AHW/ AHW	6	9001527	1
	Metal / metal	AHW/ AHW	8,5	9001530	1
	Metal / metal	AHW/ AHW	11	9001533	1
	Metal / metal	AHW/ AHW	13 S	9001534	1
	Metal / metal	AHW/ AHW	15	9001537	1
	Metal / metal	AHW/ AHW	19	9001542	1
	Metal / metal	AHW/ AHW	23 S	9001545	1

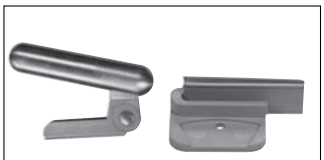

Metal / metal PA66-GF

Montažni alat za optička vlakna	PA66-GF	Stand. /normal	3	9001540	1
Assembly tool for fiber optics	Metal / metal	Stand. /normal	3	9001539	1

Alat za zatvaranje zabravljujućih rebrastih cijevi	PA66-GF	zabravljujući	8,5	9001558	1
za montažni alat vidi: Univerzalni montažni alat. veliki	PA66-GF	lockable	11	9001561	1
	PA66-GF	zabravljujući	13	9001552	1
Closing Tool for lockable corrugated tube	PA66-GF	lockable	15	9001567	1
Assembly tool see Universal Mounting-tool, big	PA66-GF	zabravljujući	19	9001555	1
	PA66-GF	lockable	26	9001564	1

Alati za rezanje
rebrastih cijevi

Cutting Tools
for Corrugated tubes

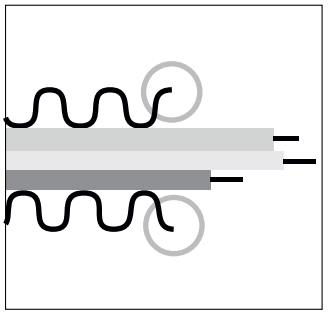

rez na vrhu rebra

Sve Schlemmer rebraste cijevi prerezane su na vrhu rebra.
Na taj način se izbjegava oštećivanje vodiča koji se nalaze u unutrašnjosti.

cut on the crest

All Schlemmer corrugated tubes are cut on the crest.
This avoids the abrasion of inside lying wires.

2.1

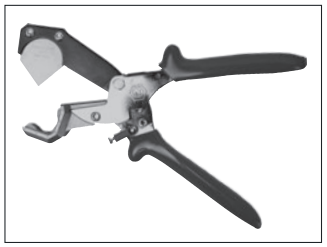

Opis Description	za profil for Profile	NW NW	Broj artikla Art. no.	JP kom. PU pcs.
Kiješta za rebraste cijevi / uklj. 3 zamjenske oštrice	standard./normal	do/to 17	9001450	1
Corrugated tube Pliers/incl. 3 replacement blades	AHW/AHW	do/to 15	9001450	1
zamjenske oštrice/ Replacement blades			9001451	10
Kiješta za rezanje razrezanih rebrastih cijevi UFW /	UFW/UFW	4,5 - 22	9000160	1
Cutting pliers for slited corrugated tube UFW	standard./normal	4,5 - 22	9000163	1
	JIS/JIS	4,5 - 22	9000163	1
	AHW/AHW	4,5 - 22	9000163	1
zamjenske oštrice za / Replacement blades for			9000170	3
Univerzalna kliješta za rezanje zatvorenih	UFW/UFW	4,5 - 22	9000151	1
rebrastih cijevi od PP / PA / *		23 - 37	9000152	1
Universal cutting pliers for unslited corrugated	standard./normal	4,5 -13	9000153	1
tubes made of PP / PA / *		14 - 37	9000154	1
	JIS/JIS	5F - 13F	9000153	1
		15F - 28F	9000154	1
	AHW/AHW	6 u. 6S	9000153	1
		8,5 - 34 u.13HF	9000154	1
zamjenske oštrice za / Replacement blades for	9000152 / 9000154		9000156	10
zamjenske oštrice za / Replacement blades for	9000153 / 9000151		9000155	10

*mekše rebraste cijevi mogu se rezati pod određenim uvjetima / *softer corrugated tubes can be cut under conditions

Zaštitne cijevi + cijevne uvodnice

	stranica
SEMI FAST uvodnica cijevna	
ravna	40
koljeno 90°	41
kombinirana	42
O-brtva	43
Gigant pričvrsnice	44
Cijev zaštitna Rakkordflex SF	45
• odgovarajuće uvodnice:	
- SF uvodnica	46
- NH ravna	47 - 48
- NH kutna 90°	49
• pribor za NH cijevne uvodnice:	
- stezni prsten za brtvljenje + stezni prsten	50
- Nosač uvodnica univerzalni - tip UVH	51
Žičana pletenica tip HG	52
Cijev izolirajuća bez vlakana	53
Cijev zaštitna Rakkord-DU	54
• odgovarajuće uvodnice:	
- serija 75	55
Cijev zaštitna Rakkord (Vinnylan)	56
• odgovarajuće uvodnice:	
- KSV	57
Schlemmer-Flex	
K-PVC	58
KUW-PVC	59
KUW-PUR	60
• odgovarajuće uvodnice:	
- LK	61
- LKH sa montažnom prirubnicom	62
Cijev metalna MS-B	63
• odgovarajuće uvodnice:	
Rakkord MS-B	64 - 65
Cijev metalna MS-PU	66
Cijev metalna MS-PVC	67
• odgovarajuće uvodnice:	
- Rakkord MS-PU/MS-PVC	68 - 69
- FD	70
Cijev metalna MS-DU	71
• odgovarajuće uvodnice:	
- Rakkord MS-DU	72 - 73
Cijev metalna MS-PVC-DU	74
• odgovarajuće uvodnice:	
- Rakkord MS-PVC-DU	75 - 76
ANACONDA	
Sealtite E.F.	77
Sealtite O.R.	78
Sealtite H.C.	79
Sealtite H.C.X.	80
Sealtite H.F.X.	81
Sealtite H.T.D.L.	82
Sealtite N.M.U.A.	83
Multiflex U.I.	84
Multiflex U.I.G.	85
• Pribor Multiflex:	
- Tuljak za uzemljenje sa steznim prstenom	86
• odgovarajuće uvodnice za Sealtite + Multiflex:	
- ravna	87
- kutna 45°	88
- kutna 90°	88
- ravna sa unutarnjim navojem	89
- kombinirana	89
- COMPACT	90
Plastična spiralna traka	91

Protection Conduit + Glands

	page
SEMI FAST Conduit Gland	
straight	40
90° elbow	41
Combi	42
O-ring sealing	43
Gigant Fixings	44
Protection tube Rakkordflex SF	45
• suitable glands:	
- SF gland	46
- NH straight	47 - 48
- NH 90°	49
• NH Accessoires:	
- Clamp sealing + Clamping ring	50
- Gland-Holder UVH	51
Wire braiding HG	52
Non-fibrous insulating tubes	53
Protection tube Rakkord-DU	54
• suitable gland:	
- series 75	55
Protection tube Rakkord (Vinnylan)	56
• suitable gland:	
- KSV	57
Schlemmer Flex	
K-PVC	58
KUW-PVC	59
KUW-PUR	60
• suitable glands:	
- LK	61
- LKH with mounting flange	62
Metal tube Bare MS-B	63
• suitable gland:	
- Rakkord MS-B	64 - 65
Metal tube MS-PU	66
Metal tube MS-PVC	67
• suitable glands:	
- Rakkord MS-PU/MS-PVC	68 - 69
- FD	70
Metal tube MS-DU	71
• suitable gland:	
- Rakkord MS-DU	72 - 73
Metal tube MS-PVC-DU	74
• suitable gland:	
- Rakkord MS-PVC-DU	75 - 76
ANACONDA	
Sealtite E.F.	77
Sealtite O.R.	78
Sealtite H.C.	79
Sealtite H.C.X.	80
Sealtite H.F.X.	81
Sealtite H.T.D.L.	82
Sealtite N.M.U.A.	83
Multiflex U.I.	84
Multiflex U.I.G.	85
• Accessories Multiflex	
- Earthing sleeve with clamping ring	86
• suitable glands for Sealtite + Multiflex:	
- straight	87
- 45° angle	88
- 90° angle	88
- straight internal thread	89
- Combi	89
- COMPACT	90
Plastic spiral binding	91

SEM-FAST
ravna

SEM-FAST
straight

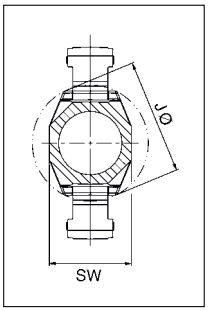

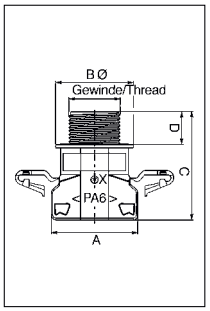

RoHS | IP 65-68** | UL-Nr.: E81472

Materijal:
poliamid 6

Radna temperatura:
-40°C do 120°C

Gorivost:
- po FMVSS 302: < 100 mm/min

Boje/izvedbe/pakiranja:
- crna, siva
- vanjski navoj: metrički/PG

Svojstva:
- konična brtva na rebrastoj cijevi
- brtvljenje pomoću brtvenih lamela
- poseban „click-in“ sustav
- jednostavna i brza montaža: cijev se umeće u "zatvorenu" uvodnicu
- cijev se može okretati unutar uvodnice
- visoka vlačna čvrstoća
- bez halogena

Pribor:
- O-brtva

Upotreba:
- odgovara za profile: standardni, UFW
- izrada strojeva i aparata
- brodogradnja i proizvodnja vlakova
- industrija vozila
- razvodni ormari
- Napomena: za UL sukladnost artikla pogledajte na www.UL.com

Material:
Polyamide 6

Temperature range:
-40°C to 120°C

Inflammability:
- acc. to FMVSS 302: < 100 mm/min.

Colour(s)/Designs:
- Black, grey
- External thread: metric/PG

Characteristics:
- Conical sealing on corrugated tube
- Thread sealing by sealing bars
- Special click-in system
- Easy and tight assembly: Insert tube in the „closed“ gland
- Tube is turnable within the gland
- High tensile strength
- Free of halogen

Accessories:
- O-Ring sealing

Applications:
- Suitable for profiles: normal, UFW
- Machine- and apparatus engineering
- Ship- and trainbuilding
- Vehicle industries
- Switch cabinets
- Note: For UL article approval, see www.ul.com

2.2

Vanjski navoj / External Thread	za NW mm / for NW mm	SW mm / SW mm	A mm / A mm	B Ø mm / B Ø mm	C mm / C mm	D mm / D mm	najmanji I Ø mm / smallest I Ø	J Ø mm / J Ø mm	Broj artikla crna / Art.-No. black	Broj artikla siva / Art.-No. grey	JP komad / PU pcs.	JP po kartonu / PU per covering box pcs.
PG / PG												
PG 7	7,5	14,0	19,0	18,0	34,0	11,0	7,5	21,0	3805028	3805128	50	3200
PG 7	8,5	16,0	20,6	20,0	35,0	11,0	7,5	23,0	3805012	3805112	50	3200
PG 7	10	17,0	21,6	22,0	36,0	12,0	9,0	24,5	3805024	3805124	50	1800
PG 9	10	17,0	21,6	22,0	36,0	12,0	11,0	24,5	3805004	3805104	50	1800
PG 9	12+13	20,0	25,5	25,0	38,0	12,0	11,0	29,0	3805037	3805137	50	1800
PG 11	10	17,0	21,6	22,0	36,0	12,0	12,5	24,5	3805050	3805150	50	1800
PG 11	12+13	20,0	25,5	25,0	38,0	12,0	14,5	29,0	3805009	3805109	50	1800
PG 13,5	10	17,0	21,6	25,0	36,0	12,0	12,5	24,5	3805064		50	1800
PG 13,5	12+13	20,0	25,5	25,0	38,0	12,0	15,2	29,0	3805010	3805110	50	1800
PG 13,5	17	27,0	34,5	31,0	43,0	13,0	15,4	38,5	3805005	3805105	50	800
PG 16	17	27,0	34,5	31,0	43,0	13,0	18,1	38,5	3805006	3805106	50	800
PG 21	22	32,0	40,5	36,0	48,0	13,0	23,0	45,5	3805023	3805123	25	400
PG 21	23	34,0	42,5	38,0	48,0	13,0	23,0	48,5	3805014	3805114	25	400
PG 29	29	41,0	49,5	46,0	52,0	15,0	31,0	55,5	3805016	3805116	20	320
PG 36	37	50,0	59,0	55,0	62,0	17,0	39,0	66,5	3805018	3805118	10	160
PG 48	50	64,0	72,0	72,0	68,0	19,0	43,5	80,0	3805021	3805121	5	120
metrički / metric												
M 12 x 1,5	7,5	14,0	19,0	18,0	34,0	11,0	7,5	21,0	3805047	3805147	50	3200
M 12 x 1,5	8,5	16,0	20,6	20,0	35,0	11,0	7,5	23,0	3805011	3805111	50	3200
M 12 x 1,5	10	17,0	21,6	22,0	36,0	12,0	7,5	24,5	3805000	3805100	50	1800
M 16 x 1,5	10	17,0	21,6	22,0	36,0	12,0	11,0	24,5	3805001	3805101	50	1800
M 16 x 1,5	12+13	20,0	25,5	25,0	38,0	12,0	11,0	29,0	3805007	3805107	50	1800
M 20 x 1,5	12+13	20,0	25,5	25,0	38,0	12,0	15,2	29,0	3805008	3805108	50	1800
M 20 x 1,5	17	27,0	34,5	31,0	43,0	13,0	15,4	38,5	3805002	3805102	50	800
M 25 x 1,5	17	27,0	34,5	31,0	43,0	13,0	19,1	38,5	3805003	3805103	50	800
M 25 x 1,5	22	32,0	40,5	36,0	48,0	13,0	25,0	45,5	3805022	3805122	25	400
M 25 x 1,5	23	34,0	42,5	38,0	48,0	13,0	19,1	48,5	3805013	3805113	25	400
M 32 x 1,5	29	41,0	49,5	46,0	52,0	15,0	25,5	55,5	3805015	3805115	20	320
M 40 x 1,5	37	50,0	59,0	55,0	62,0	17,0	34,0	66,5	3805017	3805117	10	160
M 50 x 1,5	50	64,0	72,0	72,0	68,0	19,0	43,5	80,0	3805019	3805119	5	120
M 63 x 1,5	50	64,0	72,0	72,0	68,0	19,0	53,2	80,0	3805020	3805120	5	120

Montaža /Assembly

IP 68**
Kako biste postigli nivo zaštite IP 68, umetnite O-brtvu u prvi utor do reza rebraste cijevi sa montažne strane cijevi. Za standardni profil NW50 umetnite dvije O-brtve u prvi i drugi utor cijevi.

To achieve the protection class IP 68, slip the O ring into the first groove of the cut end of the corrugated tube section on the screw side. For normal profiled size NW 50 slip two O ring sealings into the first and second groove of the tube.

Prerežite cijev po vrhu rebra (optimalna zaštita cijevi i konektora).
Separate the tube at a corrugation crest (optimal protection of the tube and connector)

Laganim uvijanjem umetnite cijev u zatvorenu uvodnicu dok ne dođe do kraja.
Insert the tube in the closed gland with a slight twist until the collar stop

Polagano povucite rebrastu cijev unatrag, čime učvršćujete cijev unutar uvodnice.
Slightly pull back the tube in the gland (to latch securely)

SEM-FAST koljeno 90°

SEM-FAST 90° elbow

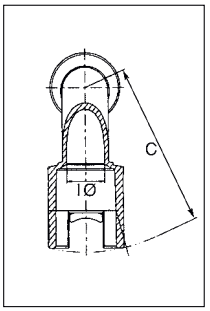

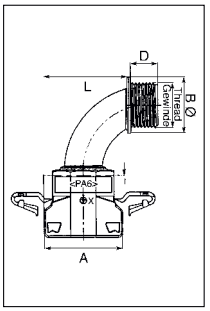

RoHS | IP 65-68** | UL-Nr.: E81472

Materijal:
poliamid 6

Radna temperatura:
-40°C do 120°C

Gorivost:
- po FMVSS 302: < 100 mm/min

Boje/izvedbe/pakiranja:
- crna, siva
- vanjski navoj: metrički/PG

Svojstva:
- konična brtva na rebrastoj cijevi
- brtvljenje pomoću brtvenih lamela
- poseban „click-in“ sustav
- jednostavna i brza montaža: cijev se umeće u "zatvorenu" uvodnicu
- cijev se može okretati unutar uvodnice
- visoka vlačna čvrstoća
- bez halogena

Pribor:
- O-brtva

Upotreba:
- odgovara za profile: standardni, UFW
- izrada strojeva i aparata
- brodogradnja i proizvodnja vlakova
- industrija vozila
- razvodni ormari
- Napomena: za UL sukladnost artikla pogledajte na www.UL.com

Material:
Polyamide 6

Temperature range:
-40°C to 120°C

Inflammability:
- acc. to FMVSS 302: < 100 mm/min.

Colour(s)/Designs:
- Black, grey
- External thread: metric/PG

Characteristics:
- Conical sealing on corrugated tube
- Thread sealing by sealing bars
- Special click-in system
- Easy and tight assembly: Insert tube in the „closed“ gland
- Tube is turnable within the gland
- High tensile strength
- Free of halogen

Accessories:
- O-Ring sealing

Applications:
- Suitable for profiles: normal, UFW
- Machine- and apparatus engineering
- Ship- and trainbuilding
- Vehicle industries
- Switch cabinets
- Note: For UL article approval, see www.ul.com

2.2

Vanjski navoj External Thread	za NW mm for NW mm	A mm A mm	B Ø mm B Ø mm	C mm C mm	D mm D mm	najmanji I Ø smallest I Ø	L mm L mm	Broj artikla crna Art.-No. black	Broj artikla siva Art.-No. grey	JP komad PU pcs.	JP po kartonu PU per covering pcs.
PG / PG											
PG 9	10	21,6	20,0	50,0	12,0	9,5	29,0	3805201	3805301	50	1800
PG 11	12 + 13	25,5	25,0	54,6	12,0	13,5	34,0	3805207	3805307	50	1000
PG 13,5	17	34,5	25,0	59,7	12,0	13,5	38,5	3805214	3805314	25	500
PG 16	17	34,5	31,0	65,8	13,0	17,0	44,5	3805213	3805313	25	500
PG 21	23	42,5	38,0	74,1	13,0	23,0	51,5	3805219	3805319	20	320
PG 29	29	49,5	48,0	86,8	15,0	31,0	63,5	3805225	3805325	10	120
PG 36	37	59,0	56,0	104,8	17,0	39,5	74,5	3805231	3805331	10	80
PG 48	50	72,0	72,0	129,0	19,0	51,5	99,8	3805237	3805337	5	40
metrički / metric											
M 16 x 1,5	10	21,6	20,0	50,0	12,0	9,5	29,0	3805200	3805300	50	1800
M 16 x 1,5	12 + 13	25,5	20,0	52,7	12,0	9,5	30,5	3805205	3805305	50	1000
M 20 x 1,5	12 + 13	25,5	25,0	54,6	12,0	13,5	34,0	3805206	3805306	50	1000
M 20 x 1,5	17	34,5	25,0	59,7	12,0	13,5	38,5	3805211	3805311	25	500
M 25 x 1,5	17	34,5	31,0	65,8	13,0	17,0	44,5	3805212	3805312	25	500
M 25 x 1,5	23	42,5	31,0	71,3	13,0	17,0	48,5	3805217	3805317	20	320
M 32 x 1,5	23	42,5	38,0	74,1	13,0	23,0	51,5	3805218	3805318	20	320
M 32 x 1,5	29	49,5	38,0	77,2	13,0	23,0	54,5	3805223	3805323	10	120
M 40 x 1,5	29	49,5	48,0	86,8	15,0	31,0	63,5	3805224	3805324	10	120
M 40 x 1,5	37	59,0	48,0	95,6	15,0	31,0	68,5	3805229	3805329	10	80
M 50 x 1,5	37	59,0	56,0	104,8	17,0	39,5	74,5	3805230	3805330	10	80
M 50 x 1,5	50	72,0	56,0	111,2	17,0	39,5	90,0	3805235	3805335	5	40
M 63 x 1,5	50	72,0	72,0	129,0	19,0	51,5	99,8	3805236	3805336	5	40

Montaža /Assembly

IP 68**
Kako biste postigli nivo zaštite IP 68, umetnite O-brtvu u prvi utor do reza rebraste cijevi sa montažne strane cijevi. Za standardni profil NW50 umetnite dvije O-brtve u prvi i drugi utor cijevi.

To achieve the protection class IP 68, slip the O ring into the first groove of the cut end of the corrugated tube section on the screw side. For normal profiled size NW 50 slip two O ring sealings into the first and second groove of the tube.

Prerežite cijev po vrhu rebra (optimalna zaštita cijevi i konektora).
Separate the tube at a corrugation crest (optimal protection of the tube and connector)

Laganim uvijanjem umetnite cijev u zatvorenu uvodnicu dok ne dođe do kraja.
Insert the tube in the closed gland with a slight twist until the collar stop

Polagano povucite rebrastu cijev unatrag, čime učvršćujete cijev unutar uvodnice.
Slightly pull back the tube in the gland (to latch securely)

SEM-FAST

Kombinirana

SEM-FAST

Combi

RoHS | IP 65-68**

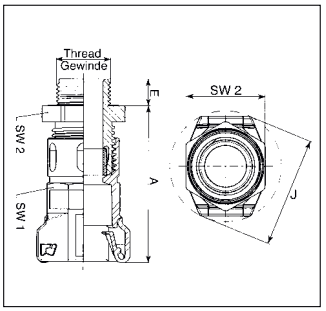

Materijal:
poliamid 6
brtva: Neopren

Radna temperatura:
-25°C do 100°C

Gorivost:
- po FMVSS 302: < 100 mm/min

Boje/izvedbe/pakiranja:
- crna
- vanjski navoj: metrički/PG
- dvodjelna plastična uvodnica

Svojstva:
- konična brtva na rebrastoj cijevi
- brtvljenje pomoću brtvenih lamela
- IP 68 na strani kućišta samo za navedeni raspon promjera vodiča
- zaštita od izvlačenja vodiča
- poseban „click-in" sustav
- jednostavna i brza montaža: cijev se umeće u "zatvorenu" uvodnicu
- cijev se može okretati unutar uvodnice
- visoka vlačna čvrstoća
- bez halogena

Pribor:
- O-brtva
- može se kombinirati sa Schlemmer-Tec brtvama sa više otvora

Upotreba:
- odgovara za profile: standardni, UFW
- izrada strojeva i aparata
- brodogradnja i proizvodnja vlakova
- industrija vozila
- razvodni ormari

Material:
Polyamide 6
Sealing: Neoprene

Temperature range:
-25°C to 100°C

Inflammability:
- acc. to FMVSS 302: < 100 mm/min.

Colour(s)/Designs:
- Black
- External thread: Metric/PG
- Two part plastic gland

Characteristics:
- Conical sealing on corrugated tube
- Thread sealing by sealing bars
- IP 68 on housing side within the specified clamping range
- Traction relief through clamping lamella
- Special click-in system
- Easy and tight assembly: Insert tube in the „closed" gland
- Tube is turnable within the gland
- High tensile strength
- Free of halogen

Accessories:
- O-Ring sealing
- Can be combined with the Schlemmer-Tec multi-hole seal

Applications:
- Suitable for profiles: Normal, UFW
- Machine- and apparatus engineering
- Ship- and trainbuilding
- Vehicle industries
- Switch cabinets

2.2

Vanjski navoj External Thread	odgovara za rebrastu cijev NW Suitable for corrugated tube	za kabel promjera mm Clamping range mm	SW 1 mm SW 1 mm	SW 2 mm SW 2 mm	E mm E mm	A mm A mm	J mm J mm	Broj artikla crna Art. no. black	JP komad PU pcs.
PG /PG									
PG 9	10	2,5- 8,0	17,0	19,0	8,0	47,0	24,5	3805601	25
PG 11	12+13	3,5-10,0	20,0	22,0	8,0	53,0	29,0	3805602	25
PG 13,5	12+13	5,0-12,0	20,0	24,0	9,0	53,0	29,0	3805603	25
PG 13,5	17	5,0-12,0	27,0	24,0	9,0	58,5	38,5	3805604	25
PG 16	17	7,0-14,0	27,0	27,0	10,0	58,5	38,5	3805605	25
PG 21	22	9,0-18,0	32,0	33,0	11,0	68,5	45,5	3805606	25
PG 21	23	9,0-18,0	34,0	33,0	11,0	68,5	48,5	3805607	25
PG 29	29	14,0-25,0	41,0	42,0	11,0	75,0	55,5	3805608	10
metrički /metric									
M 16x1,5/9	10	2,5- 8,0	17,0	19,0	10,0	47,0	24,5	3805621	25
M 16x1,5/11	12+13	3,5-10,0	20,0	22,0	10,0	53,0	29,0	3805622	25
M 20x1,5/13	12+13	5,0-12,0	20,0	24,0	10,0	53,0	29,0	3805623	25
M 20x1,5/13	17	5,0-12,0	27,0	24,0	10,0	58,5	38,5	3805624	25
M 20x1,5/16	17	7,0-14,0	27,0	27,0	10,0	58,5	38,5	3805625	25
M 25x1,5/16	17	7,0-14,0	27,0	27,0	10,0	58,5	38,5	3805626	25
M 25x1,5/21	22	9,0-18,0	32,0	33,0	10,0	68,5	45,5	3805627	25
M 25x1,5/21	23	9,0-18,0	34,0	33,0	10,0	68,5	48,5	3805628	25
M 32x1,5	29	14,0-25,0	41,0	42,0	10,0	75,0	55,5	3805629	10

Montaža /Assembly

IP 68**
Kako biste postigli nivo zaštite IP 68, umetnite O-brtvu u prvi utor do reza rebraste cijevi sa montažne strane cijevi. Za standardni profil NW50 umetnite dvije O-brtve u prvi i drugi utor cijevi.

To achieve the protection class IP 68, slip the O ring into the first groove of the cut end of the corrugated tube section on the screw side. For normal profiled size NW 50 slip two O ring sealings into the first and second groove of the tube.

Prerežite cijev po vrhu rebra (optimalna zaštita cijevi i konektora).
Separate the tube at a corrugation crest (optimal protection of the tube and connector)

Laganim uvijanjem umetnite cijev u zatvorenu uvodnicu dok ne dođe do kraja.
Insert the tube in the closed gland with a slight twist until the collar stop

Polagano povucite rebrastu cijev unatrag, čime učvršćujete cijev unutar uvodnice.
Slightly pull back the tube in the gland (to latch securely)

O-brtva
za SEM-FAST
cijevnu uvodnicu

O-ring Sealing
for SEM-FAST
Conduit gland

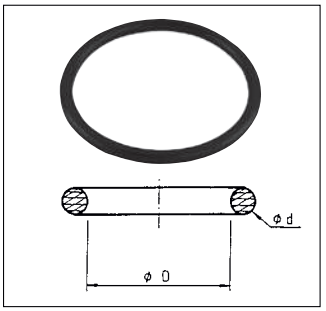

RoHS

Materijal:
NBR 70

Radna temperatura:
-30°C do 120°C

Boje/izvedbe/pakiranja:
- crna

Svojstva:
- tvrdoća: 70°±5°
- O-brtve uvećavaju klasu zaštite za SEM-FAST cijevne uvodnice.
- za standardni profil NW50 umetnite dvije O-brtve u prvi i drugi utor cijevi

Upotreba:
- ove O-brtve koriste se za pouzdano brtvljenje od ulja, prašine i vode

Material:
NBR 70

Temperature range:
-30°C to 120°C

Colour(s)/Designs:
- Black

Characteristics:
- Shore hardness: 70°±5°
- O rings increase the protection class for the SEM-FAST tube glands
- slip two O-ring sealings for size NW 50 into the first and second groove of the tube

Applications:
- These O-rings are used for reliable sealing against oil, dust and water.

2.2

odgovara za profil Suitable for Profile	NW NW	Ø-D mm Ø-D mm	Ø-d mm Ø-d mm	Broj artikla crna Art. no. black	JP kom. PU pcs.
standardni PA6	7,5	5,0	1,50	8112800	50
standardni PA6	8,5	7,0	1,20	8112801	50
standardni PA6	10	7,0	1,50	8112802	50
standardni PA6	12	9,0	1,50	8112804	50
standardni PA6	13	8,0	1,60	8112803	50
standardni PA6	17	14,0	1,78	8112807	50
standardni PA6	22	14,0	2,00	8112808	25
standardni PA6	23	18,0	2,00	8112809	25
standardni PA6	29	20,0	2,50	8112810	20
standardni PA6	37	24,0	2,50	8112811	10
standardni PA6	50*	28,0	2,50	8112813	5
UFW PA6	7,5	7,0	1,5	8112802	50
UFW PA6	8,5	8,1	1,6	8112803	50
UFW PA6	10 + 13	9,1	1,6	8112805	50
UFW PA6	17	13,0	2,5	8112806	50
UFW PA6	22 + 23	20,0	2,5	8112810	20
UFW PA6	29	24,0	3,0	8112812	20
UFW PA6	37	30,0	3,0	8112814	10

Montaža O-brtve / O-ring Assembly

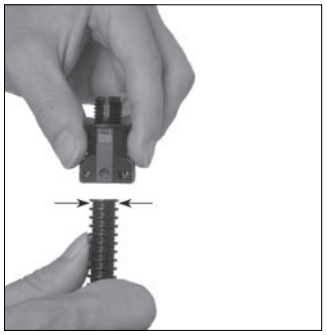

Kako biste postigli nivo zaštite IP 68, umetnite O-brtvu u prvi utor do reza rebraste cijevi sa montažne strane. Za standardni profil NW50 umetnite dvije O-brtve u prvi i drugi utor cijevi.

To achieve the protection class IP 68, slip the O ring into the first groove of the cut end of the corrugated tube section on the screw side. For normal profile size NW 50 slip two O-ring sealings into the first and second groove of the tube.

Pričvrsnice
za Schlemmer-Gigant

Fixings
for Schlemmer-Gigant

Spojnica / Sleeve — Pričvrsnica ravna / Fixing straight — Pričvrsnica 90° / Fixing 90°

IP 54 | RoHS

Materijal:
poliamid 6
O-brtva: tvrdoća NBR 70° A±5

Radna temperatura:
PA6: -30°C do 120°C

Boje/izvedbe/pakiranja:
- crna, siva

Svojstva:
- pričvrsnice: prirubnica sa brtvenim prorezom i 4 otvora Ø 6,5 mm za pričvršćivanje vijcima
- 2 polukružna elementa za prihvat rebrastih cijevi
- 1 prsten za pričvršćivanje
- sa brtvom sa strane kućišta (O-brtva)

Upotreba:
- izrada strojeva i aparata

Material:
Polyamide 6
O-Ring: NBR 70°shore A±5

Temperature range:
PA6: -30°C to 120°C

Colour(s)/Designs:
- Black, grey

Characteristics:
- Fixings: Flange with sealing slot and 4 fixing holes Ø 6,5 mm
- 2 half-shelves for take up the corrugated tube
- 1 fixing ring
- with sealing on housing side (O-ring)

Applications:
- machines and devices

2.2

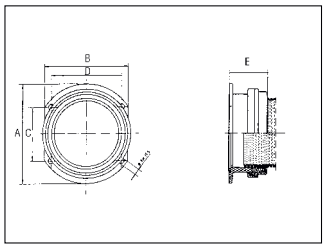

NW NW	A mm A mm	B mm B mm	C mm C mm	D mm D mm	E mm E mm	F mm F mm	Broj artikla crna Art. no. black	Broj artikla siva Art. no. grey	JP kom. PU pcs.
Pričvrsnica ravna / Fixing straight									
70	112,0	95,0	60,0	80,0	42,5	-	3206005	3206000	na upit
95	145,0	126,0	74,0	108,0	51,0	-	3206007	3206002	on request

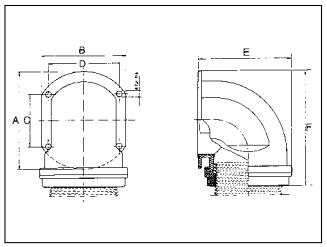

Pričvrsnica pod kutem 90° / Fixing 90° angle									
70	112,0	95,0	60,0	80,0	107,0	134,0	3206004	3206001	na upit
95	145,0	126,0	74,0	108,0	143,0	173,0	3206006	3206003	on request

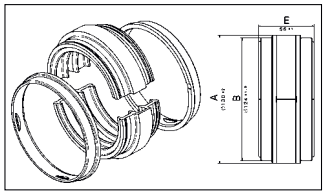

Spojnica / Sleeve									
70	99,5	93,0	-	-	45,0	-	3206058	-	na upit
95	130,0	124,0	-	-	56,0	-	3206052	-	on request

Obujmice + kombinirane čeljusti / Gripping Clamps + Combi Jaw									
							na upit on request	na upit on request	na upit on request
70	plastični mehanizam za zatvaranje						8221570	-	10
70	metalni mehanizam za zatvaranje						8221571	-	10
95	plastični mehanizam za zatvaranje						8221572	-	10
95	metalni mehanizam za zatvaranje						8221573	-	10

Montaža Gigant spojnice / Assembly of Gigant Sleeve

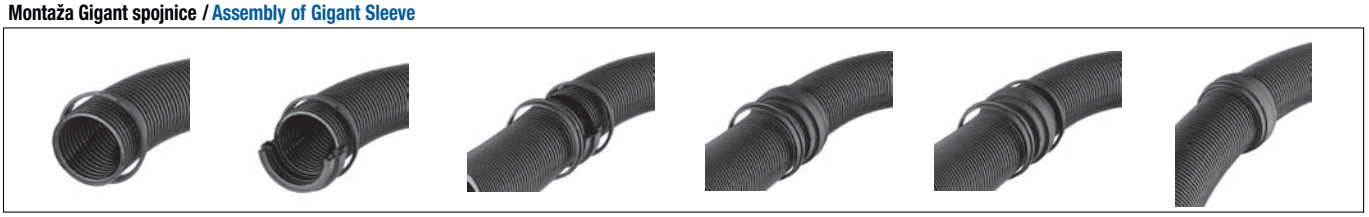

Cijev zaštitna Rakkordflex SF

Protection tube Rakkordflex SF

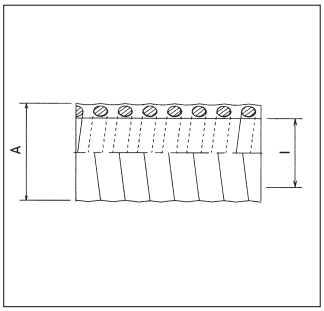

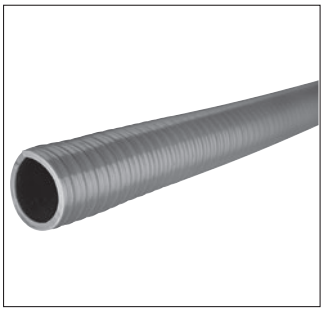

RoHS | IP 68 | EN 60529

Materijal:
Stijenke: PVC
Spirala: tvrdi PVC

Radna temperatura:
-20°C do 70°C
kratkotrajno: 80°C

Boje/izvedbe/pakiranja:
- siva

Svojstva:
- glatka iznutra i izvana
- integrirana tvrda PVC spirala
- bez silikona i kadmija
- nepropusna za plin i tekućine
- lako čišćenje vanjske površine
- vrlo savitljiva
- dobra otpornost na lužine i kiseline

Pribor:
- odgovarajuće uvodnice: NH i SF

Upotreba:
- primjenjiva u proizvodnji strojeva i uređaja
- kao usisno i tlačno crijevo za plinovite i tekuće medije

Material:
Wall: PVC
Spiral: Hart-PVC

Temperature range:
-20°C to 70°C
short-term: 80°C

Colour(s)/Designs:
- Grey

Characteristics:
- smooth interior and exterior
- integrated hard PVC spiral
- no silicone or cadmium
- gas and liquid tight
- easy cleaning of exterior surface
- very flexible
- good resistance to alkalis and acids

Accessories:
- Suitable gland: NH or SF

Applications:
- applicable in engineering and tooling machines
- as suction and pressure hose for gaseous and liquid media

2.2

NW NW	I-Ø mm I-Ø mm	A-Ø mm A-Ø mm	Polumjer savijanja mm Bending radius mm	Broj artikla siva Art. no. grey	JP kolut Ring m
10	10,0	14,0	56,0	1100010	50
13	13,0	17,0	68,0	1100013	50
14	15,0	19,0	76,0	1100014	50
16	16,0	21,0	84,0	1100016	50
22	22,0	27,0	108,0	1100022	50
30	30,0	36,0	144,0	1100030	25
38	38,0	45,0	180,0	1100038	25
45	45,0	52,0	208,0	1100045	25
50	49,0	56,0	224,0	1100050	25

SF uvodnica za Rakkordflex SF

SF gland for Rakkordflex SF

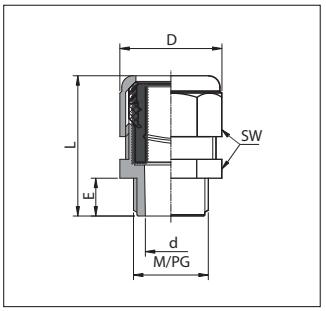

RoHS | IP 67 | EN 60423

Materijal:
mesing niklani
unutarnja brtva:TPE
unutarnji prsten:
brtva plosnata: neopren

Radna temperatura:
-20°C do 110°C

Izvedbe:
- vanjski navoj: metrički

Svojstva:
- visok stupanj zaštite od prašine i tekućina
- sastoji se od više dijelova
- otpornost na vibracije i istezanje
- laka montaža
- vrlo robustna

Upotreba:
- odgovarajuća zaštita za cijevi Rakkordflex SF

Material:
nickel-plated brass
inner seal: TPE
inner socket:
flat seal: neoprene

Temperature range:
-20°C to 110°C

Designs:
- external thread: metric

Characteristics:
- high degree of protection against dust liquids
- multi-piece
- vibration and tension resistant
- easy assembly
- very robust

Applications:
- suitable protection conduit Raccordflex SF

2.2

Vanjski navoj External thread	NW NW	odgovara za Ø-l x A mm Fits for Ø-l x A mm	E mm E mm	SW mm SW mm	Ø-d mm Ø-d mm	broj artikla niklani Art. no. nickel-plated	JP kom. PU pcs.
M 12 x 1,5	10	10 x 14	10,0	22,0	8,3	2512112	50
M 16 x 1,5	13	13 x 17	10,0	25,0	12,2	2512116	50
M 20 x 1,5	14	15 x 19	10,0	27,0	15,0	2512120	50
M 20 x 1,5	16	16 x 21	11,0	29,0	16,0	2512121	50
M 25 x 1,5	22	22 x 27	11,0	36,0	20,8	2512125	25
M 32 x 1,5	30	30 x 36	12,0	46,0	27,5	2512132	25
M 40 x 1,5	38	38 x 45	12,5	55,0	35,5	2512140	25
M 50 x 1,5	45	45 x 52	13,0	63,0	44,0	2512150	10
M 50 x 1,5	50	49 x 56	14,0	67,0	45,5	2512156	10

Uvodnica cijevna NH

PG

Conduit gland NH

PG

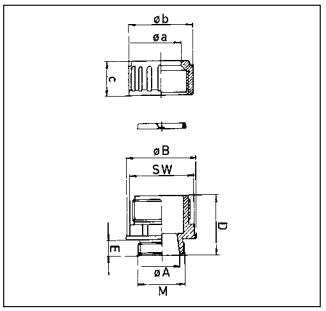

RoHS | IP 54 | UL za / UL for: PG 29, 36, 48

Materijal:
poliamid 6
stezni prsten: polioksimetilen

Radna temperatura:
-40°C do 120°C

Boje/izvedbe/pakiranja:
- siva
- PG navoj
- navoj u inčima na upit

Isporuka:
- Isporučuje se sa montiranim steznim prstenom
- O-brtva se naručuje posebno

Svojstva:
- jednostavna montaža i zaštita od rastezanja
- nelomljiva
- odgovara za sve glatke i rebraste cijevi

Sa O-brtvom:
- u skladu sa ADR/GGVS
- IP 54

Material:
Polyamide 6
Clamping ring: Polyoxymethylene

Temperature range:
-40°C to 120°C

Colour(s)/Designs:
- Grey
- PG thread
- Inch thread on request

Scope of delivery:
- Delivery includes assembled clamping ring
- O-Ring sealings must be ordered separately

Characteristics:
- Easy and tension-proof mounting
- Unbreakable
- fits for all smooth and corrugated tubes

With O-Ring Sealing:
- acc. to ADR/GGVS
- IP 54

2.2

Navoj Thread	tip Type	odgovara za max. a-Ø mm suitable for max. a-Ø mm	E mm E mm	SW mm SW mm	Broj artikla siva Art. no. grey	JP kom. PU pcs.
PG 9	NH 9-15/10	10,0	8,0	22,0	3005100	100
PG 9	NH 9-15/13	13,0	8,0	19,0	3000109	100
PG 9	NH 9-15/14	14,0	8,0	22,0	3000117	100
PG 9	NH 9-15/15	15,0	8,0	22,0	3000125	100
PG 11	NH 11-18/10	10,0	8,0	22,0	3005119	100
PG 11	NH 11-18/13	13,0	8,0	22,0	3005208	100
PG 11	NH 11-18/14	14,0	8,0	22,0	3005305	100
PG 11	NH 11-18/16	16,0	8,0	22,0	3000206	100
PG 11	NH 11-18/19	19,0	8,0	22,0	3005313	100
PG 11	NH 11-18/21	21,0	8,0	27,0	3005402	100
PG 13,5	NH 13,5-19/10	10,0	8,0	22,0	3005410	50
PG 13,5	NH 13,5-19/13	13,0	8,0	22,0	3005429	50
PG 13,5	NH 13,5-19/14	14,0	8,0	22,0	3005437	50
PG 13,5	NH 13,5-19/16	16,0	8,0	22,0	3005445	50
PG 13,5	NH 13,5-19/19	19,0	8,0	24,0	3000303	50
PG 13,5	NH 13,5-19/21	21,0	8,0	27,0	3000311	50
PG 16	NH 16-22/10	10,0	8,0	22,0	3005500	50
PG 16	NH 16-22/13	13,0	8,0	22,0	3005518	50
PG 16	NH 16-22/14	14,0	8,0	22,0	3005607	50
PG 16	NH 16-22/16	16,0	8,0	22,0	3005615	50
PG 16	NH 16-22/19	19,0	8,0	22,0	3005623	50
PG 16	NH 16-22/21	21,0	12,0	27,0	3000401	50
PG 16	NH 16-22/24	24,0	8,0	35,0	3000419	50
PG 21	NH 21-28/26	26,0	14,0	36,0	3000524	25
PG 21	NH 21-28/28	28,0	10,0	36,0	3000508	25
PG 21	NH 21-28/32	32,0	10,0	46,0	3000516	25
PG 29 UL	NH 29-37/34	34,0	10,0	45,0	3000605	25
PG 29 UL	NH 29-37/37	37,0	10,0	50,0	3000613	25
PG 29 UL	NH 29-37/42	42,0	12,0	55,0	3000621	25
PG 29 UL	NH 29-37/44	44,0	12,0	55,0	3005704	50
PG 36 UL	NH 36-47/45	44,0	12,0	55,0	3000702	25
PG 36 UL	NH 36-47/53	54,0	12,0	65,0	na upit / on request	na upit / on request
PG 48 UL	NH 48-59/56	56,0	11,5	65,0	3000800	25

Uvodnica cijevna NH

metrička

Conduit gland NH

Metric

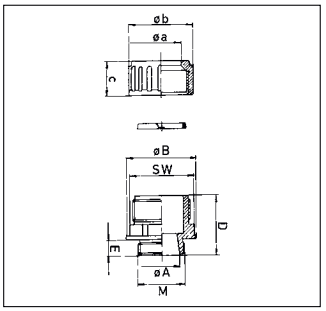

RoHS | IP 54

Materijal:
poliamid 6
stezni prsten: polioksimetilen

Radna temperatura:
-40°C do 120°C

Boje/izvedbe/pakiranja:
- siva
- metrički navoj
- navoj u inčima na upit

Isporuka:
- Isporučuje se sa montiranim steznim prstenom
- Ø-brtva se naručuje posebno

Svojstva:
- jednostavna montaža i zaštita od rastezanja
- nelomljiva
- *) tijelo uvodnice A 10 mm
- odgovara za sve glatke i rebraste cijevi

Sa Ø-brtvom:
- u skladu sa ADR/GGVS
- IP 54

Material:
Polyamide 6
Clamping ring: Polyoxymethylene

Temperature range:
-40°C to 120°C

Colour(s)/Designs:
- Grey
- Metric thread
- inch thread on request

Scope of delivery:
- Delivery includes assembled clamping ring
- Ø-Ring sealings must be ordered separately

Characteristics:
- easy and tension-proof mounting
- unbreakable
- *) Screw-in-socket A 10 mm
- fits for all smooth and corrugated tubes

With Ø-Ring Sealing:
- acc. to ADR/GGVS
- IP 54

2.2

navoj Thread	tip Type	odgovara za max. a-Ø mm suitable for max. a-Ø mm	E mm E mm	SW mm SW mm	Broj artikla siva Art. no. grey	JP kom. PU pcs.
M 16 x 1,5	NH M16-16/10	11,5	8,0	22,0	3003160	50
M 16 x 1,5	NH M16-16/10*)	11,5	8,0	22,0	na upit/on request	na upit/on request
M 16 x 1,5	NH M16-16/12	12,0	8,0	22,0	3003162	50
M 16 x 1,5	NH M16-16/13	13,0	8,0	22,0	3003163	50
M 16 x 1,5	NH M16-16/14	15,0	8,0	22,0	3003164	50
M 16 x 1,5	NH M16-16/16	17,0	8,0	22,0	3003167	50
M 16 x 1,5	NH M16-16/19	19,0	8,0	23,0	3003165	50
M 20 x 1,5	NH M20-20/10	11,5	11,0	22,0	3003210	50
M 20 x 1,5	NH M20-20/13	13,5	8,0	22,0	3003211	50
M 20 x 1,5	NH M20-20/14	15,0	8,0	22,0	3003212	50
M 20 x 1,5	NH M20-20/16	17,0	8,0	22,0	3003214	50
M 20 x 1,5	NH M20-20/21	21,3	8,0	27,0	3003213	50
M 20 x 1,5	NH M20-20/24	25,0	8,0	35,0	3003224	50
M 25 x 1,5	NH M25-25/24	25,0	13,0	35,0	3003281	25
M 25 x 1,5	NH M25-25/28	28,4	10,2	41,0	3003280	25
M 25 x 1,5	NH M25-25/32	32,0	10,0	46,0	3003282	25
M 25 x 1,5	NH M25-25/34	34,8	10,0	46,0	3003283	25
M 25 x 1,5	NH M25-25/30	30,5	10,0	46,0	3003284	25
M 25 x 1,5	NH M25-25/28	28,5	14,0	40,0	3003285	25
M 32 x 1,5	NH M32-32/30	30,5	10,0	46,0	3003320	20
M 32 x 1,5	NH M32-32/32	32,0	10,0	46,0	3003321	20
M 32 x 1,5	NH M32-32/34	34,8	10,0	46,0	3003322	20
M 32 x 1,5	NH M32-32/34	34,8	14,0	46,0	3003323	20
M 32 x 1,5	NH M32-32/37	36,8	10,0	50,0	3003324	20
M 40 x 1,5	NH M40-40/45	44,0	12,0	55,0	3003400	10
M 50 x 1,5	NH M50-50/56	56,5	12,0	65,0	3003500	5

Uvodnica cijevna NH kutna 90°

Conduit gland NH 90°-angle

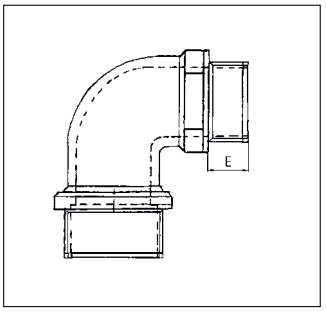

RoHS | IP 54

Materijal:
poliamid 6
stezni prsten: polioksimetilen

Radna temperatura:
-40°C do 120°C

Boje/izvedbe/pakiranja:
- siva
- PG/metrički navoj

Isporuka:
- Isporučuje se sa montiranim steznim prstenom
- O-brtva se naručuje posebno

Svojstva:
- jednostavna montaža i zaštita od rastezanja
- nelomljiva
- unutarnji kutni dio je gladak pa stoga ne oštećuje vodiče
- odgovara za sve glatke i rebraste cijevi

Sa O-brtvom:
- u skladu sa ADR/GGVS
- IP 54

Material:
Polyamide 6
Clamping ring: Polyoxymethylene

Temperature range:
-40°C to 120°C

Colour(s)/Designs:
- Grey
- PG/metric thread

Scope of delivery:
- Delivery includes assembled clamping ring
- O-Ring sealings must be ordered separately

Characteristics:
- easy and tight mounting
- unbreakable
- interior part of angle is smooth therefore no damaging of cables
- fits for all smooth and corrugated tubes

With O-Ring Sealing:
- acc. to ADR/GGVS
- IP 54

2.2

navoj Thread	tip Type	odgovara za max. A-Ø mm suitable for max. A-Ø mm	E mm E mm	SW mm SW mm	Broj artikla siva Art. no. grey	JP kom. PU pcs.
PG /PG						
PG 9	NH 9-15/10W	10,0	10,0	18,0	7304001	100
PG 9	NH 9-15/13W	13,0	10,0	18,0	7304002	100
PG 9	NH 9-15/14W	14,0	10,0	18,0	7304003	100
PG 9	NH 9-15/16W	16,0	10,0	18,0	7304004	100
PG 11	NH 11-18/10W	10,0	10,0	21,0	na upit / on request	na upit / on request
PG 11	NH 11-18/13W	13,0	10,0	21,0	7304006	100
PG 11	NH 11-18/14W	14,0	10,0	21,0	na upit / on request	na upit / on request
PG 11	NH 11-18/16W	16,0	10,0	21,0	7304008	100
PG 11	NH 11-18/19W	19,0	10,0	21,0	na upit / on request	na upit / on request
PG 13,5	NH 13-19/19W	20,0	12,0	23,0	7304011	50
PG 16	NH 16-22/19W	19,0	12,0	25,0	7304015	50
PG 16	NH 16-22/21W	21,0	12,0	25,0	7304016	50
PG 16	NH 16-22/24W	24,0	12,0	25,0	7304017	50
PG 21	NH 21-28/28W	28,0	14,0	34,0	7304021	50
PG 21	NH 21-28/30W	30,0	14,0	34,0	na upit / on request	na upit / on request
metrički /metric						
M 16	NH M16-16/10	11,5	10,0	21,0	7304116	25
M 16	NH M16-16/13	13,5	10,0	21,0	7304117	25
M 16	NH M16-16/14	14,5	10,0	21,0	7304118	25
M 16	NH M16-16/16	17,0	10,0	21,0	7304119	25
M 20	NH M20-20/19	19,5	12,0	23,0	7304120	25
M 20	NH M20-20/21	22,0	12,0	23,0	7304121	25
M 25	NH M25-25/19	19,5	12,0	27,0	7304125	25
M 25	NH M25-25/21	22,0	12,0	27,0	7304126	25
M 25	NH M25-25/24	24,0	12,0	27,0	7304127	25
M 25	NH M25-25/26	26,2	12,0	27,0	7304128	25
M 32	NH M32-32/28	28,5	14,0	34,0	7304132	10
M 32	NH M32-32/30	30,5	14,0	34,0	7304133	10
M 32	NH M32-32/32	32,5	14,0	34,0	7304134	10
M 32	NH M32-32/34	34,5	14,0	34,0	7304135	1

Pribor za NH cijevne uvodnice

Accessories for NH-Tube Glands

Stezni prsten za brtvljenje

Clamp-sealing ring

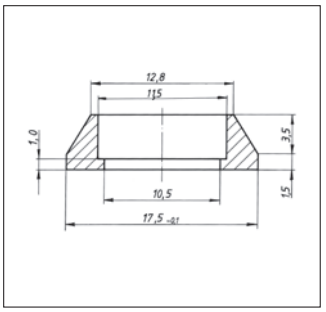

Stezni prsten za brtvljenje
Clamp sealing ring

2.2

RoHS

Materijal:
Neopren

Radna temperatura:
-40°C do 120°C

Boje/izvedbe/pakiranja:
• crna

Napomena:
• ne odgovara u kombinaciji sa opcionalnim/dodatnim pričvrsnim prstenom

Material:
Neoprene

Temperature range:
-40°C to 120°C

Colour(s)/Designs:
• Black

Note:
• Not suitable in combination with optional/additional lock ring

NW za standardni profil NW for Normalprofile	tip Type	A mm A mm	B mm B mm	C mm C mm	Broj artikla Art. no.	JP kom. PU pcs.
8,5	NH X - X/10	11,5	17,5	5,0	8117080	1000
10	NH X - X/13	12,8	17,0	6,4	8117101	1000
13	NH X - X/16	15,8	20,0	5,4	8117136	1000
17	NH X - X/21	20,5	24,5	6,6	8117179	1000
22	NH X - X/26	25,2	33,0	7,0	8117225	500
23	NH X - X/28	28,1	33,0	7,0	8117233	500
29	NH X - X/34	34,3	39,0	7,5	8117292	500

Stezni prsten

Clamping ring

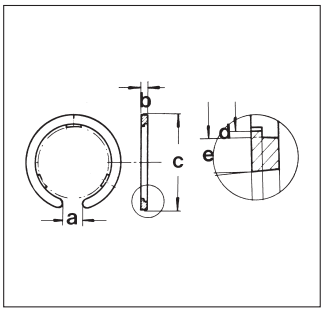

stezni prsten
Clamping ring

RoHS

Materijal:
acetal/POM (polioksimetilen)

Boje/izvedbe/pakiranja:
• crna

Material:
Acetal/POM (Polyoxymethylene)

Colour(s)/Designs:
• Black

NW NW	tip Type	a mm a mm	b mm b mm	c mm c mm	d mm d mm	e mm e mm	Broj artikla Art. no.	JP kom. PU pcs.
10	NH 9-15/13	6,0	2,0	17,5	12,5	13,5	9800662	5000
13	NH 11-18/16	5,5	2,5	21,0	16,0	17,0	9800964	5000
17	NH 16-22/21	6,5	2,0	24,8	19,5	20,5	9800530	5000
22	NH 21-28/26	8,0	2,5	33,0	25,0	27,0	9800913	5000
29	NH 29-37/34	10,0	2,5	39,0	32,0	33,0	9801154	5000

Nosač uvodnica univerzalni tip UVH

Universal Gland-Holder Type UVH

RoHS

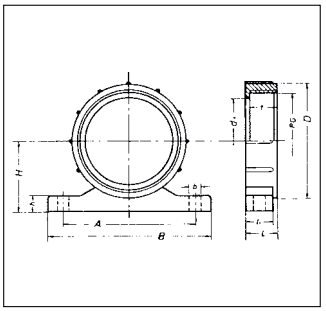

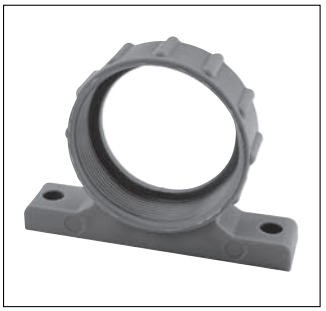

Isporučeni proizvod se može razlikovati od prikazanog.
Delivered article can differ from drawing.

Materijal:
Polypropylen

Radna temperatura:
-40°C do 100°C

Boje/izvedbe/pakiranja:
- siva
- PG/metrički navoj

Svojstva:
- otpornost na udarce
- nosač sa navojem za kabelske i cijevne uvodnice

Upotreba:
- strojevi i sklopovi

Material:
Polypropylene

Temperature range:
-40°C to 100°C

Colour(s)/Designs:
- Grey
- PG/metric thread

Characteristics:
- impact resistance
- screwed holder for cable glands or conduit glands

Applications:
- Machines and devices

2.2

za navoj for thread	tip Type	b mm b mm	A mm A mm	B mm B mm	D mm D mm	H mm H mm	L mm L mm	Broj artikla siva Art. no. grey	JP kom. PU pcs.
PG / PG									
PG 9	UVH- 9	5,7	29,0	40,0	19,0	14,5	14,0	3201090	50
PG 11	UVH-11	5,7	37,0	50,0	27,0	20,0	14,0	3201112	50
PG 13,5	UVH-13,5	5,7	37,0	50,0	27,0	20,0	14,0	3201139	50
PG 16	UVH-16	5,7	37,0	50,0	27,0	20,0	14,0	3201163	50
PG 21	UVH-21	5,7	43,0	57,0	32,0	25,0	14,0	3201210	50
PG 29	UVH-29	6,7	53,0	67,0	41,0	27,5	16,5	3201295	25
PG 36	UVH-36	6,7	65,0	80,0	52,0	33,0	16,5	3201368	25
PG 42	UVH-42	6,7	69,0	86,0	59,0	36,5	18,5	na upit / on request	na upit / on request
PG 48	UVH-48	6,7	76,0	93,0	65,0	38,5	19,0	3201481	25
metrički / metric									
M 20 x 1,5	UVH-M 20	5,7	37,0	50,0	27,0	20,0	14,0	3201072	50
M 25 x 1,5	UVH-M 25	5,7	43,0	57,0	32,0	25,0	14,0	3201073	50
M 32 x 1,5	UVH-M 32	6,7	53,0	67,0	41,0	27,5	16,5	3201074	50
M 40 x 1,5	UVH-M 40	6,7	65,0	80,0	52,0	33,0	16,5	3201075	50
M 50 x 1,5	UVH-M 50	6,7	69,0	86,0	59,0	36,5	18,5	3201076	50

Žičana pletenica tip HG

Wire braiding Type HG

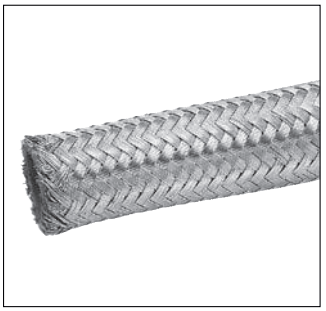

RoHS | IP 50

Materijal:
čelična pocinčana žica
promjer: 0,24 mm

Oblici:
- ostali na upit

Svojstva:
- pletenica se sastoji od zaobljenih pletenih žica sa dvostrukim preklapanjem pod različitim kutevima.
- pletenica se može aksijalno skupljati ca. 20-30 %
- rastezanjem postaje čvršća

Upotreba:
- snažna i fleksibilna zaštita za vodiče, cijevi i šuplje komade
- zaštita od utjecaja elektromagnetskih valova

Material:
galvanized steel wire
Diameter: 0,24 mm

Designs:
- others on request

Characteristics:
- Braiding consisting of round braided wires with double crossing at various braiding angles.
- braiding can be contracted axially approx. 20-30 %
- becomes tight by stretching

Applications:
- Strong, flexible protection for cables, tubes and hollow pieces
- Anti-interference tube, filter for traction relief

2.2

LW mm LW mm	Broj artikla Art. no.	JP kolut m PU ring m
5,0 - 6,0	0803065	50
7,0 - 8,0	0803081	50
9,0 - 10,0	0803103	50
11,0 - 14,0	0803146	25
15,0 - 18,0	0803189	25
19,0 - 22,0	0803227	25
23,0 - 27,0	0803278	25
28,0 - 32,0	0803324	25
33,0 - 36,0	0803367	25
37,0 - 40,0	0803405	25

Cijev izolirajuća bez vlakana

Non-fibrous insulating tubes

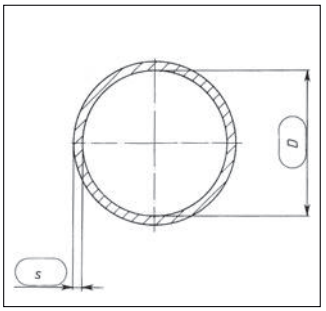

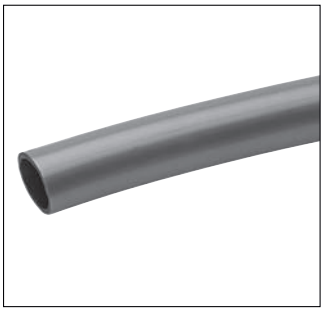

RoHS | IP 65

Materijal:
PVC

Radna temperatura:
-25°C do 70°C

Boje/izvedbe/pakiranja:
- crna, ostale na upit

Napomena:
izolirajuće cijevi promjera (D): 2,0 x 0,4 mm do 28,0 x 1,2 mm isporučuju se napunjene zrakom i zavarene.

Svojstva:
- vlačna čvrstoća ca. 250 kg/cm²
- prijelomna elongacija 180 %
- specifični električni otpor 10^{12} Ohm x cm
- dielektrična čvrstoća 30 kV/mm
- dielektrična konstanta pri:
  50 Hz 4,0
  800 Hz 3,4
  1 GHz 3,4
- dielektrični faktor gubitka pri:
  800 Hz 0,020
  1 GHz 0,015

Upotreba:
- izolacija električnih vodiča

Material:
PVC

Temperature range:
-25°C to 70°C

Colour(s)/Designs:
- Black, others on request

Note:
Insulating tubes of diameter (D): 2.0 x 0.4 mm to 28.0 x 1.2 mm are delivered filled with air and sealed by welding.

Characteristics:
- Tensile strength approx. 250 kg/cm²
- Breaking elongation 180 %
- specific electrical resistance 10^{12} Ohm x cm
- Dielectric strength 30 kV/mm
- Dielectric constant:
  50 Hz 4,0
  800 Hz 3,4
  1 GHz 3,4
- Dielectric loss factor:
  800 Hz 0,020
  1 GHz 0,015

Applications:
- For insulating electrical leads

2.2

D mm D mm	S mm S mm	Broj artikla crna Art. no. black	JP kolut m JP Coil m
3,0	0,4	1902600	700
3,5	0,4	1902601	600
4,0	0,5	1902602	500
4,5	0,5	1902603	400
5,0	0,6	1902604	500
6,0	0,6	1902605	400
7,0	0,7	1902606	500
8,0	0,7	1902607	500
9,0	0,7	1902608	400
10,0	0,7	1902609	300
11,0	0,7	1902610	250
12,0	0,8	1902611	250
13,0	0,8	1902612	200
14,0	1,0	1902618	200
15,0	0,8	1902613	150
16,0	1,0	1902614	150
18,0	1,0	1902615	100
19,0	1,0	1902619	100
20,0	1,2	1902616	100
22,0	1,2	1902622	75
25,0	1,2	1902617	50
28,0	1,2	1902628	50
30,0	1,2	1902630	50

Cijev zaštitna Rakkord-DU (Vinnylan-DU)

Protection tube Rakkord-DU (Vinnylan-DU)

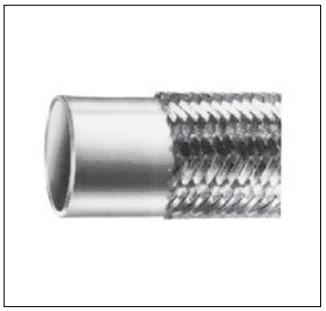

RoHS | IP 65

Materijal:
cijev: PVC
plašt:
pocinčana željezna žica

Radna temperatura:
-30°C do 80°C
kratkotrajno: 120°C

Svojstva:
- otpornost na ulja i kiseline
- dielektrična čvrstoća: 250 KV (cm)

Pribor:
- odgovarajuće uvodnice: Serija 75

Material:
Tube: PVC
Braiding:
galvanized iron wire

Temperature range:
-30°C to 80°C
short-term: 120°C

Characteristics:
- resistant to oil and acid
- Dielectric strength: 250 KV (cm)

Accessories:
- Suitable glands: Serie 75

2.2

odgovarajuće uvodnice suitable gland	I-Ø mm I-Ø mm	A-Ø mm A-Ø mm	Broj artikla Art. no.	JP m PU m
750711/7; 750711/M 12	7,0	11,0	1002015	na upit / on request
750913/9; 750913/M 16	9,0	13,0	1002023	50
751115/11; 751115/M 16	11,0	15,0	1002031	50
751317/13; 751317/M 20	13,0	17,0	1002040	50
751621/16; 751621/M 20	16,0	21,0	1002058	50
752126/21; 752126/M 25	21,0	26,0	1002066	na upit / on request
752833/29; 752833/M 32	28,0	33,0	1002074	na upit / on request
753540/36; 753540/M 40	35,0	40,0	1002082	na upit / on request
754248/42; 754248/M 50	42,0	48,0	1002090	na upit / on request
754854/48; 754854/M 63	48,0	54,0	1002104	na upit / on request

Uvodnice specijalne serije 75

Special glands series 75

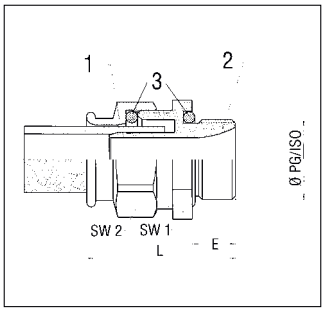

RoHS | IP 67

Materijal:
- 1/2: mesing niklani
- 3: Nitril

Izvedbe:
- PG/metrički navoj

Svojstva:
- siguran, robustan i izdržljiv spoj
- prenošenje uzemljenja

Upotreba:
- za brzu montažu elektro-zaštitnih cijevi tipa Rakkord-DU

Material:
- 1/2: nickel-plated brass
- 3: Nitrile

Designs:
- PG/metric thread

Characteristics:
- secure, robust and durable assembly
- irreproachably grounding

Applications:
- for rapid assembly of electro-protective tubes type Rakkord-DU

2.2

Vanjski navoj External thread	tip Type	odgovara za I-Ø x A-Ø mm suitable for I-Ø x A-Ø mm	SW 1 mm SW 1 mm	SW 2 mm SW 2 mm	E mm E mm	L mm L mm	Broj artikla Art. no.	JP kom. PU pcs.
PG / PG								
PG 7	750711/7	7,0 x 11,0	20,0	20,0	7,0	27,0	2700077	50
PG 9	750913/9	9,0 x 13,0	22,0	22,0	8,0	29,0	2700093	50
PG 11	751115/11	11,0 x 15,0	24,0	24,0	10,0	33,0	2700115	50
PG 13,5	751317/13	13,0 x 17,0	30,0	30,0	10,0	39,0	2700131	20
PG 16	751621/16	16,0 x 21,0	32,0	32,0	12,0	42,0	2700166	50
PG 21	752126/21	21,0 x 26,0	38,0	38,0	12,0	45,0	2700212	25
PG 29	752833/29	28,0 x 33,0	48,0	48,0	12,0	46,0	2700298	20
PG 36	753540/36	35,0 x 40,0	58,0	55,0	12,0	47,0	2700360	1
PG 42	754248/42	42,0 x 48,0	65,0	65,0	14,0	55,0	2700425	1
PG 48	754854/48	48,0 x 54,0	70,0	70,0	14,0	59,0	2700484	1
metrički / metric								
M 12 x 1,5	750711/M 12	7,0 x 11,0	20,0	20,0	7,0	27,0	2700512	50
M 16 x 1,5/9	750913/M 16	9,0 x 13,0	22,0	22,0	8,0	29,0	2700516	50
M 16 x 1,5/11	751115/M 16	11,0 x 15,0	24,0	24,0	8,0	31,0	2700517	50
M 20 x 1,5/13	751317/M 20	13,0 x 17,0	30,0	30,0	10,0	39,0	2700520	50
M 20 x 1,5/16	751621/M 20	16,0 x 21,0	32,0	32,0	10,0	40,0	2700521	50
M 25 x 1,5	752126/M 25	21,0 x 26,0	38,0	38,0	12,0	45,0	2700525	20
M 32 x 1,5	752833/M 32	28,0 x 33,0	48,0	48,0	12,0	46,0	2700532	20
M 40 x 1,5	753540/M 40	35,0 x 40,0	58,0	55,0	12,0	47,0	2700540	20
M 50 x 1,5	754248/M 50	42,0 x 48,0	65,0	65,0	14,0	55,0	2700550	10
M 63 x 1,5	754854/M 63	48,0 x 54,0	70,0	70,0	14,0	59,0	2700563	5

Cijev zaštitna Rakkord (Vinnylan®)

Protection tube Rakkord (Vinnylan®)

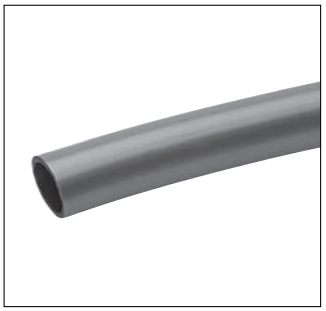

RoHS | IP 65

Materijal:
PVC visoke kvalitete

Radna temperatura:
-25°C do 80°C
kratkotrajno: 100°C

Svojstva:
- otpornost na ulja i kiseline
- dielektrična čvrstoća: 250 kV (cm)

Pribor:
- odgovarajuće uvodnice: KSV

Material:
high quality suspension PVC

Temperature range:
-25°C to 80°C
short-term: 100°C

Characteristics:
- resistant to oil and acid
- Dielectric strength: 250 kV (cm)

Accessories:
- Suitable gland: KSV

2.2

odgovarajuće uvodnice suitable gland	promjer unutarnji mm Inner Diameter mm	promjer vanjski mm External Diameter mm	Broj artikla Art. no.	JP m PU m
KSV 9; KSV M16	13,0	15,0	1000071	50
KSV 11; KSV M20/11	13,5	16,5	1000080	50
KSV 11; KSV M20/11	13,5	17,5	1000098	50
KSV 13; KSV M20/13	16,0	20,0	1000110	50
KSV 13; KSV M20/13	18,0	22,0	1000128	50
KSV 16; KSV M25	18,5	22,5	1000136	50
KSV 21; KSV M32	25,5	31,5	1000160	25
KSV 29; KSV M40	33,5	39,5	1000195	25
KSV 29; KSV M40; KSV 36	36,0	42,0	1000209	25
KSV 42	42,0	48,0	1000225	25
KSV 48	48,0	54,0	1000233	25

Uvodnice specijalne KSV

Special glands KSV

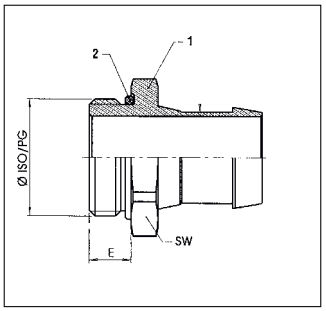

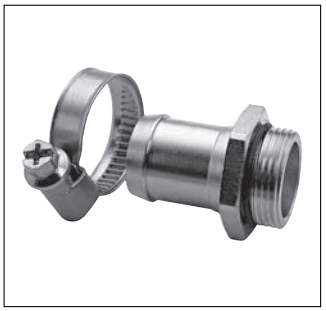

RoHS | IP 65

Materijal:
- 1: mesing niklani
- 2: O-brtva: Nitril

Izvedbe:
- PG/metrički navoj

Svojstva:
- teški tip uvodnice
- uključena obujmica za cijev

Upotreba:
- odgovara za Rakkord (Vinnylan)
- za brzu montažu elektro-zaštitnih cijevi od PVC-a

Material:
- 1: nickel-plated brass
- 2: O-ring: Nitrile

Designs:
- PG/metric thread

Characteristics:
- heavy type
- hose clamp enclosed

Applications:
- Suitable for Rakkord (Vinnylan)
- for rapid assembly of electro-protective tubes made of PVC

2.2

Vanjski navoj External thread	tip Type	odgovara za I-Ø x A-Ø mm suitable for I-Ø x A-Ø mm	E mm E mm	SW mm SW mm	Broj artikla Art. no.	JP kom. PU pcs.
PG / PG						
PG 9	KSV 9	13,0 x 15,0	7,0	19,0	2200090	100
PG 11	KSV 11	16,0 x 20,0	7,0	22,0	2200112	100
PG 13,5	KSV 13	18,0 x 22,0	8,0	24,0	2200139	50
PG 16	KSV 16	18,5 x 22,5	8,0	27,0	2200163	50
PG 21	KSV 21	25,5 x 31,5	8,0	32,0	2200210	25
PG 29	KSV 29	36,0 x 42,0	8,0	41,0	2200295	25
PG 36	KSV 36	36,0 x 42,0	9,0	50,0	2200368	5
PG 42	KSV 42	42,0 x 48,0	10,0	57,0	na upit / on request	na upit / on request
metrički / metric						
M 16 x 1,5	KSV M16	13,0 x 15,0	7,0	19,0	2200516	100
M 20 x 1,5/11*	KSV M20/11	16,0 x 20,0	7,0	24,0	2200520	100
M 20 x 1,5/13*	KSV M20/13	18,0 x 22,0	8,0	24,0	2200521	50
M 25 x 1,5	KSV M25	18,5 x 22,5	8,0	28,0	2200525	50
M 32 x 1,5	KSV M32	25,5 x 31,5	8,0	36,0	2200532	25
M 40 x 1,5	KSV M40	36,0 x 42,0	8,0	44,0	2200540	25

SCHLEMMER-FLEX K-PVC

PVC sa tvrdom PVC spiralom

SCHLEMMER-FLEX K-PVC

PVC with hard PVC spiral

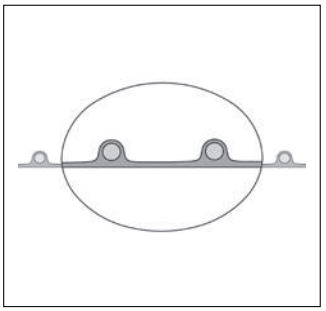

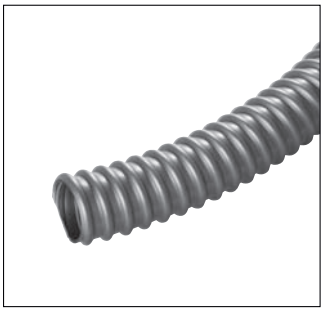

RoHS | IP 68 | EN 60529

Materijal:
stijenka: PVC
spirala: tvrdi PVC

Radna temperatura:
-20°C do 70°C
kratkotrajno: do 80°C

Boje/izvedbe/pakiranja:
- siva

Svojstva:
- tvrda plastična spirala ugrađena u stijenku cijevi
- glatka unutarnja površina cijevi
- savitljiva
- dobra otpornost na lužine i kiseline
- nepropusnost za plin i tekućine
- dobra UV otpornost i otpornost na ozon
- minimalna težina

Pribor:
- odgovarajuće uvodnice: LK i LKH

Upotreba:
- elektroinstalacije, razvodne ploče, razvodni ormari i strojogradnja

Material:
wall: PVC
spiral: hard PVC

Temperature range:
-20°C to 70°C
short-term: to 80°C

Colour(s)/Designs:
- Grey

Characteristics:
- hard plastic spiral integrated in wall
- smooth inner surface
- flexible
- good resistance to alkalis and acids
- gas and liquid-tight
- good resistance to UV and ozone
- minimum weight

Accessories:
- Suitable gland: LK and LKH

Applications:
- for electric installations, installation in switchboard plant, switch cabinets and machine construction

2.2

					10 m kolut / ring			
odgovarajuće uvodnice suitable glands	NW NW	I-Ø mm I-Ø mm	A-Ø mm A-Ø mm	Polumjer savijanja mm ±10% Bending radius mm ±10%	Broj artikla siva Art.no grey	JP m PU m	Broj artikla siva Art.no grey	JP m PU m
PG 7 / M 12	7	7,0	10,0	15	1602600	10	1602063	50
PG 9 / M 16	9	10,0	14,0	21	1602601	10	1602098	50
PG 11 / M 20	11	13,0	17,0	26	1602602	10	1602128	50
PG 13,5 / -	13,5	15,0	19,0	29	1602603	10	1602144	50
PG 16 / M 25	16	16,0	21,0	32	1602604	10	1602152	50
PG 21 / M 32	21	21,0	27,0	41	1602605	10	1602209	50
PG 29 / M 40	29	29,0	36,0	54	1602606	10	1602276	25
PG 36 / M 50	36	38,0	45,0	68	1602607	10	1602357	25
PG 48 / M 63	48	48,0	56,0	84	1602608	10	1602446	25

SCHLEMMER-FLEX KUW-PVC

PVC sa plastificiranom opružnom čeličnom žicom

RoHS | IP 68 | EN 60529

Materijal:
stijenka: visokovrijedni mekani PVC
spirala: plastificirana opružna čelična žica

Radna temperatura:
-20°C do 70°C
kratkotrajno: do 80°C

Boje/izvedbe/pakiranja:
- siva

Svojstva:
- plastificirana opružna čelična žica
- debljina stijenke ca. 0,4 - 0,9 mm ovisno o promjeru
- vrlo savitljiva
- dobra otpornost na lužine i kiseline
- nepropusnost za plin i tekućine
- dobra UV otpornost i otpornost na ozon
- otporna na izvijanje
- mali radijus savijanja

Pribor:
- odgovarajuće uvodnice: LK und LKH

Upotreba:
- elektroinstalacije, razvodne ploče, razvodni ormari, strojogradnja i robotika

SCHLEMMER-FLEX KUW-PVC

PVC with plastic-coated spring steel wire

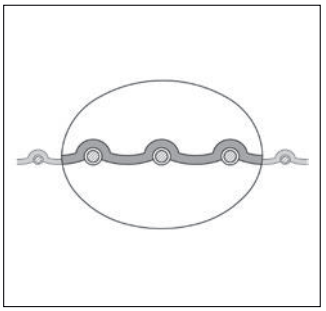

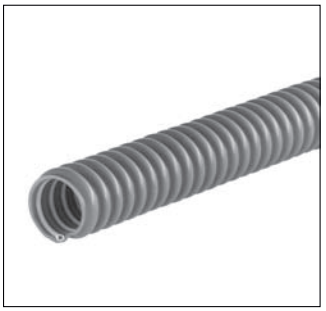

Material:
wall: high grade soft PVC
spiral: plastic coated spring steel wire

Temperature range:
-20°C to 70°C
short-term: to 80°C

Colour(s)/Designs:
- Grey

Characteristics:
- plastic coated spring steel wire
- wall thickness 0.4 - 0.9 mm approx. Depending on diameter
- highly flexible
- good resistance to alkalis and acids
- gas and liquid-tight
- good resistance to UV and ozone
- kink-proof
- small bending radius

Accessories:
- Suitable gland: LK and LKH

Applications:
- for electric installations, installation in switchboard plant, switch cabinets, machine construction and robot technique

2.2

odgovarajuće uvodnice suitable glands	NW NW	I-Ø mm I-Ø mm	A-Ø mm A-Ø mm	Polumjer savijanja mm ±10% Bending radius mm ±10%	10 m kolut / ring Broj artikla siva Art.no grey	JP m PU m	Broj artikla siva Art.no grey	JP m PU m
PG 7 / M 12	7	7,0	10,0	10,0	1601600	10	1601075	50
PG 9 / M 16	9	10,0	14,0	14,0	1601601	10	1601105	50
PG 11 / M 20	11	13,0	17,0	17,0	1601602	10	1601130	50
PG 13,5 / -	13,5	15,0	19,0	19,0	1601603	10	1601156	50
PG 16 / M 25	16	16,0	21,0	21,0	1601604	10	1601172	50
PG 21 / M 32	21	21,0	27,0	27,0	1601605	10	1601229	50
PG 29 / M 40	29	30,0	36,0	36,0	1601606	10	1601296	25
PG 36 / M 50	36	38,0	45,0	45,0	1601607	10	1601385	25
PG 42 / -	42	44,0	52,0	52,0	1601608	10	1601386	25
PG 48 / M 63	48	48,0	56,0	56,0	1601609	10	1601490	25

SCHLEMMER-FLEX KUW-PUR

PUR sa plastificiranom opružnom čeličnom žicom

SCHLEMMER-FLEX KUW-PUR

PUR with plastic-coated spring steel wire

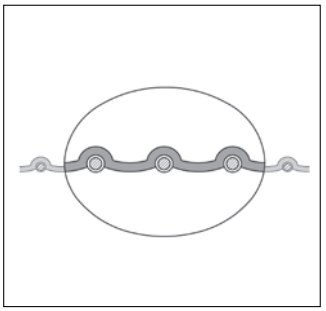

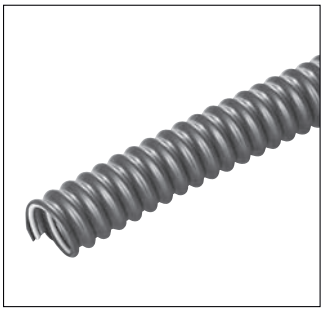

RoHS | IP 68 | EN 60529

2.2

Materijal:
stijenka: specijalni premium eter-poliuretan
spirala: plastificirana opružna čelična žica

Radna temperatura:
-40°C do 90°C
kratkotrajno: do 125°C

Boje/izvedbe/pakiranja:
- metalik plava prema RAL 5007

Svojstva:
- plastificirana opružna čelična žica
- debljina stijenke ca. 0,4 - 0,9 mm ovisno o promjeru
- vrlo savitljiva
- visoka vlačna otpornost i otpornost na kidanje
- nepropusnost za plin i tekućine
- dobra UV otpornost i otpornost na ozon
- otporna na izvijanje
- otporna na grebanje
- mali radijus savijanja

Pribor:
- odgovarajuće uvodnice: LK i LKH

Upotreba:
- elektroinstalacije, razvodne ploče, razvodni ormari, strojogradnja i robotika

Material:
wall: special premium ether-polyurethane
spiral: plastic coated spring steel wire

Temperature range:
-40°C to 90°C
short-term: to 125°C

Colour(s)/Designs:
- Blue-metallic oriented to RAL 5007

Characteristics:
- plastic coated spring steel wire
- wall thickness 0.4 - 0.9 mm approx. Depending on diameter
- highly flexible
- high tensile strength and tear resistant
- gas and liquid-tight
- good resistance to UV and ozone
- kink-proof
- abrasion-proof
- small bending radius

Accessories:
- Suitable gland: LK and LKH

Applications:
- for electric installations, installation in switchboard plant, switch cabinets, machine construction and robot technique

					10 m kolut / ring			
odgovarajuće uvodnice suitable glands	NW NW	I-Ø mm I-Ø mm	A-Ø mm A-Ø mm	Polumjer savijanja mm ±10% Bending radius mm ±10%	Broj artikla metalik plava Art.no blue-metallic	JP m PU m	Broj artikla metalik plava Art.no blue-metallic	JP m PU m
PG 7 / M 12	7	7,0	10,0	10,0	1603600	10	1603620	50
PG 9 / M 16	9	10,0	14,0	14,0	1603601	10	1603621	50
PG 11 / M 20	11	13,0	17,0	17,0	1603602	10	1603622	50
PG 13,5 / -	13,5	15,0	19,0	19,0	1603603	10	1603623	50
PG 16 / M 25	16	16,0	21,0	21,0	1603604	10	1603624	50
PG 21 / M 32	21	21,0	27,0	27,0	1603605	10	1603625	50
PG 29 / M 40	29	30,0	36,0	36,0	1603606	10	1603626	25
PG 36 / M 50	36	38,0	45,0	45,0	1603607	10	1603627	25
PG 42 / -	42	44,0	52,0	52,0	1603608	10	1603628	25
PG 48 / M 63	48	48,0	56,0	56,0	1603609	10	1603629	25

Uvodnica LK

LK Gland

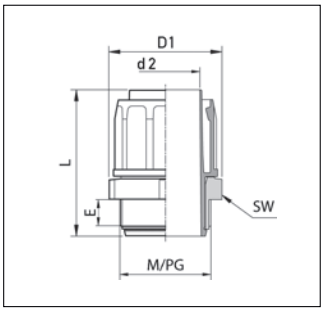

RoHS | IP 54 | EN 60529

Materijal:
polipropilen(PP)

Radna temperatura:
-10°C do 110°C

Boje/izvedbe/pakiranja:
- siva
- vanjski navoj: PG/metrički

Svojstva:
- usporava gorenje
- bez halogena
- dobra kemijska otpornost
- dobra UV otpornost i otpornost na ozon
- okretni vanjski navoj
- stožasti unutarnji utor kao zaštita od ošetećivanja vodiča
- otpornost na vibracije i istezanje

Upotreba:
- odgovara za sve Schlemmer Flex

Material:
Polypropylene (PP)

Temperature range:
-10°C to 110°C

Colour(s)/Designs:
- Grey
- Outer thread: PG/metric

Characteristics:
- flame resistant
- free of halogen
- good chemical resistance
- good UV- and ozone resistance
- turnable external thread
- conical inner socket as protection of inserted cables against damages
- vibration and tension resistant

Applications:
- Suitable for all Schlemmer Flex

2.2

Vanjski navoj External thread	NW NW	odgovara za Ø- l x A mm Fits for Ø- l x A mm	L mm L mm	E mm E mm	SW mm SW mm	Ø-D 1 mm Ø-D1 mm	Ø-d 2 mm Ø-d 2 mm	Broj artikla siva Art.no grey	JP kom. PU pcs.
PG / PG									
PG 7	7	7 x 10	41,0	7,5	17,0	18,7	5,5	3407607	50
PG 9	9	10 x 14	44,0	8,5	20,0	22,0	8,8	3407609	50
PG 11	11	13 x 17	47,5	9,0	24,0	26,4	11,1	3407611	50
PG 13,5	13,5	14 x 19	49,5	9,5	27,0	29,7	13,0	3407613	50
PG 16	16	16 x 21	52,0	10,0	30,0	32,8	14,8	3407616	50
PG 21	21	21 x 27	55,0	11,0	36,0	39,3	19,4	3407621	25
PG 29	29	30 x 36	57,8	12,0	46,0	50,2	27,9	3407629	25
PG 36	36	38 x 45	61,0	13,0	55,0	60,0	35,6	3407636	25
PG 42	42	44 x 52	62,3	13,0	62,0	67,5	41,9	3407642	10
PG 48	48	48 x 56	63,0	13,5	65,0	71,0	45,9	3407648	10
metrički / Metric									
M 12 x 1,5	7	7 x 10	41,0	7,5	17,0	18,7	5,5	3407512	50
M 16 x 1,5	9	10 x 14	44,0	8,5	20,0	22,0	8,8	3407516	50
M 20 x 1,5	11	13 x 17	47,5	9,0	24,0	26,4	11,1	3407520	50
M 25 x 1,5	16	16 x 21	52,0	10,0	30,0	32,8	14,8	3407525	50
M 32 x 1,5	21	21 x 27	55,0	11,0	36,0	39,3	19,4	3407532	25
M 40 x 1,5	29	30 x 36	57,8	12,0	46,0	50,2	27,9	3407540	25
M 50 x 1,5	36	38 x 45	61,0	13,0	55,0	60,0	35,6	3407550	25
M 63 x 1,5	48	48 x 56	63,0	13,5	65,0	71,0	45,9	3407563	10

Uvodnica LKH
sa montažnom prirubnicom

LKH Gland
with mounting flange

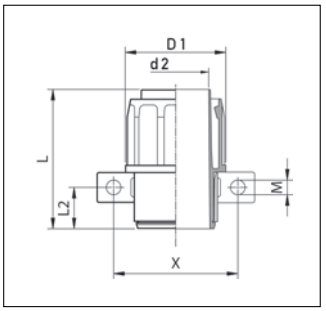

RoHS | IP 54 | EN 60529

Materijal:
polipropilen(PP)

Radna temperatura:
-10°C do 110°C

Boje/izvedbe/pakiranja:
- siva

Svojstva:
- usporava gorenje
- bez halogena
- dobra kemijska otpornost
- dobra UV otpornost i otpornost na ozon
- okretna prirubnica za montažu
- stožasti unutarnji utor kao zaštita od ošetećivanja vodiča
- otpornost na vibracije i istezanje

Upotreba:
- odgovara za sve Schlemmer Flex

Material:
Polypropylene (PP)

Temperature range:
-10°C to 110°C

Colour(s)/Designs:
- Grey

Characteristics:
- flame resistant
- free of halogen
- good chemical resistance
- good UV- and ozone resistance
- turnable mounting flange
- conical inner socket as protection of inserted cables against damages
- vibration and tension resistant

Applications:
- Suitable for all Schlemmer Flex

2.2

NW NW	odgovara za Ø- l x A mm Fits for Ø- l x A mm	L mm L mm	X mm X mm	Ø M mm Ø M mm	L2 mm L2 mm	Ø-D 1 mm Ø-D1 mm	Ø-d 2 mm Ø-d 2 mm	Broj artikla siva Art.no grey	JP kom. PU pcs.
7	7 x 10	41,0	25,0	5,7	10,5	36,0	5,5	3407707	50
9	10 x 14	44,0	29,0	5,7	12,5	40,0	8,8	3407709	50
11	13 x 17	47,5	37,0	5,7	13,0	50,0	11,1	3407711	50
13,5	14 x 19	49,5	37,0	5,7	14,0	50,0	13,0	3407713	50
16	16 x 21	52,0	37,0	5,7	15,5	50,0	14,8	3407716	50
21	21 x 27	55,0	43,0	5,7	16,5	57,0	19,4	3407721	25
29	30 x 36	57,8	53,0	6,7	17,0	67,0	27,9	3407729	25
36	38 x 45	61,0	65,0	6,7	18,5	80,0	35,6	3407736	25
42	44 x 52	62,3	72,0	6,7	19,0	88,0	41,9	3407742	10
48	48 x 56	63,0	76,0	6,7	19,0	93,0	45,9	3407748	10

Cijev metalna MS-B

Metal tube bare MS-B

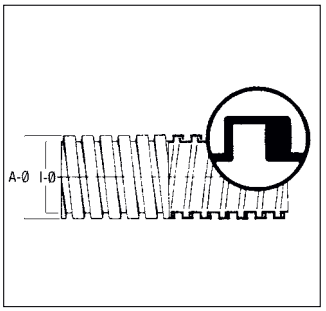

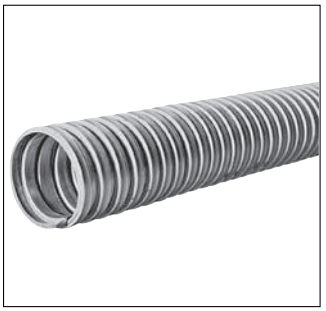

RoHS | IP 50

Materijal:
čelik pocinčani

Radna temperatura:
-50°C do 250°C

Boje/izvedbe/pakiranja:
- ostale dimenzije na upit

Svojstva:
- okrugli presjek
- spiralno rebrasta
- pravokutni profil
- pravokutan, zabravljen profil
- metalna zaštitna cijev bez brtvljenja
- otpornost na pritisak i udarac

Pribor:
- odgovarajuće uvodnice: Rakkord MS-B

Upotreba:
- zaštitne cijevi s dugi vijekom upotrebe za ožičenja strojeva i za vodiče visokog napona

Material:
galvanized steel

Temperature range:
-50°C to 250°C

Colour(s)/Designs:
- Other dimensions on request

Characteristics:
- round cross-section
- helical-corrugated
- angular profile
- Square-locked profile
- metal protective tube with no sealing
- pressure-proof and impact resistant

Accessories:
- Suitable glands: Rakkord MS-B

Applications:
- stabile protective tube for electric wiring of machine connections and high-voltage current line as bent hose.

2.2

				10 m kolut/ring			
odgovarajuće uvodnice suitable glands	I-Ø mm metalna I-Ø mm bare	A-Ø mm metalna A-Ø mm bare	Polumjer savijanja mm Bending radius mm	Broj artikla metalna Art. No. metal	kolut m Ring m	Broj artikla metalna Art. no. metal	kolut m Ring m
PG 7	8,0	10,0	32,0	0001082	10	0000086	50
PG 9 / M 16	11,0	14,0	45,0	0001112	10	0000116	50
PG 11 / M 16	14,0	17,0	50,0	0001147	10	0000140	50
PG 13,5 / M 20	16,0	19,0	50,0	0001163	10	0000167	50
PG 16 / M 20	18,0	21,0	55,0	0001180	10	0000183	50
PG 21 / M 25	23,0	27,0	65,0	0001236	10	0000230	25
PG 29 / M 32	32,0	36,0	95,0	0001325	10	0000329	25
PG 36 / M 40	40,0	45,0	105,0	0001406	10	0000400	25
PG 42 / M 50	45,0	50,0	130,0	0001457	10	0000450	25
PG 48 / M 63	50,0	56,0	140,0	0001503	10	0000507	25

Uvodnica cijevna Rakkord MS-B

PG

Conduit gland Rakkord MS-B

PG

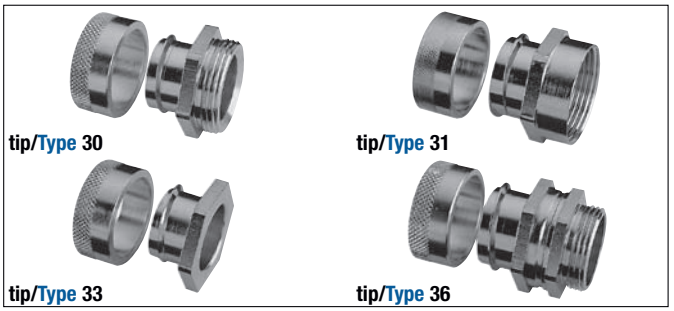

RoHS | IP 54

Materijal:
mesing niklani

Izvedbe:
- PG navoj

Upotreba:
- odgovara za metalnu cijev MS-B

Material:
nickel-plated brass

Designs:
- PG thread

Applications:
- Suitable for bare metal tube MS-B

2.2

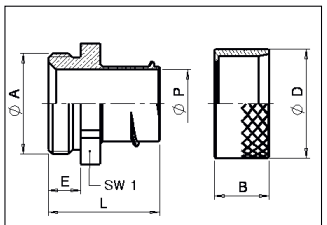

tip/Type 30

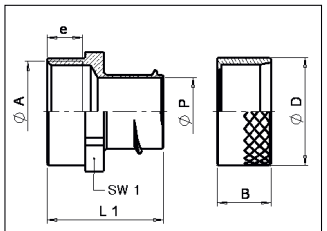

tip/Type 31

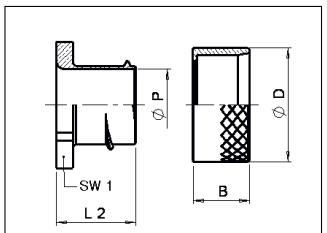

tip/Type 33

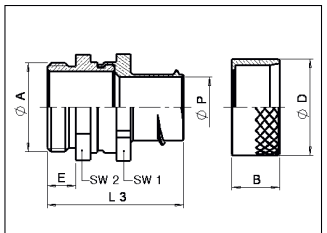

tip/Type 36

	PG PG	odgovara za l x A Ø mm suitable for l x A Ø mm	tip Type	E mm E mm	P mm P mm	SW 1 mm SW 1 mm	SW 2 SW 2 mm	Broj artikla Art. no.	JP kom. PU pcs.
tip 30	PG 7	8,0 x 10,0	300810/7	5,0	7,0	14,0	-	2000075	50
s vanjskim	PG 9	11,0 x 14,0	301114/9	5,0	9,6	17,0	-	2000091	50
navojem	PG 11	14,0 x 17,0	301417/11	6,0	12,6	20,0	-	2000113	50
Type 30	PG 13,5	16,0 x 19,0	301619/13	6,0	14,5	22,0	-	2000130	50
armoured	PG 16	18,0 x 21,0	301821/16	6,0	16,1	24,0	-	2000164	50
thread	PG 21	23,0 x 27,0	302327/21	7,0	21,7	30,0	-	2000210	25
	PG 29	32,0 x 36,0	303236/29	8,0	30,1	39,0	-	2000296	10
	PG 36	40,0 x 45,0	304045/36	8,0	38,5	50,0	-	2000369	10
	PG 42	45,0 x 52,0	304552/42	10,0	43,0	60,0	-	2000423	5
	PG 48	50,0 x 56,0	305056/48	10,0	48,2	65,0	-	2000482	5
tip 31	PG 7	8,0 x 10,0	310810/7	6,0	7,0	14,0	-	2001071	100
s unutarnjim	PG 9	11,0 x 14,0	311114/9	7,0	9,6	17,0	-	2001098	50
navojem	PG 11	14,0 x 17,0	311417/11	8,0	12,6	20,0	-	2001110	50
Type 31	PG 13,5	16,0 x 19,0	311619/13	9,0	14,5	22,0	-	2001136	50
with	PG 16	18,0 x 21,0	311821/16	9,0	16,1	24,0	-	2001160	25
internal	PG 21	23,0 x 27,0	312327/21	10,0	21,7	30,0	-	2001217	25
thread	PG 29	32,0 x 36,0	313236/29	12,0	30,1	39,0	-	2001292	10
	PG 36	40,0 x 45,0	314045/36	13,0	38,5	50,0	-	2001365	10
	PG 42	45,0 x 52,0	314552/42	14,0	43,0	60,0	-	2001420	5
	PG 48	50,0 x 56,0	315056/48	16,0	48,2	65,0	-	2001489	5
tip 33	PG 7	8,0 x 10,0	330810/7	-	7,0	14,0	-	2002078	100
bez	PG 9	11,0 x 14,0	331114/9	-	9,6	17,0	-	2002094	50
navoja	PG 11	14,0 x 17,0	331417/11	-	12,6	20,0	-	2002116	50
Type 33	PG 13,5	16,0 x 19,0	331619/13	-	14,5	22,0	-	2002132	50
no	PG 16	18,0 x 21,0	331821/16	-	16,1	24,0	-	2002167	25
thread	PG 21	23,0 x 27,0	332327/21	-	21,7	30,0	-	2002213	25
	PG 29	32,0 x 36,0	333236/29	-	30,1	39,0	-	2002299	10
	PG 36	40,0 x 45,0	334045/36	-	38,5	50,0	-	2002361	10
	PG 42	45,0 x 52,0	334552/42	-	43,0	60,0	-	2002426	5
	PG 48	50,0 x 56,0	335056/48	-	48,2	65,0	-	2002485	5
tip 36	PG 7	8,0 x 10,0	360810/7	5,0	7,0	14,0	13,0	2003074	100
okretna	PG 9	11,0 x 14,0	361114/9	5,0	9,6	17,0	16,0	2003090	50
sa	PG 11	14,0 x 17,0	361417/11	6,0	12,6	20,0	19,0	2003112	50
vanjskim	PG 13,5	16,0 x 19,0	361619/13	6,0	14,5	22,0	21,0	2003139	50
navojem	PG 16	18,0 x 21,0	361821/16	6,0	16,1	24,0	23,0	2003163	25
Type 36	PG 21	23,0 x 27,0	362327/21	7,0	21,7	30,0	24,0	2003210	25
turnable	PG 29	32,0 x 36,0	363236/29	8,0	30,1	39,0	39,0	2003295	10
with	PG 36	40,0 x 45,0	364045/36	8,0	38,5	50,0	48,0	2003368	10
external	PG 42	45,0 x 52,0	364552/42	10,0	43,0	60,0	55,0	2003422	5
thread	PG 48	50,0 x 56,0	365056/48	10,0	48,2	65,0	60,0	2003481	5

Uvodnica cijevna Rakkord MS-B

metrička

Conduit gland Rakkord MS-B

Metric

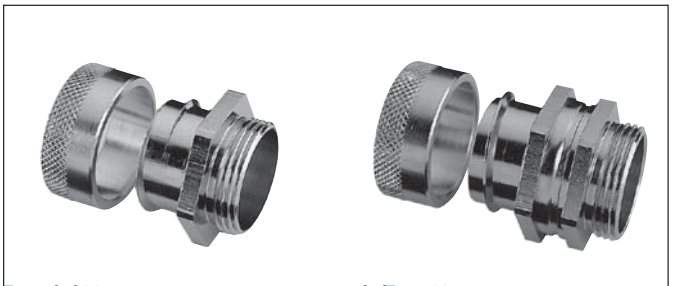

Type tip/ 30 tip/Type 36

RoHS | IP 54

Materijal:
mesing niklani

Izvedbe:
- metrički navoj

Upotreba:
- odgovara za metalnu cijev MS-B

Material:
nickel-plated brass

Designs:
- Metric thread

Applications:
- Suitable for bare metal tube MS-B

2.2

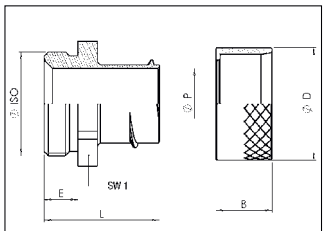

tip/Type 30

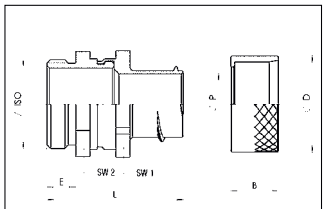

tip/Type 36

	metrički Metric	odgovara za l x A Ø mm suitable for l x A Ø mm	tip Type	E mm kratki/dugi E mm short/long	P mm P mm	SW 1 mm SW 1 mm	SW 2 mm SW 2 mm	Broj artikla kratki navoj Art. no. short thread	Broj artikla dugi navoj Art. no. long thread	JP kom. PU pcs.
tip 30	M 16	11,0 x 14,0	301114/M 16	6,0/15,0	9,6	17,0	-	2051010	2051117	50
s vanjskim	M 16	14,0 x 17,0	301417/M 16	6,0/15,0	11,6	20,0	-	2051028	2051125	50
navojem	M 20	16,0 x 19,0	301619/M 20	6,0/15,0	14,5	22,0	-	2051036	2051133	50
Type 30	M 20	18,0 x 21,0	301821/M 20	6,0/15,0	16,1	24,0	-	2051044	2051141	50
armoured	M 25	23,0 x 27,0	302327/M 25	7,0/15,0	21,2	30,0	-	2051052	2051150	20
thread	M 32	32,0 x 36,0	303236/M 32	8,0/15,0	26,5	39,0	-	2051060	2051168	20
	M 40	40,0 x 45,0	304045/M 40	8,0/15,0	35,2	50,0	-	2051079	2051176	20
	M 50	45,0 x 52,0	304552/M 50	9,0/15,0	43,0	60,0	-	2051087	2051184	10
	M 63	50,0 x 56,0	305056/M 63	10,0/15,0	48,2	65,0	-	2051095	2051192	5
tip 36	M 16	11,0 x 14,0	361114/M 16	6,0/15,0	9,6	17,0	16,0	2052016	2052113	50
okretna	M 16	14,0 x 17,0	361417/M 16	6,0/15,0	11,6	20,0	19,0	2052024	2052121	50
sa	M 20	16,0 x 19,0	361619/M 20	6,0/15,0	14,5	22,0	24,0	2052032	2052130	50
vanjskim	M 20	18,0 x 21,0	361821/M 20	6,0/15,0	16,1	24,0	24,0	2052040	2052148	50
navojem	M 25	23,0 x 27,0	362327/M 25	7,0/15,0	21,2	30,0	24,0	2052059	2052156	20
Type 36	M 32	32,0 x 36,0	363236/M 32	8,0/15,0	26,5	39,0	39,0	2052067	2052164	20
turnable	M 40	40,0 x 45,0	364045/M 40	8,0/15,0	35,2	50,0	48,0	2052075	2052172	20
with	M 50	45,0 x 52,0	364552/M 50	10,0/15,0	43,0	60,0	55,0	2052083	2052180	10
external	M 63	50,0 x 56,0	365056/M 63	10,0/15,0	48,2	65,0	64,0	2052091	2052199	5
thread										

Cijev metalna MS-PU

PU plastificirana

Metal tube MS-PU

with PU sheat

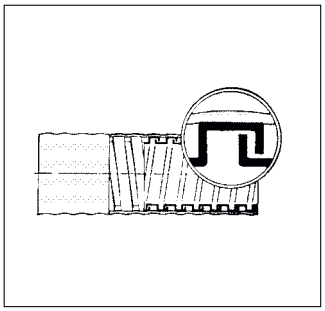

RoHS | IP 67

Materijal:
cijev: čelik pocinčani
plašt: poliuretan PU

Radna temperatura:
-45°C do 105°C
kratkotrajno: 125°C

Boje/izvedbe/pakiranja:
- crna

Svojstva:
- spiralno rebrasta
- pravokutan, zabravljen profil
- vrlo fleksibilna na hladnoći
- visoka otpornost na habanje
- nepropusna za tekućine, bez halogena
- dobra otpornost na ulje, benzin i maziva
- dobra otpornost na lužine i kiseline
- dobra UV otpornost i otpornost na ozon

Pribor:
- odgovarajuće uvodnice: FD i Rakkord MS-PVC

Upotreba:
- nepropusne instalacije u strojevima i uređajima

Material:
Tube: Galvanized steel
Sheath: Polyurethane PU

Temperature range:
-45°C to 105°C
short-term: 125°C

Colour(s)/Designs:
- Black

Characteristics:
- helical-corrugated
- Square-locked profile
- very flexible as with coldness
- non-abrasive
- liquid-tight, free of halogen
- good resistance to oil, petrol and greases
- good resistance to alkalis and acid
- good resistance to UV and ozone

Accessories:
- Suitable gland: FD and Rakkord MS-PVC

Applications:
- liquid-tight installations in the machines and devices

2.2

odgovarajuće uvodnice m suitable glands m	I-Ø mm I-Ø mm	A-Ø mm A-Ø mm	Polumjer savijanja mm Bending radius mm	Broj artikla crna Art. no. black	JP kolut PU ring
PG 9 / M 12	10,0	14,0	40,0	0403900	30
PG 11 / M 16	13,0	17,0	45,0	0403901	30
PG 16 / M 20	17,0	21,0	58,0	0403902	30
PG 21 / M 25	22,0	27,0	72,0	0403903	30
PG 29 / M 32	29,0	36,0	98,0	0403904	30
PG 36 / M 40	38,0	45,0	118,0	0403905	30

Cijev metalna MS-PVC
PVC plastificirana

Metal tube MS-PVC
with PVC sheath

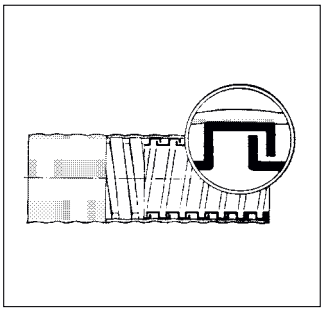

RoHS | IP 67

Materijal:
cijev: čelik pocinčani
plašt: polivinilklorid PVC

Radna temperatura:
-25°C do 100°C

Boje/izvedbe/pakiranja:
- crna, siva
- ostale dimenzije na upit

Svojstva:
- spiralno rebrasta
- pravokutan, zabravljen profil
- bez silikona i kadmija
- vatrostalni PVC-plašt
- posebno savitljiva
- otporna na pritisak

Pribor:
- odgovarajuće uvodnice: FD i Rakkord MS-PVC

Upotreba:
- izdržljiva zaštitna cijev za električne vodiče

Material:
Tube: galvanized steel
sheath: Polyvinylchloride PVC

Temperature range:
-25°C to 100°C

Colour(s)/Designs:
- Black, grey
- other dimensions on request

Characteristics:
- helical-corrugated
- Square-locked profil
- contains no silicone or cadmium
- flame retardant PVC sheath
- very flexible
- pressure-proof

Accessories:
- Suitable gland: FD and Rakkord MS-PVC

Applications:
- robust protective tube for electric lines

2.2

				10 m kolut/ring					
odgovarajuće uvodnice suitable glands	I-Ø mm I-Ø mm	A-Ø mm A-Ø mm	Polumjer savijanja mm Bending radius mm	Broj artikla siva Art. no. grey	Broj artikla crna Art. no. black	kolut m Ring m	Broj artikla siva Art. no. grey	Broj artikla crna Art. no. black	kolut m Ring m
PG 7	7,0	10,0	25,0	0101079	0102507	10	0100072	0102075	50
PG 9 / M 16	10,0	14,0	35,0	0101109	0102510	10	0100102	0102105	50
PG 11 / M 16	13,0	17,0	50,0	0101133	0102513	10	0100137	0102130	50
PG 13,5 / M 20	15,0	19,0	55,0	0101150	0102515	10	0100153	0102156	50
PG 16 / M 20	17,0	21,0	60,0	0101176	0102517	10	0100170	0102172	50
PG 21 / M 25	21,0	27,0	65,0	0101214	0102521	10	0100218	0102210	25
PG 29 / M 32	28,0	36,0	75,0	0101281	0102528	10	0100285	0102288	25
PG 36 / M 40	37,0	45,0	90,0	0101370	-	10	0100374	0102377	25
PG 42 / M 50	44,0	52,0	120,0	-	-	-	0100447	0102440	25
PG 48 / M 63	48,0	56,0	135,0	0101486	-	10	0100480	0102482	25

Uvodnica cijevna Rakkord MS-PU i MS-PVC

PG

Conduit gland Rakkord MS-PU and MS-PVC

PG

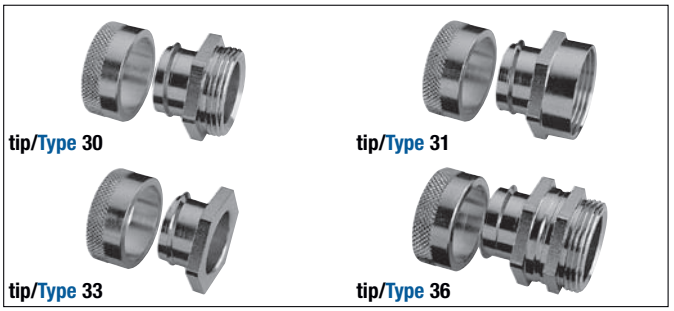

RoHS | IP 54

Materijal:
mesing niklani

Izvedbe:
- PG navoj

Upotreba:
- za metalne cijevi, sa PVC- i PU-plaštom (MS-PVC i MS-PU)

Material:
nickel-plated brass

Designs:
- PG thread

Applications:
- for metal tube with PVC and PU sheath (MS-PVC and MS-PU)

2.2

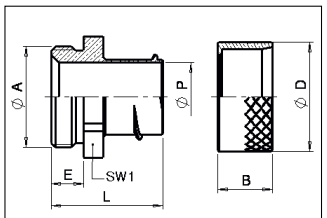

tip/Type 30

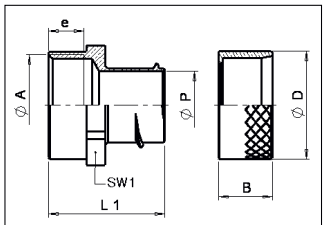

tip/Type 31

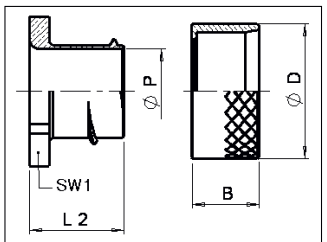

tip/Type 33

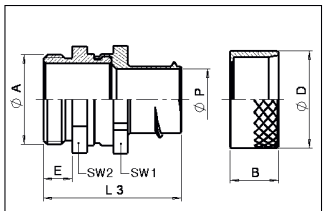

tip/Type 36

	PG PG	odgovara za l x A Ø mm suitable for l x A Ø mm	tip Type	E mm E mm	P mm P mm	SW 1 mm SW 1 mm	SW 2 mm SW 2 mm	Broj artikla Art. no.	JP kom. PU pcs.
tip 30	PG 7	7,0 x 10,0	300710/7	5,0	6,0	14,0	-	2004070	100
s vanjskim	PG 9	10,0 x 14,0	301014/9	5,0	8,8	17,0	-	2004097	50
navojem	PG 11	13,0 x 17,0	301317/11	6,0	11,5	20,0	-	2004119	50
Type 30	PG 13,5	15,0 x 19,0	301519/13	6,0	13,8	22,0	-	2004135	50
armoured	PG 16	17,0 x 21,0	301721/16	6,0	15,5	24,0	-	2004160	25
thread	PG 21	21,0 x 27,0	302127/21	7,0	19,7	30,0	-	2004216	25
	PG 29	28,0 x 36,0	302836/29	8,0	26,5	39,0	-	2004291	10
	PG 36	37,0 x 45,0	303745/36	8,0	35,0	50,0	-	2004364	10
	PG 42	44,0 x 52,0	304452/42	10,0	42,0	60,0	-	2004429	5
	PG 48	48,0 x 56,0	304856/48	10,0	46,0	64,0	-	2004488	5
tip 31	PG 7	7,0 x 10,0	310710/7	6,0	6,0	14,0	-	2005077	100
s unutarnjim	PG 9	10,0 x 14,0	311014/9	7,0	8,8	17,0	-	2005093	50
navojem	PG 11	13,0 x 17,0	311317/11	8,0	11,5	20,0	-	2005115	50
Type 31	PG 13,5	15,0 x 19,0	311519/13	9,0	13,8	22,0	-	2005131	50
with	PG 16	17,0 x 21,0	311721/16	9,0	15,5	24,0	-	2005166	25
internal	PG 21	21,0 x 27,0	312127/21	10,0	19,7	30,0	-	2005212	25
thread	PG 29	28,0 x 36,0	312836/29	12,0	26,5	39,0	-	2005298	10
	PG 36	37,0 x 45,0	313745/36	13,0	35,0	50,0	-	2005360	10
	PG 42	44,0 x 52,0	314452/42	14,0	42,0	60,0	-	2005425	5
	PG 48	48,0 x 56,0	314856/48	16,0	46,0	64,0	-	2005484	5
tip 33	PG 7	7,0 x 10,0	330710/7	-	6,0	14,0	-	2006073	100
bez	PG 9	10,0 x 14,0	331014/9	-	8,8	17,0	-	2006090	50
navoja	PG 11	13,0 x 17,0	331317/11	-	11,5	20,0	-	2006111	50
Type 33	PG 13,5	15,0 x 19,0	331519/13	-	13,8	22,0	-	2006138	50
no	PG 16	17,0 x 21,0	331721/16	-	15,5	24,0	-	2006162	25
thread	PG 21	21,0 x 27,0	332127/21	-	19,7	30,0	-	2006219	25
	PG 29	28,0 x 36,0	332836/29	-	26,5	39,0	-	2006294	10
	PG 36	37,0 x 45,0	333745/36	-	35,0	50,0	-	2006367	10
	PG 42	44,0 x 52,0	334452/42	-	42,0	60,0	-	2006421	5
	PG 48	48,0 x 56,0	334856/48	-	46,0	64,0	-	2006480	5
tip 36	PG 7	7,0 x 10,0	360710/7	5,0	6,0	14,0	13,0	2007070	100
okretna	PG 9	10,0 x 14,0	361014/9	5,0	8,8	17,0	16,0	2007096	100
sa	PG 11	13,0 x 17,0	361317/11	6,0	11,5	20,0	19,0	2007118	50
vanjskim	PG 13,5	15,0 x 19,0	361519/13	6,0	13,8	22,0	21,0	2007134	50
navojem	PG 16	17,0 x 21,0	361721/16	6,0	15,5	24,0	23,0	2007169	25
Type 36	PG 21	21,0 x 27,0	362127/21	7,0	19,7	30,0	29,0	2007215	25
turnable	PG 29	28,0 x 36,0	362836/29	8,0	26,5	39,0	39,0	2007290	10
with	PG 36	37,0 x 45,0	363745/36	8,0	35,0	50,0	48,0	2007363	10
external	PG 42	44,0 x 52,0	364452/42	10,0	42,0	60,0	55,0	2007428	5
thread	PG 48	48,0 x 56,0	364856/48	10,0	46,0	65,0	60,0	2007487	5

Uvodnice cijevne Rakkord MS-PU i MS-PVC

metričke

Conduit gland Rakkord MS-PU and MS-PVC

Metric

tip/Type 30 tip/Type 36

RoHS | IP 54

Materijal:
mesing niklani

Izvedbe:
- metrički navoj

Upotreba:
- za metalne cijevi, sa PVC- i PU-plaštom (MS-PVC i MS-PU)

Material:
nickel-plated brass

Designs:
- Metric thread

Applications:
- for metal tube with PVC and PU sheath (MS-PVC and MS-PU)

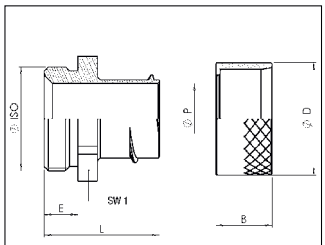

tip/Type 30

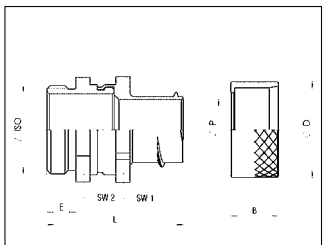

tip/Type 36

	metrički Metric	odgovara za l x A Ø mm suitable for l x A Ø mm	tip Type	E mm kratki/dugi E mm short/long	P mm P mm	SW 1 mm SW 1 mm	SW 2 mm SW 2 mm	Broj artikla kratki navoj Art. no. short thread	Broj artikla dugi navoj Art. no. long thread	JP kom. PU pcs.
tip 30	M 16	10,0 x 14,0	301014/M 16	6,0/15,0	8,5	17,0	-	2034018	2034115	50
s vanjskim	M 16	13,0 x 17,0	301317/M 16	6,0/15,0	11,6	20,0	-	2034026	2034123	50
navojem	M 20	13,0 x 17,0	301317/M 20	-/15,0	11,6	22,0	-	-	2034130	50
Type 30	M 20	15,0 x 19,0	301519/M 20	6,0/15,0	13,8	22,0	-	2034034	2034131	50
armoured	M 20	17,0 x 21,0	301721/M 20	6,0/15,0	15,5	24,0	-	2034042	2034140	50
thread	M 25	21,0 x 27,0	302127/M 25	7,0/15,0	19,7	30,0	-	2034050	2034158	20
	M 32	28,0 x 36,0	302836/M 32	8,0/15,0	26,5	39,0	-	2034069	2034166	20
	M 40	37,0 x 45,0	303745/M 40	8,0/15,0	35,0	50,0	-	2034077	2034174	20
	M 50	44,0 x 52,0	304452/M 50	9,0/15,0	42,0	60,0	-	2034085	2034182	10
	M 63	48,0 x 56,0	304856/M 63	10,0/15,0	46,0	65,0	-	2034093	2034190	5
tip 36	M 10	7,0 x 10,0	360710/M 10	6,0/15,0	6,0	14,0	13,0	2035006	2035103	50
okretna	M 16	10,0 x 14,0	361014/M 16	6,0/15,0	8,5	17,0	16,0	2035014	2035111	50
sa	M 16	13,0 x 17,0	361317/M 16	6,0/15,0	11,6	20,0	19,0	2035022	2035120	50
vanjskim	M 20	15,0 x 19,0	361519/M 20	6,0/15,0	13,8	22,0	24,0	2035030	2035138	50
navojem	M 20	17,0 x 21,0	361721/M 20	6,0/15,0	15,5	24,0	24,0	2035049	2052070	50
Type 36	M 25	21,0 x 27,0	362127/M 25	7,0/15,0	19,7	30,0	29,0	2035057	2035154	20
turnable	M 32	28,0 x 36,0	362836/M 32	8,0/15,0	26,5	39,0	39,0	2035065	2035162	20
with	M 40	37,0 x 45,0	363745/M 40	8,0/15,0	35,0	50,0	48,0	2035073	2035170	20
external	M 50	44,0 x 52,0	364452/M 50	9,0/15,0	42,0	60,0	55,0	2035081	2035189	10
thread	M 63	48,0 x 56,0	364856/M 63	10,0/15,0	46,0	65,0	64,0	2035090	2035197	5

Uvodnica cijevna FD

nepropusna za tekućine za MS-PVC i MS-PU

Conduit gland FD

liquid-tight for MS-PVC and MS-PU

ravna / straight

kutna 45° / 45°-angle

kutna 90° / 90°-angle

RoHS | IP 68

Materijal:
mesing niklani
brtveni prsten: NBR

Radna temperatura:
-45°C do 105°C

Izvedbe:
- metrički navoj
- ravna, pod kutem od 45° i 90°

Svojstva:
- nepropusna za tekućine
- bez halogena
- visoka otpornost na izvlačenje
- besprijekorno uzemljenje
- jednostavna montaža

Upotreba:
- za metalne cijevi MS-PVC i MS-PU

Material:
nickel plated brass
sealing ring: NBR

Temperature range:
-45°C bis 105°C

Designs:
- metric thread
- straight, 45° and 90° angle

Characteristics:
- liquid tight
- Free of halogen
- high pull out strength
- impeccable grounding
- simple Montage

Applications:
- for metal tube MS-PVC and MS-PU

2.2

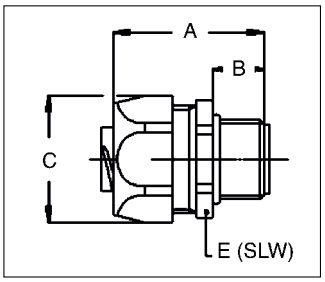

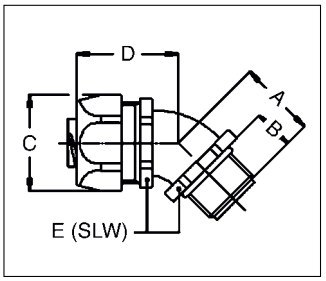

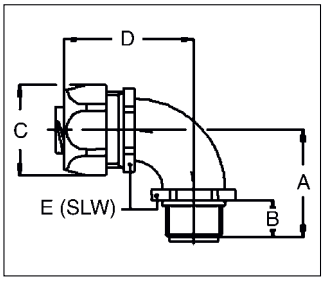

navoj Thread	odgovara za A-Ø suitable for A-Ø	A mm A mm	D mm D mm	B mm B mm	C mm C mm	E SLW mm E SLW mm	najmanji I -Ø mm Min. intern diam. I -Ø mm	Broj artikla Art. no.	JP kom. PU pcs.
metrički navoj, ravna / metric straight									
M 12 x 1,5	14,0	31,0		10,0	22,0	20,0	8,5	2609977	50
M 16 x 1,5	17,0	31,0		10,0	26,0	24,0	11,0	2609978	50
M 20 x 1,5	21,0	32,0		10,0	29,0	27,0	15,0	2609979	50
M 25 x 1,5	27,0	34,0		10,0	35,0	33,0	19,5	2609980	25
M 32 x 1,5	36,0	37,0		12,0	45,0	44,0	26,0	2609981	10
M 40 x 1,5	45,0	45,0		14,0	54,0	55,0	34,5	2609982	5
metrički navoj, kutna 45° / metric 45° Angle									
M 16 x 1,5	17,0	23,0	33,0	12,0	26,0	22,0	10,5	2609983	50
M 20 x 1,5	21,0	23,0	33,0	13,0	29,0	27,0	13,5	2909984	50
M 25 x 1,5	27,0	30,0	36,0	15,0	35,0	33,0	19,0	2609985	25
metrički navoj, kutna 90° / metric 90° Angle									
M 16 x 1,5	17,0	32,0	42,0	12,0	26,0	22,0	10,5	2609986	50
M 20 x 1,5	21,0	36,0	43,0	13,0	29,0	27,0	13,5	2609987	50
M 25 x 1,5	27,0	43,0	48,0	15,0	35,0	33,0	19,0	2609988	25

Cijev metalna MS-DU

sa plaštem od žičane pletenice

Metal tube MS-DU

with wire mesh sheath

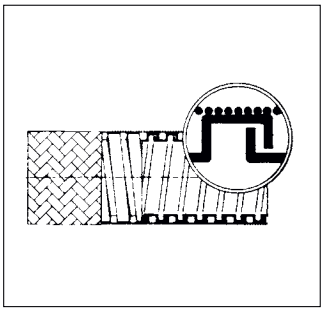

RoHS | IP 50

Materijal:
cijev: čelik pocinčani
plašt: čelična pocinčana žica

Radna temperatura:
-50°C do 250°C

Svojstva:
- spiralno rebrasta
- okrugli presjek
- pravokutni profil
- pravokutan, zabravljen profil
- metalna zaštitna cijev bez brtvljenja
- otporna na pritisak i rastezanje
- otporna na udarce
- izuzetno savitljiva

Pribor:
- odgovarajuće uvodnice: Rakkord MS-DU

Upotreba:
- izdržljiva zaštitna cijev za električne vodiče
- za povećane zahtjeve otpornosti na pritisak
- čelična žičana pletenica za povećano mehaničko opterećenje

Material:
Tube: galvanized steel
Sheath: galvanized iron wire

Temperature range:
-50°C to 250°C

Characteristics:
- helical-corrugated
- round cross-section
- angular profile
- square-locked profil
- protective metal tube with no sealing
- tension and pressure-proof
- shock-resistant
- highly flexible

Accessories:
- Suitable gland: Rakkord MS-DU

Applications:
- robust protective tube for electric lines
- For increased pressure-proof requirements
- Steel wire mesh for increased mechanical load

2.2

				10 m kolut / ring			
odgovarajuće uvodnice suitable glands	I-Ø mm I-Ø mm	A-Ø mm A-Ø mm	Polumjer savijanja mm Bending radius mm	Broj artikla Art. no.	JP kolut m PU Ring m	Broj artikla Art. no.	JP kolut m PU ring m
PG 7	7,0	10,0	25,0	0201078	10	0200077	50
PG 9 / M 16	10,0	14,0	30,0	0201108	10	0200107	50
PG 11 / M 16	13,0	17,0	40,0	0201132	10	0200131	50
PG 13,5 / M 20	15,0	19,0	45,0	0201159	10	0200158	50
PG 16 / M 20	17,0	21,0	50,0	0201175	10	0200174	50
PG 21 / M 25	21,0	27,0	55,0	0201213	10	0200212	25
PG 29 / M 32	28,0	36,0	70,0	0201281	10	0200280	25
PG 36 / M 40	37,0	45,0	95,0	0201378	10	0200379	25
PG 42 / M 50	44,0	52,0	130,0	0201442	10	0200441	25
PG 48 / M 63	48,0	56,0	135,0	0201485	10	0200484	25

Uvodnice cijevne Rakkord MS-DU

PG

Conduit gland Rakkord MS-DU

PG

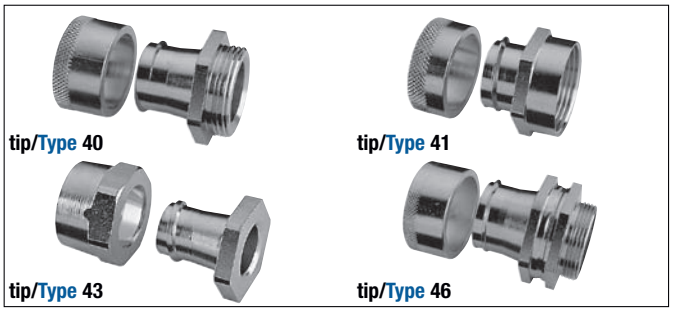

RoHS | IP 54

Materijal:
mesing niklani

Izvedbe:
- PG navoj

Upotreba:
- za metalnu cijev sa plaštem od žičane pletenice MS-DU

Material:
nickel-plated brass

Designs:
- PG thread

Applications:
- for metal tube with wire mesh MS-DU

2.2

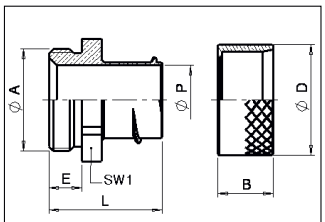

tip/Type 40

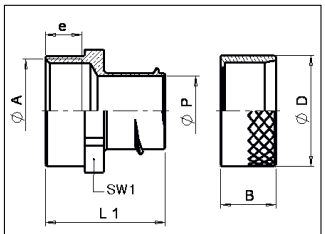

tip/Type 41

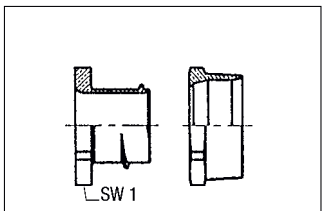

tip/Type 43

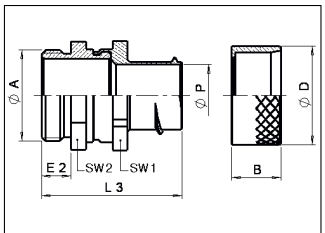

tip/Type 46

	PG PG	odgovara za l x A Ø mm suitable for l x A Ø mm	tip Type	E mm E mm	P mm P mm	SW 1 mm SW 1 mm	SW 2 SW 2 mm	Broj artikla Art. no.	JP kom. PU pcs.
tip 40	PG 7	7,0 x 10,0	400710/7	5,0	6,0	15,0	-	2008076	100
s vanjskim	PG 9	10,0 x 14,0	401014/9	5,0	8,2	17,0	-	2008092	50
navojem	PG 11	13,0 x 17,0	401317/11	6,0	11,5	22,0	-	2008114	50
Type 40	PG 13,5	15,0 x 19,0	401519/13	6,0	13,5	24,0	-	2008130	50
armoured	PG 16	17,0 x 21,0	401721/16	6,0	15,1	27,0	-	2008165	25
thread	PG 21	21,0 x 27,0	402127/21	7,0	19,2	32,0	-	2008211	25
	PG 29	28,0 x 36,0	402836/29	8,0	26,5	41,0	-	2008297	10
	PG 36	37,0 x 45,0	403745/36	8,0	35,0	52,0	-	2008360	10
	PG 42	44,0 x 52,0	404452/42	10,0	42,5	60,0	-	2008424	5
	PG 48	48,0 x 56,0	404856/48	10,0	46,0	65,0	-	2008483	5
tip 41	PG 7	7,0 x 10,0	410710/7	6,0	6,0	15,0	-	2009072	100
sa	PG 9	10,0 x 14,0	411014/9	7,0	8,2	17,0	-	2009099	50
unutarnjim	PG 11	13,0 x 17,0	411317/11	8,0	11,5	22,0	-	2009110	50
navojem	PG 13,5	15,0 x 19,0	411519/13	9,0	13,5	24,0	-	2009137	50
Type 41	PG 16	17,0 x 21,0	411721/16	9,0	15,1	27,0	-	2009161	25
with	PG 21	21,0 x 27,0	412127/21	10,0	19,2	32,0	-	2009218	25
internal	PG 29	28,0 x 36,0	412836/29	12,0	26,5	41,0	-	2009293	10
thread	PG 36	37,0 x 45,0	413745/36	13,0	35,0	52,0	-	2009366	10
	PG 42	44,0 x 52,0	414452/42	14,0	42,5	60,0	-	2009420	5
	PG 48	48,0 x 56,0	414856/48	14,0	46,0	65,0	-	2009480	5
tip 43	PG 7	7,0 x 10,0	430710/7	-	6,0	15,0	-	2010070	100
bez	PG 9	10,0 x 14,0	431014/9	-	8,2	17,0	-	2010097	50
navoja	PG 11	13,0 x 17,0	431317/11	-	11,5	22,0	-	2010119	25
Type 43	PG 13,5	15,0 x 19,0	431519/13	-	13,5	24,0	-	2010135	25
no	PG 16	17,0 x 21,0	431721/16	-	15,1	27,0	-	2010160	25
thread	PG 21	21,0 x 27,0	432127/21	-	19,2	32,0	-	2010216	25
	PG 29	28,0 x 36,0	432836/29	-	26,5	41,0	-	2010291	10
	PG 36	37,0 x 45,0	433745/36	-	35,0	52,0	-	2010364	10
	PG 42	44,0 x 52,0	434452/42	-	42,5	60,0	-	2010429	5
	PG 48	48,0 x 56,0	434856/48	-	46,0	65,0	-	2010488	5
tip 46	PG 7	7,0 x 10,0	460710/7	5,0	6,0	15,0	13,0	2011077	100
okretna	PG 9	10,0 x 14,0	461014/9	5,0	8,2	17,0	16,0	2011093	50
sa	PG 11	13,0 x 17,0	461317/11	6,0	11,5	22,0	19,0	2011115	50
vanjskim	PG 13,5	15,0 x 19,0	461519/13	6,0	13,5	24,0	24,0	2011131	50
navojem	PG 16	17,0 x 21,0	461721/16	6,0	15,1	27,0	24,0	2011166	25
Type 46	PG 21	21,0 x 27,0	462127/21	7,0	19,2	32,0	29,0	2011212	25
turnable	PG 29	28,0 x 36,0	462836/29	8,0	26,5	41,0	39,0	2011298	10
with	PG 36	37,0 x 45,0	463745/36	8,0	35,0	52,0	48,0	2011360	10
external	PG 42	44,0 x 52,0	464452/42	10,0	42,5	60,0	55,0	2011425	5
thread	PG 48	48,0 x 56,0	464856/48	10,0	46,0	65,0	64,0	2011484	5

Uvodnice cijevne Rakkord MS-DU

metrički

Conduit gland Rakkord MS-DU

Metric

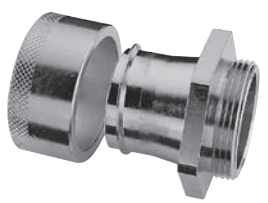

tip/Type 40

tip/Type 46

RoHS | IP 54

Materijal:
mesing niklani

Izvedbe:
- metrički navoj

Upotreba:
- za metalnu cijev sa plaštem od žičane pletenice MS-DU

Material:
nickel-plated brass

Designs:
- Metric thread

Applications:
- for metal tube with wire mesh MS-DU

2.2

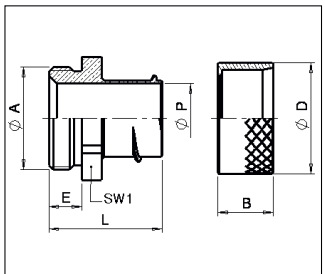

tip/Type 40

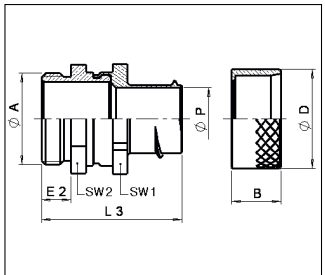

tip/Type 46

	metrički Metric	odgovara za l x A Ø mm suitable for l x A Ø mm	tip Type	E mm kratki/dugi E mm short/long	P mm P mm	SW 1 mm SW 1 mm	SW 2 mm SW 2 mm	Broj artikla kratki navoj Art. no. short thread	Broj artikla dugi navoj Art. no. long thread	JP kom. PU pcs.
tip 40	M 16	10,0 x 14,0	401014/M 16	6,0/15,0	8,2	17,0	-	2036010	2036100	50
s vanjskim	M 16	13,0 x 17,0	401317/M 16	6,0/15,0	11,5	22,0	-	2036029	2036118	50
navojem	M 20	15,0 x 19,0	401519/M 20	6,0/15,0	13,5	24,0	-	2036037	2036126	50
Type 40	M 20	17,0 x 21,0	401721/M 20	6,0/15,0	15,1	27,0	-	2036045	2036134	50
armoured	M 25	21,0 x 27,0	402127/M 25	7,0/15,0	19,2	32,0	-	2036053	2036142	20
thread	M 32	28,0 x 36,0	402836/M 32	8,0/15,0	26,5	41,0	-	2036061	2036150	20
	M 40	37,0 x 45,0	403745/M 40	8,0/15,0	35,0	48,0	-	2036070	2036169	20
	M 50	44,0 x 52,0	404452/M 50	9,0/15,0	42,5	60,0	-	2036088	2036177	10
	M 63	48,0 x 56,0	404856/M 63	10,0/15,0	46,0	65,0	-	2036096	2036185	5
tip 46	M 16	10,0 x 14,0	461014/M 16	6,0/15,0	8,2	17,0	16,0	2037017	2037106	50
okretna	M 16	13,0 x 17,0	461317/M 16	6,0/15,0	11,5	22,0	19,0	2037025	2037114	50
sa	M 20	15,0 x 19,0	461519/M 20	6,0/15,0	13,5	24,0	24,0	2037033	2037122	50
vanjskim	M 20	17,0 x 21,0	461721/M 20	6,0/15,0	15,1	27,0	24,0	2037041	2037130	50
navojem	M 25	21,0 x 27,0	462127/M 25	7,0/15,0	19,2	32,0	29,0	2037050	2037149	20
Type 46	M 32	28,0 x 36,0	462836/M 32	8,0/15,0	26,5	41,0	39,0	2037068	2037157	20
turnable	M 40	37,0 x 45,0	463745/M 40	8,0/15,0	35,0	52,0	48,0	2037076	2037165	20
with	M 50	46,0 x 52,0	464652/M 50	9,0/15,0	42,5	60,0	55,0	2037084	2037173	10
external	M 63	48,0 x 56,0	464856/M 63	10,0/15,0	46,0	65,0	64,0	2037092	2037181	5
thread										

Cijev metalna MS-PVC-DU

PVC plastificirana s plaštem od žičane pletenice

Metal tube MS-PVC-DU

with PVC and wire mesh sheath

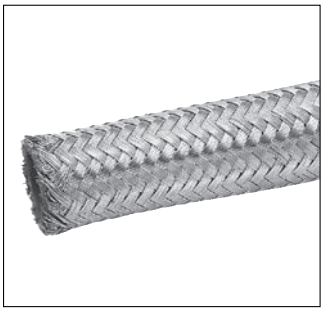

RoHS | IP 67

Materijal:
cijev: čelik pocinčani
plašt: PVC i čelična pocinčana pletenica

Radna temperatura:
-25°C do 100°C

Svojstva:
- okrugli presjek
- pravokutan, zabravljen profil
- zaštitna metalna cijev
- otporna na tekućine, ulja i prašinu
- zaštita od oštrih krhotina i užarenih iskri

Pribor:
- odgovarajuće uvodnice: Rakkord MS-PVC-DU

Upotreba:
- ekstremno otporna metalna cijev za veoma teške uvjete rada s dugim vijekom upotrebe

Material:
Tube: galvanized steel
Sheath: PVC braided with galvanized iron wire

Temperature range:
-25°C to 100°C

Characteristics:
- round cross-section
- square locked profil
- protective metal tube
- oil, water and dust-tight
- protection against sharp chips and glowing sparks

Accessories:
- Suitable gland: Rakkord MS-PVC-DU

Applications:
- extremely resistant metal tube for all kinds of high-grade machine tools

2.2

NW NW	I-Ø mm I-Ø mm	A-Ø mm A-Ø mm	Polumjer savijanja mm Bending radius mm	Broj artikla Art. no.	JP kolut m PU ring m
PG 7	7,0	11,0	25,0	0300071	50
PG 9 / M 16	10,0	15,0	30,0	0300101	50
PG 11 / M 16	13,0	18,0	40,0	0300136	50
PG 13,5 / M 20	15,0	20,0	45,0	0300152	50
PG 16 / M 20	17,0	22,0	50,0	0300179	50
PG 21 / M 25	21,0	28,0	55,0	0300217	25
PG 29 / M 32	28,0	37,0	70,0	0300284	25
PG 36 / M 40	37,0	46,0	95,0	0300373	25
PG 42 / M 50	44,0	53,0	130,0	0300446	25
PG 48 / M 63	48,0	57,0	135,0	0300489	25

Uvodnica cijevna Rakkord MS-PVC-DU

PG

Conduit gland Rakkord MS-PVC-DU

PG

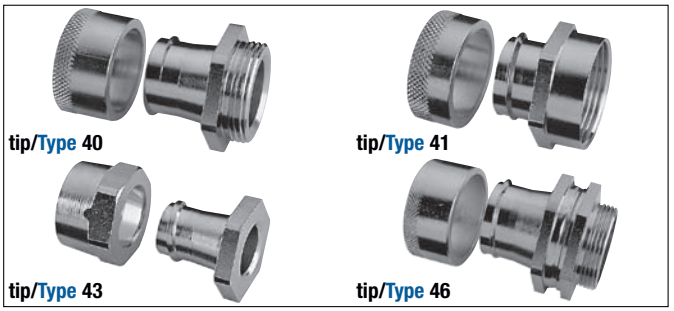

RoHS | IP 54

Materijal:
mesing niklani

Izvedbe:
- PG navoj

Upotreba:
- za metalnu cijev MS-PVC-DU

Material:
nickel-plated brass

Designs:
- PG thread

Applications:
- for metal tube MS-PVC-DU

2.2

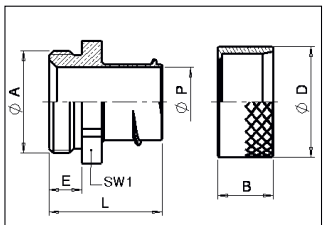

tip/Type 40

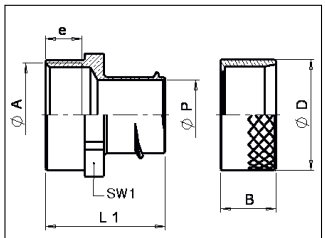

tip/Type 41

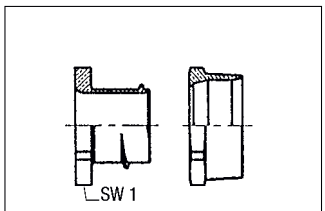

tip/Type 43

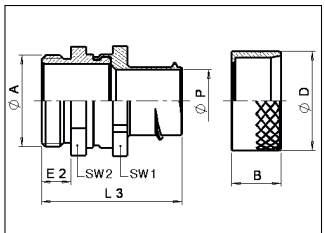

tip/Type 46

	PG PG	odgovara za l x A Ø mm suitable for l x A Ø mm	tip Type	E mm E mm	P mm P mm	SW 1 mm SW 1 mm	SW 2 SW 2 mm	Broj artikla Art. no.	JP kom. PU pcs.
tip 40	PG 7	7,0 x 11,0	400711/7	5,0	6,0	15,0	-	2012073	100
s vanjskim	PG 9	10,0 x 15,0	401015/9	5,0	8,2	17,0	-	2012090	50
navojem	PG 11	13,0 x 18,0	401318/11	6,0	11,5	22,0	-	2012111	50
Type 40	PG 13,5	15,0 x 20,0	401520/13	6,0	13,5	24,0	-	2012138	50
armoured	PG 16	17,0 x 22,0	401722/16	6,0	15,1	27,0	-	2012162	25
thread	PG 21	21,0 x 28,0	402128/21	7,0	19,2	32,0	-	2012219	25
	PG 29	28,0 x 37,0	402837/29	8,0	26,5	41,0	-	2012294	10
	PG 36	37,0 x 46,0	403746/36	8,0	35,2	52,0	-	2012367	10
	PG 42	44,0 x 53,0	404453/42	10,0	42,5	60,0	-	2012421	5
	PG 48	48,0 x 57,0	404857/48	10,0	46,0	65,0	-	2012480	5
tip 41	PG 7	7,0 x 11,0	410711/7	5,0	6,0	15,0	-	2013070	100
sa	PG 9	10,0 x 15,0	411015/9	5,0	8,2	17,0	-	2013096	50
unutarnjim	PG 11	13,0 x 18,0	411318/11	6,0	11,5	22,0	-	2013118	50
navojem	PG 13,5	15,0 x 20,0	411520/13	6,0	13,5	24,0	-	2013134	50
Type 41	PG 16	17,0 x 22,0	411722/16	6,0	15,1	27,0	-	2013169	25
with	PG 21	21,0 x 28,0	412128/21	7,0	19,2	32,0	-	2013215	25
internal	PG 29	28,0 x 37,0	412837/29	8,0	26,5	41,0	-	2013290	10
thread	PG 36	37,0 x 46,0	413746/36	8,0	35,2	52,0	-	2013363	10
	PG 42	44,0 x 53,0	414453/42	10,0	42,5	60,0	-	2013428	5
	PG 48	48,0 x 57,0	414857/48	10,0	46,0	65,0	-	2013487	5
tip 43	PG 7	7,0 x 11,0	430711/7	5,0	6,0	15,0	-	2014076	100
bez	PG 9	10,0 x 15,0	431015/9	5,0	8,2	17,0	-	2014092	50
navoja	PG 11	13,0 x 18,0	431318/11	6,0	11,5	22,0	-	2014114	50
Type 43	PG 13,5	15,0 x 20,0	431520/13	6,0	13,5	24,0	-	2014130	50
no	PG 16	17,0 x 22,0	431722/16	6,0	15,1	27,0	-	2014165	25
thread	PG 21	21,0 x 28,0	432128/21	7,0	19,2	32,0	-	2014211	25
	PG 29	28,0 x 37,0	432837/29	8,0	26,5	41,0	-	2014297	10
	PG 36	37,0 x 46,0	433746/36	8,0	35,2	52,0	-	2014360	10
	PG 42	44,0 x 53,0	434453/42	10,0	42,5	60,0	-	2014424	5
	PG 48	48,0 x 57,0	434857/48	10,0	46,0	65,0	-	2014483	5
tip 46	PG 7	7,0 x 11,0	460711/7	5,0	6,0	15,0	13,0	2015072	100
okretna	PG 9	10,0 x 15,0	461015/9	5,0	8,2	17,0	16,0	2015099	50
sa	PG 11	13,0 x 18,0	461318/11	6,0	11,5	22,0	19,0	2015110	50
vanjskim	PG 13,5	15,0 x 20,0	461520/13	6,0	13,5	24,0	21,0	2015137	50
navojem	PG 16	17,0 x 22,0	461722/16	6,0	15,1	27,0	23,0	2015161	25
Type 46	PG 21	21,0 x 28,0	462128/21	7,0	19,2	32,0	29,0	2015218	25
turnable	PG 29	28,0 x 37,0	462837/29	8,0	26,5	41,0	39,0	2015293	10
with	PG 36	37,0 x 46,0	463746/36	8,0	35,2	52,0	48,0	2015366	10
external	PG 42	44,0 x 53,0	464453/42	10,0	42,5	60,0	55,0	2015420	5
thread	PG 48	48,0 x 57,0	464857/48	10,0	46,0	65,0	60,0	2015480	5

Uvodnica cijevna Rakkord MS-PVC-DU

metrička

Conduit gland Rakkord MS-PVC-DU

Metric

tip/Type 40 tip/Type 46

RoHS | IP 54

Materijal:
mesing niklani

Izvedbe:
- metrički navoj

Upotreba:
- za metalnu cijev MS-PVC-DU

Material:
nickel-plated brass

Designs:
- Metric thread

Applications:
- for metal tube MS-PVC-DU

2.2

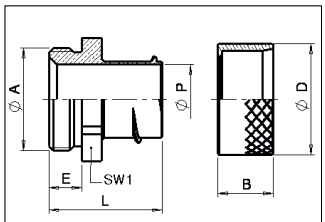

tip/Type 40

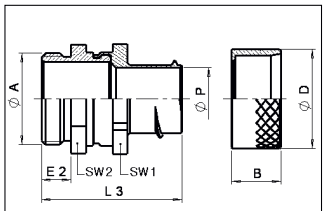

tip/Type 46

	metrički Metric	odgovara za l x A Ø mm suitable for l x A Ø mm	tip Type	E mm E mm	P mm P mm	SW 1 mm SW 1 mm	SW 2 SW 2 mm	Broj artikla Art. no.	JP kom. PU pcs.
tip 40	M 16	10,0 x 15,0	401015/M 16	6,0	8,5	17,0	-	2012516	50
s vanjskim	M 16	13,0 x 18,0	401318/M 16	6,0	11,6	22,0	-	2012517	50
navojem	M 20	15,0 x 20,0	401520/M 20	6,0	13,8	24,0	-	2012520	50
Type 40	M 20	17,0 x 22,0	401722/M 20	6,0	15,5	27,0	-	2012521	50
armoured	M 25	21,0 x 28,0	402128/M 25	7,0	19,7	30,0	-	2012525	20
thread	M 32	28,0 x 37,0	402837/M 32	8,0	26,5	41,0	-	2012532	20
	M 40	37,0 x 46,0	403746/M 40	8,0	35,0	48,0	-	2012540	20
	M 50	44,0 x 53,0	404453/M 50	9,0	42,0	55,0	-	2012550	10
	M 63	48,0 x 57,0	404857/M 63	10,0	46,0	65,0	-	2012563	5
tip 46	M 16	10,0 x 15,0	461015/M 16	6,0	8,5	17,0	16,0	2015516	50
okretna	M 16	13,0 x 18,0	461318/M 16	6,0	11,6	22,0	19,0	2015517	50
s	M 20	15,0 x 20,0	461520/M 20	6,0	13,8	24,0	24,0	2015520	50
vanjskim	M 20	17,0 x 22,0	461722/M 20	6,0	15,5	27,0	24,0	2015521	50
navojem	M 25	21,0 x 28,0	462128/M 25	7,0	19,1	32,0	29,0	2015525	20
Type 46	M 32	28,0 x 37,0	462837/M 32	8,0	26,5	41,0	39,0	2015532	20
turnable	M 40	37,0 x 46,0	463746/M 40	8,0	35,0	52,0	48,0	2015540	20
with	M 50	46,0 x 53,0	464453/M 50	9,0	42,0	60,0	55,0	2015550	10
external	M 63	48,0 x 57,0	464857/M 63	10,0	46,0	65,0	64,0	2015563	5
thread									

Cijev metalna ANACONDA SEALTITE E.F.

Metal Tube ANACONDA SEALTITE E.F.

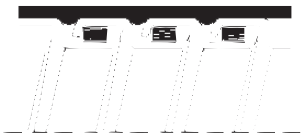

pravokutan, zabravljen profil
Square-locked profile

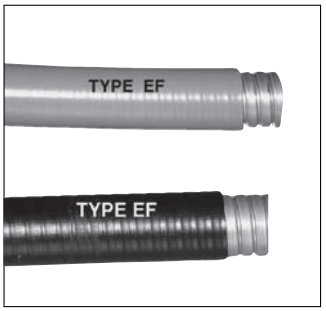

RoHS | EN 50086 | IP 67

Materijal:
cijev: čelik pocinčani
plašt: polivinilklorid PVC

Radna temperatura:
-25°C do 70°C
kratkotrajno: 90°C
UL: -20°C do 60°C

Boje/izvedbe/pakiranja:
- crna, siva
  (crna je preporučljiva za vanjske instalacije)

Pribor:
- odgovarajuće uvodnice: Anaconda ravna, kutna 45°, kutna 90°, ravni unutarnji navoj, kombinirana

Upotreba:
- izrada strojeva
- proizvodnja vlakova
- prehrambena industrija

Svojstva:
- spiralno motana metalna cijev
- pravokutan, zabravljen profil, brtvljen kudeljom do 1 1/4"
- termoplastični plašt (PVC smjesa bez olova od 1/4" do 1 1/4").
- potpuno zabravljen profil od 1 1/2"
- UL certifikat od 2 1/2"
- bez silikona i kadmija
- vrlo savitljiva
- visoka otpornost na pritisak

Material:
Tube: Galvanized steel
Sheath: Polyvinylchloride PVC

Temperature range:
-25°C to 70°C
short-term: 90°C
UL: -20°C to 60°C

Colour(s)/Designs:
- Black, grey
  (black is recommended for outdor installations)

Accessories:
- Suitable gland: Anaconda straight, 45° Angle, 90° Angle, straight internal thread, Combi

Applications:
- Machine building
- Railway Industries/Trainbuilding
- Food Industries

Characteristics:
- Coiled metal tube
- square-locked with cord packing till 1 1/4"
- thermoplastic cover (PVC-leadfree compound for the size 1/4" to 1 1/4")
- fully inter-locked profile from 1 1/2"
- UL approval from 2 1/2"
- free of silicone and cadmium
- very flexible
- high Compression resistance

2.2

NW NW	I-Ø mm I-Ø mm	A-Ø mm A-Ø mm	Polumjer savijanja statički mm Bending radius static mm	Polumjer savijanja dinamički mm Bending radius dynamic mm	Broj artikla siva Art. no. grey	Broj artikla crna Art. no. black	JP kolut m PU ring m
1/4"	6,4	11,5	40,0	50,0	0402142	0402141	50
5/16"	10,1	14,4	50,0	65,0	0402761	0402095	50
3/8"	12,6	17,8	60,0	85,0	0402389	0402834	75
1/2"	16,0	21,1	75,0	110,0	0402508	0402842	60
3/4"	21,0	26,4	90,0	140,0	0402753	0402885	50
1"	26,5	33,1	120,0	170,0	0402109	0402869	30
1 1/4"	35,1	41,8	135,0	215,0	0402125	0402877	30
1 1/2"	40,3	47,8	165,0	250,0	0402150	0402893	15
2"	51,6	59,9	210,0	300,0	0402206	0402907	15
2 1/2" UL	63,3	72,6	280,0	360,0	0402257	0402915	7,5
3" UL	78,4	88,4	425,0	520,0	0402303	0402923	7,5

Cijev metalna ANACONDA SEALTITE O.R.

Metal Tube ANACONDA SEALTITE O.R.

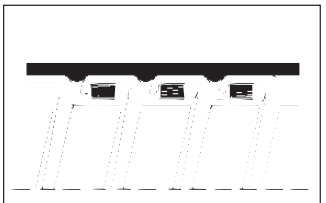

pravokutan, zabravljen profil
Square-locked profile

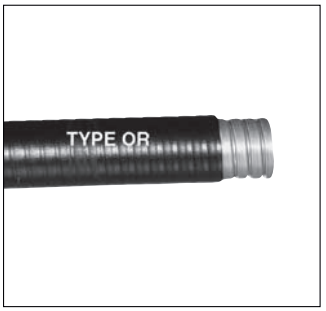

RoHS | EN 50086 | IP 67

2.2

Materijal:
cijev: čelik pocinčani
plašt: polivinilklorid PVC

Radna temperatura:
-15°C do 100°C
kratkotrajno: 120°C

Boje/izvedbe/pakiranja:
- crna

Svojstva:
- spiralno motana metalna cijev
- pravokutan, zabravljen profil, brtvljen kudeljom do 1 1/4"
- termoplastični plašt (PVC smjesa bez olova od 1/4" do 1 1/4")
- potpuno zabravljen profil od 1 1/2"
- plašt je vrlo otporan na ulja i maziva
- vrlo savitljiva
- visoka otpornost na pritisak
- bez silikona i kadmija

Pribor:
- odgovarajuće uvodnice: Anaconda ravna, kutna 45°, kutna 90°, ravni unutarnji navoj, kombinirana

Upotreba:
- izrada strojeva
- dieselski motori
- liftovi / dizala
- pokretne stepenice
- papirna, kemijska i petrokemijska industrija

Material:
Tube: Galvanized steel
Sheath: Polyvinylchloride PVC

Temperature range:
-15°C to 100°C
short-term: 120°C

Colour(s)/Designs:
- Black

Characteristics:
- Coiled metal tube
- Square-locked with cord packing till 1 1/4"
- Thermoplastic cover (PVC / leadfree compound for the size 1/4" till 1 1/4")
- fully inter-locked profile from 1 1/2"
- The cover is very good resistant against oil and greases.
- very flexible
- high Compression resistance
- free of silicone and cadmium

Accessories:
- Suitable gland: Anaconda straight, 45° Angle, 90° Angle, straight internal thread, Combi

Applications:
- machine-building industry
- diesel-engines
- Lifts/Elevators
- Escalator/Stairways
- Paper-, chemical- and petrochemical industries

NW NW	I-Ø mm I-Ø mm	A-Ø mm A-Ø mm	Polumjer savijanja statički mm Bending radius static mm	Polumjer savijanja dinamički mm Bending radius dynamic mm	Broj artikla crna Art. no. black	JP kolut m PU ring m
1/4"	6,4	11,5	40,0	50,0	0405344	50
5/16"	10,1	14,4	50,0	65,0	0405356	50
3/8"	12,6	17,8	60,0	85,0	0405388	75
1/2"	16,0	21,1	75,0	110,0	0405507	60
3/4"	21,0	26,4	90,0	140,0	0405752	50
1"	26,5	33,1	120,0	170,0	0405108	30
1 1/4"	35,1	41,8	135,0	215,0	0405124	30
1 1/2"	40,3	47,8	165,0	250,0	0405159	15
2"	51,6	59,9	210,0	300,0	0405205	15
2 1/2"	63,3	72,6	280,0	360,0	0405210	15
3"	78,4	88,4	425,0	520,0	0405531	7,5

Cijev metalna ANACONDA SEALTITE H.C.

Metal Tube ANACONDA SEALTITE H.C.

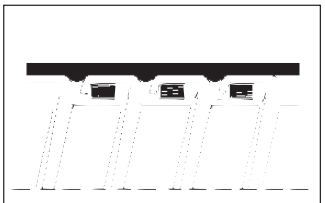

pravokutan, zabravljen profil
Square-locked profile

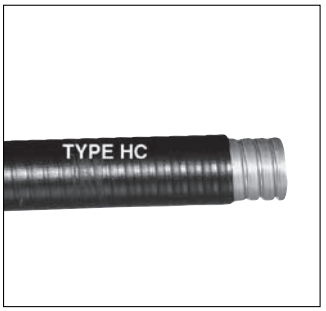

EN 50086 | IP 67

Materijal:
cijev: čelik pocinčani
plašt: polivinilklorid PVC

Radna temperatura:
-45°C do 105°C
kratkotrajno: 120°C

Boje/izvedbe/pakiranja:
- crna

Svojstva:
- spiralno motana metalna cijev
- pravokutan, zabravljen profil, brtvljen kudeljom do 1 1/4"
- termoplastični plašt (PVC smjesa)
- potpuno zabravljen profil od 1 1/2"
- veliki raspon radne temperature
- plašt je vrlo otporan na ulja i maziva
- vrlo savitljiva
- visoka otpornost na pritisak
- bez silikona i kadmija

Pribor:
- odgovarajuće uvodnice: Anaconda ravna, kutna 45°, kutna 90°, ravni unutarnji navoj, kombinirana

Upotreba:
- sustavi upozorenja za vlakove
- transformatori
- strojevi za obradu drveta
- pile
- sigurnosni sustavi u energetskim postrojenjima
- kemijska, keramička i građevinska industrija

Material:
Tube: Galvanized steel
Sheath: Polyvinylchloride PVC

Temperature range:
-45°C to 105°C
short-term: 120°C

Colour(s)/Designs:
- Black

Characteristics:
- Coiled metal tube
- square-locked with cord packing till 1 1/4"
- thermoplastic cover (PVC compound)
- fully inter-locked profile from 1 1/2"
- wide temperature range
- the cover is good resistant against oil and greases
- very flexible
- high Compression resistance
- free of silicone and cadmium

Accessories:
- Suitable gland: Anaconda straight, 45° Angle, 90° Angle, straight internal thread, Combi

Applications:
- train warning systems
- transformers
- wood cutting machines
- saw machines
- security systems in energy plants
- chemical-, ceramic- and building-industry

2.2

NW NW	I-Ø mm I-Ø mm	A-Ø mm A-Ø mm	Polumjer savijanja statički mm Bending radius static mm	Polumjer savijanja dinamički mm Bending radius dynamic mm	Broj artikla crna Art. no. black	JP kolut m PU ring m
1/4"	6,4	11,5	40,0	50,0	0404344	50
5/16"	10,1	14,4	50,0	65,0	0404350	50
3/8"	12,6	17,8	60,0	85,0	0404381	75
1/2"	16,0	21,1	75,0	110,0	0404500	60
3/4"	21,0	26,4	90,0	140,0	0404756	50
1"	26,5	33,1	120,0	170,0	0404101	30
1 1/4"	35,1	41,8	135,0	215,0	0404128	30
1 1/2"	40,3	47,8	165,0	250,0	0404152	15
2"	51,6	59,9	210,0	300,0	0404209	15
2 1/2"	63,3	72,6	280,0	360,0	0404250	7,5
3"	78,4	88,4	425,0	520,0	0404306	7,5

Cijev metalna ANACONDA SEALTITE H.C.X.

Metal Tube ANACONDA SEALTITE H.C.X.

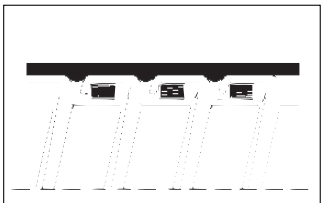

pravokutan, zabravljen profil
Square-locked profile

EN 50086 | IP 67

2.2

Materijal:
cijev: čelik pocinčani
plašt: termoplastični elastomer (TPE)

Radna temperatura:
-55°C do 145°C
kratkotrajno: 160°C

Boje/izvedbe/pakiranja:
- crna

Svojstva:
- spiralno motana metalna cijev
- pravokutan, zabravljen profil, brtvljen kudeljom do 1 1/4“
- posebni termoplastični plašt (termoplastični elastomer)
- potpuno zabravljen profil od 1 1/2"
- ekstremni raspon radne temperature
- vrlo savitljiva
- visoka otpornost na pritisak
- bez silikona i kadmija

Pribor:
- odgovarajuće uvodnice: Anaconda ravna, kutna 45°, kutna 90°, ravni unutarnji navoj, kombinirana

Upotreba:
- gradnja meteoroloških postaja
- Offshore tehnologija
- ljevaonice
- tehnologija za mjerenje i kontrolu

Material:
Tube: Galvanized steel
Sheath: thermoplastic elastomere (TPE)

Temperature range:
-55°C to 145°C
short-term: 160°C

Colour(s)/Designs:
- Black

Characteristics:
- Coiled metal tube
- square-locked with cord packing till 1 1/4"
- thermoplastic cover (TPE)
- fully inter-locked profile from 1 1/2"
- extreme temperature range
- very flexible
- high Compression resistance
- free of silicone and cadmium

Accessories:
- Suitable gland: Anaconda straight, 45° Angle, 90° Angle, straight internal thread, Combi

Applications:
- weather station building
- offshore technology
- foundries
- measurment and control technology

NW NW	I-Ø mm I-Ø mm	A-Ø mm A-Ø mm	Polumjer savijanja statički mm Bending radius static mm	Polumjer savijanja dinamički mm Bending radius dynamic mm	Broj artikla crna Art. no. black	JP kolut m PU ring m
3/8"	12,6	17,8	60,0	85,0	0407380	30
1/2"	16,0	21,1	75,0	110,0	0407500	30
3/4"	21,0	26,4	90,0	140,0	0407755	30
1"	26,5	33,1	120,0	170,0	0407100	30
1 1/4"	35,1	41,8	135,0	215,0	0407143	15
1 1/2"	40,3	47,8	165,0	250,0	0407127	15
2"	51,6	59,9	210,0	300,0	0407208	15

Cijev metalna ANACONDA SEALTITE H.F.X.

Metal Tube ANACONDA SEALTITE H.F.X.

pravokutan, zabravljen profil
Square-locked profile

RoHS | EN 50086 | IP 67

Materijal:
cijev: čelik pocinčani
plašt: poliuretan

Radna temperatura:
-45°C do 105°C
kratkotrajno: 125°C

Gorivost:
- prema NF F16-101

Boje/izvedbe/pakiranja:
- crna

Svojstva:
- spiralno motana metalna cijev
- pravokutan, zabravljen profil brtvljen kudeljom do 1 1/4"
- posebni termoplastični plašt (poliuretan)
- potpuno zabravljen profil od 1 1/2"
- bez halogena
- vrlo savitljiva
- plašt je vrlo otporan na ulja i maziva
- visoka otpornost na pritisak
- bez silikona i kadmija

Pribor:
- odgovarajuće uvodnice: Anaconda ravna, kutna 45°, kutna 90°, ravni unutarnji navoj, kombinirana

Upotreba:
- podzemne željeznice
- proizvodnja vlakova i autobusa
- u javnim građevinama (npr. aerodromi, tuneli, željezničke postaje
- brodogradnja
- dizala i pokretne stepenice

Material:
Tube: Galvanized steel
Sheath: Polyurethane

Temperature range:
-45°C to 105°C
short-term: 125°C

Inflammability:
- acc. to NF F16-101

Colour(s)/Designs:
- Black

Characteristics:
- Coiled metal tube
- square-locked with cord packing till 1 1/4“
- thermoplastic cover (Polyurethane)
- fully inter-locked profile from 1 1/2"
- free of halogen
- very flexible
- the cover is good resistant against oil and greases
- high Compression resistance
- free of silicone and cadmium

Accessories:
- Suitable gland: Anaconda straight, 45° Angle, 90° Angle, straight internal thread, Combi

Applications:
- subway
- train and bus-building industry
- in public buildings e.g. airports, tunnels and (subway) stations
- shipbuilding
- escalators/stairways

2.2

NW NW	I-Ø mm I-Ø mm	A-Ø mm A-Ø mm	Polumjer savijanja statički mm Bending radius static mm	Polumjer savijanja dinamički mm Bending radius dynamic mm	Broj artikla crna Art. no. black	JP kolut m PU ring m
1/4"	6,4	11,5	40,0	50,0	na upit	on request
5/16"	10,1	14,4	50,0	65,0	0408093	30
3/8"	12,6	17,8	60,0	85,0	0408115	30
1/2"	16,0	21,1	75,0	110,0	0408166	30
3/4"	21,0	26,4	90,0	140,0	0408212	30
1"	26,5	33,1	120,0	170,0	0408298	30
1 1/4"	35,1	41,8	135,0	215,0	0408360	15
1 1/2"	40,3	47,8	165,0	250,0	0408372	15
2"	51,6	59,9	210,0	300,0	0408380	15

Cijev metalna ANACONDA SEALTITE H.T.D.L.

Metal Tube ANACONDA SEALTITE H.T.D.L.

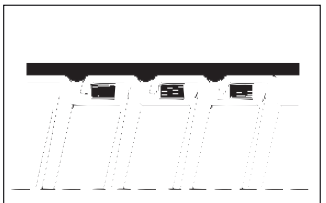

pravokutan, zabravljen profil
Square-locked profile

EN 50086 | IP 67 | UL-360 (file #E18917) CSA 22.2 (file 63790/15275)

2.2

Materijal:
cijev: čelik pocinčani sa integriranom bakrenom žicom za uzemljenje
plašt: polivinilklorid PVC

Radna temperatura:
-45°C do 105°C
kratkotrajno: 120°C

Boje/izvedbe/pakiranja:
- crna

Svojstva:
- spiralno motana metalna cijev
- pravokutan, zabravljen profil, brtvljen bakrom do 1 1/4"
- termoplastični plašt (PVC smjesa)
- potpuno zabravljen profil od 1 1/2"
- plašt je vrlo otporan na ulja i maziva
- vrlo savitljiva
- visoka otpornost na pritisak
- bez silikona i kadmija
- dobra EMC zaštita

Pribor:
- odgovarajuće uvodnice: Anaconda ravna, kutna 45°, kutna 90°, ravni unutarnji navoj, kombinirana

Upotreba:
- proizvodnja vlakova
- strojevi i tvornička postrojenja
- sklopna postrojenja
- transformatori
- papirna industrija

Material:
Tube: Galvanized steel with integrated grounding copper wire
Sheath: Polyvinylchloride PVC

Temperature range:
-45°C to 105°C
short-term: 120°C

Colour(s)/Designs:
- Black

Characteristics:
- Coiled metal tube
- square-locked with integral copper grounding wire till 1 1/4"
- thermoplastic cover (PVC compound)
- fully interlocked profile from 1 1/2"
- The cover is good resistant against oil and greases
- very flexible
- high Compression resistance
- free of silicone and cadmium
- good EMC shielding

Accessories:
- Suitable gland: Anaconda straight, 45° Angle, 90° Angle, straight internal thread, Combi

Applications:
- railway manufacturing
- machine- and plant engineering
- switching- and control installations
- transformators
- paper industry

NW NW	I-Ø mm I-Ø mm	A-Ø mm A-Ø mm	Polumjer savijanja statički mm Bending radius static mm	Polumjer savijanja dinamički mm Bending radius dynamic mm	Broj artikla crna Art. no. black	JP kolut m PU ring m
3/8"	12,6	17,8	70,0	85,0	0401382	60
1/2"	16,1	21,1	90,0	110,0	0401501	60
3/4"	21,1	26,4	115,0	140,0	0401757	45
1"	26,8	33,1	145,0	170,0	0401102	30
1 1/4"	35,4	41,8	175,0	215,0	0401129	15
1 1/2"	40,3	47,8	205,0	250,0	0401153	15
2"	51,6	59,9	240,0	300,0	0401200	15

Cijev plastična ANACONDA SEALTITE N.M.U.A.

Plastic Tube ANACONDA SEALTITE N.M.U.A.

Spiralno pojačani PVC
Spiral reinforced PVC

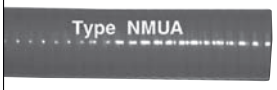

RoHS | EN 50086 | IP 67 | UL | CSA | UL- 1660, type B (file # E 211327) CSA C22.2 (file # 20817)

Materijal:
glatka iznutra i izvana
PVC plastična cijev sa integriranim plastičnim spiralnim ojačanjem.

Radna temperatura:
-20°C do 80°C
kratkotrajno: 100°C
CSA: -18°C do 75°C

Boje/izvedbe/pakiranja:
- siva

Svojstva:
- dobra savitljivost
- bez silikona i kadmija

Pribor:
- odgovarajuće uvodnice: Anaconda ravna, kutna 45°, kutna 90°, ravni unutarnji navoj, kombinirana

Upotreba:
- pogodna za vanjske i vlažne uvjete

Material:
Internal-external all-plastic smooth tube PVC with integrated plastic winding.

Temperature range:
-20°C to 80°C
short therm: 100°C
CSA: -18°C to 75°C

Colour(s)/Designs:
- Grey

Characteristics:
- good flexibility
- free of silicone and cadmium

Accessories:
- Suitable gland: Anaconda straight, 45° Angle, 90° Angle, straight internal thread, Combi

Applications:
- Suitable for outside and moist installation

2.2

NW NW	I-Ø mm I-Ø mm	A-Ø mm A-Ø mm	Polumjer savijanja statički mm Bending radius static mm	Polumjer savijanja dinamički mm Bending radius dynamic mm	Broj artikla siva Art. no. grey	JP kolut m PU ring m
3/8"	12,6	17,8	70,0	100,0	0413012	30
1/2"	16,0	21,1	100,0	135,0	0413016	30
3/4"	21,1	26,4	130,0	175,0	0413020	30
1"	26,8	33,1	180,0	220,0	0413026	30
1 1/4"	35,4	41,8	225,0	270,0	0413035	15
1 1/2"	40,3	47,8	255,0	320,0	0413040	15
2"	51,6	59,9	310,0	400,0	0413050	15

Cijev od nehrđajućeg čelika ANACONDA Multiflex U.I.

Stainless steel tube ANACONDA Multiflex U.I.

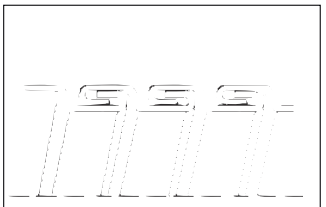

potpuno zabravljen profil
Interlocked profile

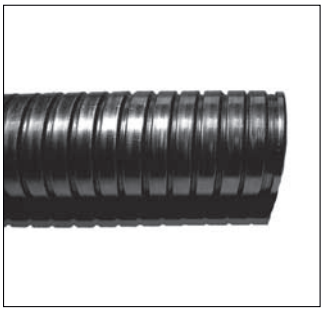

EN 50086 | IP 40

2.2

Materijal:
nehrđajući čelik

Radna temperatura:
-100°C do 600°C

Boje/izvedbe/pakiranja:
- boja metala

Svojstva:
- spiralno motana metalna cijev
- potpuno zabravljen profil (dvostruko presavijen)
- mehanički snažna i otporna na koroziju
- vrlo savitljiva
- extremna otpornost na pritisak i udarce
- izvrsna otpornost na toplinu i koroziju
- moguće torziono gibanje

Pribor:
- odgovarajuće uvodnice: Anaconda ravna, kutna 45°, kutna 90°, ravna s unutarnjim navojem, kombinirana
- tuljak za uzemljenje i stezni prsten
- cijevne uvodnice od nehrđajućeg čelika na upit

Upotreba:
- proizvodnja i prerada čelika i aluminija
- strojogradnja, robotika i proizvodnja aparata
- Offshore
- nadzorni i sigurnosni sustavi
- teška industrija

Material:
Stainless steel

Temperature range:
-100°C to 600°C

Colour(s)/Designs:
- Metal coloured

Characteristics:
- Coiled stainless steel tube
- Interlocked profile (double seamed)
- Mechanically strong and corrosion-resistant
- very flexible
- extremely compression and impact resistant
- excellent heat and corrosion-resistance
- torsion-able

Accessories:
- Suitable gland: Anaconda straight, 45° Angle, 90° Angle, straight internal thread, Combi
- Earthing sleeve and clamping ring
- stainless steel cable glands on request.

Applications:
- Steel and aluminium processing industry
- machine-, robotics and apparatus building
- offshore
- surveillance- and safety system
- heavy industry

NW NW	I-Ø mm I-Ø mm	A-Ø mm A-Ø mm	Polumjer savijanja statički mm Bending radius static mm	Polumjer savijanja dinamički mm Bending radius dynamic mm	Broj artikla nehrđajući čelik Art. no. Stainless steel	JP kolut m PU ring m
5/16"	9,5	12,5	50,0	60,0	0414786	30
3/8"	13,0	16,0	65,0	80,0	0414788	30
1/2"	17,0	21,0	75,0	100,0	0414800	30
3/4"	22,0	26,0	90,0	125,0	0414801	30
1"	26,0	30,0	120,0	160,0	0414802	30
1 1/4"	34,0	39,0	175,0	220,0	0414803	30
1 1/2"	40,0	45,0	230,0	280,0	0414804	15
2"	52,0	58,0	285,0	340,0	0414805	15

Cijev metalna ANACONDA Multiflex U.I.G.

Metal Tube ANACONDA Multiflex U.I.G.

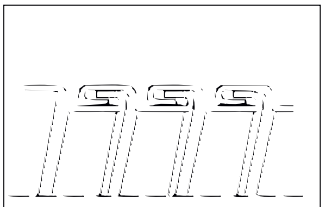

potpuno zabravljen profil
Inter-locked profile

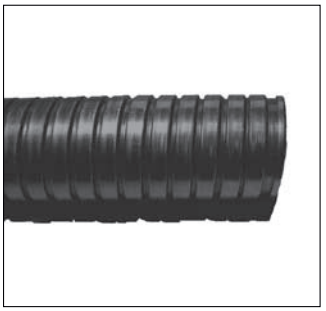

EN 50086 | IP 40

Materijal:
čelik pocinčani

Radna temperatura:
-55°C do 300°C

Boje/izvedbe/pakiranja:
- boja metala

Svojstva:
- spiralno motana cijev od pocinčanog čelika
- potpuno zabravljen profil (dvostruko presavijen)
- jaka mehanička otpornost
- srednje otporna na koroziju
- vrlo savitljiva
- ekstremno otporna na pritisak i udarce
- visoka otpornost na vrućinu
- moguće torziono gibanje

Pribor:
- odgovarajuće uvodnice: Anaconda ravna, kutna 45°, kutna 90°, ravna s unutarnjim navojem, kombinirana
- tuljak za uzemljenje
- stezni prsten

Upotreba:
- strojogradnja, robotika, proizvodnja aparata
- nadzorni i sigurnosni sustavi
- teška industrija

Material:
Galvanized steel

Temperature range:
-55°C to 300°C

Colour(s)/Designs:
- Metal coloured

Characteristics:
- Coiled galvanised steel tube
- Interlocked profile (double seamed)
- strong mechanical resistance
- middle corrosion-resistance
- very flexible
- extremely compression and impact resistant
- excellent heat resistance
- torsion-able

Accessories:
- Suitable gland: Anaconda straight, 45° Angle, 90° Angle, straight internal thread, Combi
- earthing sleeve
- clamping ring

Applications:
- machine-, robotics and apparatus building
- surveillance- and safety systems
- heavy industry

2.2

NW NW	I-Ø mm I-Ø mm	A-Ø mm A-Ø mm	Polumjer savijanja statički mm Bending radius static mm	Polumjer savijanja dinamički mm Bending radius dynamic mm	Broj artikla čelik Art. no. steel	JP kolut m PU ring m
5/16"	9,5	12,5	50,0	60,0	0414770	30
3/8"	13,0	16,0	65,0	80,0	0414771	30
1/2"	17,0	21,0	75,0	100,0	0414772	30
3/4"	22,0	26,0	90,0	125,0	0414773	30
1"	26,0	30,0	120,0	160,0	0414774	30
1 1/4"	34,0	39,0	175,0	220,0	0414775	30
1 1/2"	40,0	45,0	230,0	280,0	0414776	15
2"	52,0	58,0	285,0	340,0	0414777	15

Tuljak za uzemljenje sa steznim prstenom

za Multiflex U.I. / U.I.G.

Earthing sleeve with clamping ring

for Multiflex U.I. / U.I.G.

IP 40

Materijal:
mesing niklani

Radna temperatura:
-45°C do 250°C

Upotreba:
Tuljak za uzemljenje i stezni prsten zamjenjuju tuljak za uzemljenje i stezni prsten od poliamida na standardnim cijevnim uvodnicama zbog razlika unutarnjih i vanjskih promjera različitih sistema cijevi. Nivo zaštite za cijevnu uvodnicu je smanjen na IP 40.

Material:
nickel-plated brass

Temperature range:
-45°C to 250°C

Applications:
The earthing sleeve and the clamping ring replace the earthing sleeve and the polyamide clamping ring of the standard tube glands due to deviations of internal and external diameters of the various tube systems.
The protection class for the tube gland is reduced to IP 40.

2.2

NW NW	najmanji l-Ø mm smallest l-Ø mm	Broj artikla mesing niklani Art. no. nickel-plated brass	JP kom. PU pcs.
5/16"	6,8	2690196	10
3/8"	9,8	2690200	10
1/2"	13,9	2690212	10
3/4"	18,5	2690220	5
1"	22,8	2609974	5
1 1/4"	30,8	2690235	2
1 1/2"	36,8	2690240	2
2"	47,8	2690250	2

Uvodnica cijevna

za ANACONDA SEALTITE i Multiflex

Conduit gland

for ANACONDA SEALTITE and Multiflex

ravna / straight — kutna 45° / 45° Angle — kutna 90° / 90° Angle

IP 67

Materijal:
mesing niklani
brtveni prsten: poliamid bez halogena

Radna temperatura:
-45°C do 105°C
kombinirana: -40°C do 100°C

Boje/izvedbe/pakiranja:
- metalna boja
- nehrđajući čelik na upit
- PG/metrički navoj
- NPT navoj na upit
- ravna, kutna 45° i kutna 90°

Svojstva:
- *) uvodnice za cijevi 1/4", 5/16" i 1 1/2" **bez** UL/CSA odobrenja
- bez halogena
- visoka otpornost na izvlačenje
- besprijekorno uzemljenje
- jednostavna montaža

Pribor:
- tuljak za uzemljenje i stezni prsten potrebni za montažu sa Multiflex U.I./U.I.G.

Upotreba:
- za sve ANACONDA SEALTITE i Multiflex cijevi

Material:
nickel plated brass
sealing ring: halogenfree Polyamide

Temperature range:
-45°C to 105°C
Combi: -40°C to 100°C

Colour(s)/Designs:
- Metal coloured
- stainless steel on request
- PG/metric thread
- NPT thread on request
- straight, 45° and 90° angle

Characteristics:
- *) Glands for 1/4", 5/16" and 2 1/2" conduit **have no** UL/CSA approval
- Free of halogen
- high pull out strenght
- optimal grounding
- easy to assemble

Accessories:
- Earthing sleeve with clamping ring required for assembly with Multiflex U.I./U.I.G.)

Applications:
- for all ANACONDA SEALTITE and Multiflex conduits

2.2

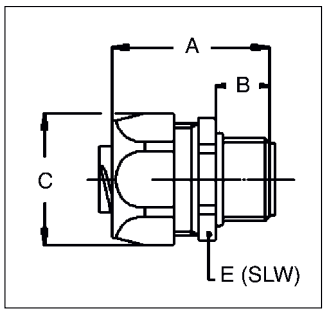

navoj / Thread	NW / NW	A mm / A mm	B mm / B mm	C mm / C mm	E SLW mm / E SLW mm	najmanji unutarnji-Ø mm / Min. Inner diameter mm	Broj artikla / Art. no.	JP kom. / PU pcs.
PG, ravna / PG straight								
PG 7	1/4" *)	33,0	10,0	22,0	20,0	5,2	2609507	10
PG 9	5/16" *)	35,0	12,0	26,0	24,0	8,3	2609509	10
PG 11	3/8"	35,0	12,0	26,0	24,0	10,2	2609511	10
PG 13,5	3/8"	35,0	12,0	26,0	24,0	10,2	2609513	10
PG 16	1/2"	37,0	13,0	29,0	27,0	13,9	2609516	10
PG 21	3/4"	40,0	15,0	35,0	33,0	18,5	2609521	5
PG 29	1"	46,0	15,0	45,0	43,0	23,8	2609529	5
PG 36	1 1/4"	52,0	16,0	54,0	52,0	31,8	2609536	2
PG 42	1 1/2"	56,0	18,0	63,0	60,0	36,8	2609542	2
PG 48	2"	66,0	20,0	77,0	74,0	47,8	2609548	2
metrički, ravna / metric straight								
M 12 x 1,5	1/4" *)	33,0	10,0	22,0	20,0	5,2	2609612	10
M 16 x 1,5	5/16" *)	35,0	12,0	26,0	24,0	8,3	2609615	10
M 16 x 1,5	3/8"	35,0	12,0	26,0	24,0	10,2	2609616	10
M 20 x 1,5	3/8"	36,0	13,0	26,0	24,0	10,2	2609617	10
M 20 x 1,5	1/2"	37,0	13,0	29,0	27,0	13,9	2609620	10
M 25 x 1,5	3/4"	40,0	15,0	35,0	33,0	18,5	2609625	5
M 32 x 1,5	1"	46,0	15,0	45,0	43,0	23,8	2609632	5
M 40 x 1,5	1 1/4"	52,0	16,0	54,0	52,0	31,8	2609640	2
M 50 x 1,5	1 1/2"	56,0	18,0	63,0	60,0	36,8	2609650	2
M 63 x 1,5	2"	66,0	20,0	77,0	74,0	47,8	2609663	2
M 75 x 1,5	2 1/2" *)	72,0	24,0	95,0	90,0	59,0	2609664	1

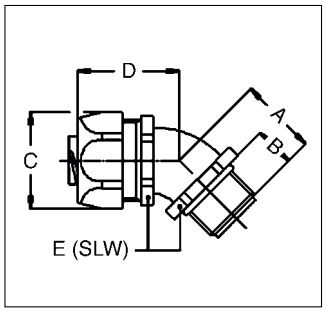

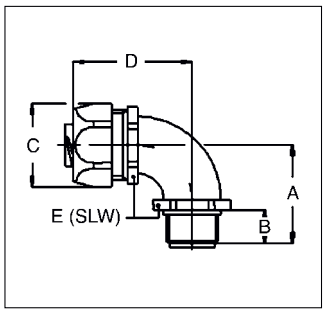

navoj Thread	NW NW	A/D mm A/D mm	B mm B mm	C mm C mm	E SLW mm E SLW mm	najmanji unutarnji-Ø mm Min. Inner diameter mm	Broj artikla Art. no.	JP kom. PU pcs.
PG, kutna 45° / PG 45° Angle								
PG 11	5/16"	23,0 / 33,0	12,0	26,0	22,0	8,3	2609570	10
PG 11	3/8"	23,0 / 33,0	12,0	26,0	22,0	10,2	2609571	10
PG 13,5	3/8"	23,0 / 33,0	12,0	26,0	22,0	10,2	2609573	10
PG 16	1/2"	25,0 / 33,0	13,0	29,0	27,0	13,9	2609576	10
PG 21	3/4"	30,0 / 36,0	15,0	35,0	33,0	18,5	2609581	5
PG 29	1"	34,0 / 46,0	15,0	45,0	42,0	23,8	2609589	5
PG 36	1 1/4"	39,0 / 54,0	16,0	54,0	51,0	31,8	2609590	2
PG 42	1 1/2"	45,0 / 59,0	18,0	63,0	60,0	36,8	2609592	2
PG 48	2"	53,0 / 71,0	20,0	77,0	74,0	47,8	2609598	2
metrički, kutna 45° / metric 45° Angle								
M 16 x 1,5	5/16"	23,0 / 33,0	12,0	26,0	22,0	8,3	2609915	10
M 16 x 1,5	3/8"	23,0 / 33,0	12,0	26,0	22,0	10,2	2609916	10
M 20 x 1,5	3/8"	23,0 / 33,0	12,0	26,0	22,0	10,2	2609917	10
M 20 x 1,5	1/2"	25,0 / 33,0	13,0	29,0	27,0	13,9	2609920	10
M 25 x 1,5	3/4"	30,0 / 36,0	15,0	35,0	33,0	18,5	2609925	5
M 32 x 1,5	1"	34,0 / 46,0	15,0	45,0	42,0	23,8	2609932	5
M 40 x 1,5	1 1/4"	39,0 / 54,0	16,0	54,0	51,0	31,8	2609940	2
M 50 x 1,5	1 1/2"	45,0 / 59,0	18,0	63,0	60,0	36,8	2609950	2
M 63 x 1,5	2"	53,0 / 71,0	20,0	77,0	74,0	47,8	2609951	2
PG, kutna 90° / PG 90° Angle								
PG 11	5/16"	32,0 / 42,0	12,0	26,0	22,0	8,3	2609710	10
PG 11	3/8"	32,0 / 42,0	12,0	26,0	22,0	10,2	2609711	10
PG 13,5	3/8"	32,0 / 42,0	12,0	26,0	22,0	10,2	2609713	10
PG 16	1/2"	36,0 / 43,0	13,0	29,0	27,0	13,9	2609716	10
PG 21	3/4"	43,0 / 48,0	15,0	35,0	33,0	18,5	2609721	5
PG 29	1"	48,0 / 59,0	15,0	45,0	42,0	23,8	2609729	5
PG 36	1 1/4"	57,0 / 68,0	16,0	54,0	51,0	31,8	2609736	2
PG 42	1 1/2"	63,0 / 78,0	18,0	63,0	60,0	36,8	2609742	2
PG 48	2"	74,0 / 96,0	20,0	77,0	74,0	47,8	2609748	2
metrički, kutna 90° / metric 90° Angle								
M 16 x 1,5	5/16"	32,0 / 42,0	12,0	26,0	22,0	8,3	2609815	10
M 16 x 1,5	3/8"	32,0 / 42,0	12,0	26,0	22,0	10,2	2609816	10
M 20 x 1,5	3/8"	32,0 / 42,0	12,0	26,0	22,0	10,2	2609817	10
M 20 x 1,5	1/2"	36,0 / 43,0	13,0	29,0	27,0	13,9	2609820	10
M 25 x 1,5	3/4"	43,0 / 48,0	15,0	35,0	33,0	18,5	2609825	5
M 32 x 1,5	1"	48,0 / 59,0	15,0	45,0	42,0	23,8	2609832	5
M 40 x 1,5	1 1/4"	57,0 / 68,0	16,0	54,0	51,0	31,8	2609840	2
M 50 x 1,5	1 1/2"	63,0 / 78,0	18,0	63,0	60,0	36,8	2609850	2
M 63 x 1,5	2"	74,0 / 96,0	20,0	77,0	74,0	47,8	2609863	2

Svojstva:
uvodnice bez UL/CSA odobrenja

Characteristics:
Glands without UL/CSA approval

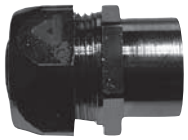

ravni unutarnji navoj
straight internal thread

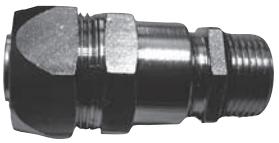

kombinirana
Combi

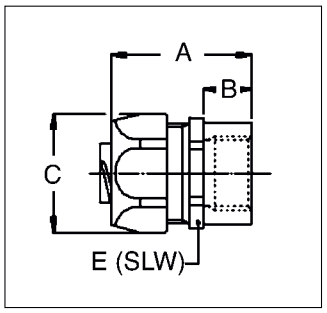

navoj Thread	NW NW	A mm A mm	B mm B mm	C mm C mm	E SLW mm E SLW mm	najmanji unutarnji-Ø mm Min. Inner diameter mm	Broj artikla Art. no.	JP kom. PU pcs.
PG, ravna sa unutarnjim navojem / PG straight with internal thread								
PG 11	5/16"	35,0	12,0	26,0	24,0	8,3	2609470	10
PG 11	3/8"	35,0	12,0	26,0	24,0	10,2	2609471	10
PG 13,5	3/8"	35,0	12,0	26,0	24,0	10,2	2609473	10
PG 16	1/2"	37,0	13,0	29,0	27,0	13,9	2609476	10
PG 21	3/4"	40,0	15,0	35,0	33,0	18,5	2609481	5
PG 29	1"	46,0	15,0	45,0	43,0	23,8	2609489	5
PG 36	1 1/4"	52,0	16,0	54,0	52,0	31,8	2609490	2
PG 42	1 1/2"	56,0	18,0	63,0	60,0	36,8	2609492	2
PG 48	2"	66,0	20,0	77,0	74,0	47,8	2609498	2
metrički, ravna sa unutarnjim navojem / metric straight with internal thread								
M 16 x 1,5	5/16"	35,0	12,0	26,0	24,0	8,3	2609879	10
M 16 x 1,5	3/8"	35,0	12,0	26,0	24,0	10,2	2609880	10
M 20 x 1,5	1/2"	37,0	13,0	29,0	27,0	13,9	2609882	10
M 25 x 1,5	3/4"	40,0	15,0	35,0	33,0	18,5	2609885	5
M 32 x 1,5	1"	46,0	15,0	45,0	43,0	23,8	2609892	5
M 40 x 1,5	1 1/4"	52,0	16,0	54,0	52,0	31,8	2609894	2
M 50 x 1,5	1 1/2"	56,0	18,0	63,0	60,0	36,8	2609895	2
M 63 x 1,5	2"	66,0	20,0	77,0	74,0	47,8	2609899	2

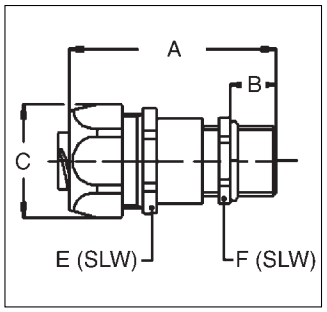

navoj Thread	NW NW	A mm A mm	B mm B mm	C mm C mm	E/F SLW mm E/F SLW mm	za kabel promjera mm Clamping range mm	Broj artikla Art. no.	JP kom. PU pcs.
PG, kombinirana / PG Combi								
PG 9	5/16"	55,0	10,0	26,0	24 / 17	4,0 - 8,0	2609689	10
PG 9	3/8"	55,0	10,0	26,0	24 / 20	5,0 - 8,3	2609691	10
PG 11	3/8"	55,0	10,0	26,0	24 / 20	5,0 - 10,2	2609692	10
PG 13,5	1/2"	57,0	10,0	29,0	27 / 22	6,0 - 12,0	2609693	10
PG 16	1/2"	60,0	10,0	29,0	27 / 24	10,0 - 13,9	2609694	10
PG 21	3/4"	67,0	12,0	35,0	33 / 30	13,0 - 18,0	2609695	5
PG 29	1"	80,0	12,0	45,0	43 / 40	18,0 - 23,8	2609696	5
metrički, kombinirana / metric Combi								
M 16 x 1,5	5/16"	57,0	12,0	26,0	24 / 18	4,0 - 8,0	2609775	10
M 16 x 1,5	3/8"	57,0	12,0	26,0	24 / 18	4,0 - 8,0	2609776	10
M 20 x 1,5	3/8"	57,0	12,0	26,0	24 / 22	6,0 - 10,2	2609777	10
M 20 x 1,5	1/2"	59,0	12,0	29,0	27 / 22	6,0 - 12,0	2609780	10
M 25 x 1,5	1/2"	62,0	12,0	29,0	27 / 27	10,0 - 13,9	2609784	5
M 32 x 1,5	3/4"	70,0	15,0	35,0	33 / 34	13,0 - 18,0	2609788	5
M 40 x 1,5	1"	83,0	15,0	45,0	43 / 43	18,0 - 23,8	2609795	2

Uvodnica cijevna COMPACT

za ANACONDA SEALTITE

Conduit gland COMPACT

for ANACONDA SEALTITE

ravna / straight — kutna 90° / 90° Angle — zakrenuta / turned

IP 67

2.2

Materijal:
mesing niklani
brtveni prsten: PA6
O-brtva: NBR

Radna temperatura:
-45°C do 105°C

Boje/izvedbe/pakiranja:
- metalna boja
- metrički navoj
- PG navoj na upit
- ravna, kutna 90° i zakrenuta

Svojstva:
- bez halogena
- visoka otpornost na izvlačenje
- besprijekorno uzemljenje
- jednostavna montaža

Upotreba:
- za sve ANACONDA SEALTITE cijevi, isključujući CNP, gdje se ne zahtjeva UL/CSA

Material:
nickel plated brass
sealing ring: PA6
o-ring: NBR

Temperature range:
-45°C to 105°C

Colour(s)/Designs:
- Metal coloured
- metric thread
- PG thread on request
- straight, 90° angle and turned

Characteristics:
- Free of halogen
- high pull out strenght
- optimal grounding
- easy to assemble

Applications:
- for all ANACONDA SEALTITE conduits where no UL/CSA is required

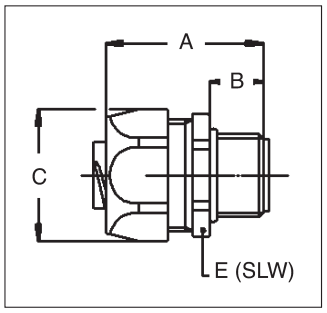

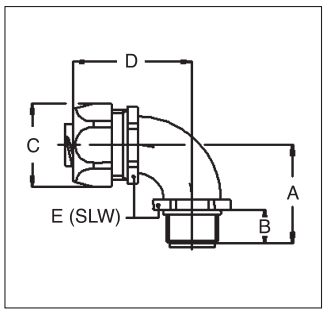

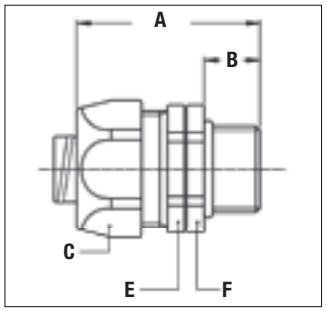

Navoj / Thread	NW / NW	A mm / A mm	B mm / B mm	C mm / C mm	D mm / D mm	E mm / E mm	F mm / F mm	najmanji unutarnji-Ø mm / Min. Inner diameter mm	Broj artikla / Art. no.	JP kom. / PU pcs.
metrička ravna / metric straight										
M 16 x 1,5	3/8"	30,0	10,0	26,0		24,0		10,4	2612001	10
M 20 x 1,5	3/8"	30,0	10,0	26,0		24,0		10,4	2612002	10
M 20 x 1,5	1/2“	32,0	10,0	29,0		27,0		13,8	2612003	10
M 25 x 1,5	3/4“	33,0	10,0	35,0		33,0		18,5	2612004	5
M 32 x 1,5	1"	36,0	12,0	45,0		44,0		23,8	2612005	5
M 40 x 1,5	1 1/4"	40,0	13,0	53,0		50,0		31,9	2612006	2
M 50 x 1,5	1 1/2"	46,0	14,0	62,0		58,0		36,9	2612007	2
M 63 x 1,5	2"	52,0	16,0	76,0		72,0		47,9	2612008	2
metrička 90° / metric 90°										
M 16 x 1,5	3/8"	26,0	10,0	26,0	31,0	22,0		10,4	2612013	10
M 20 x 1,5	3/8"	26,0	10,0	26,0	32,0	24,0		10,4	2612014	10
M 20 x 1,5	1/2"	28,0	10,0	29,0	34,0	27,0		13,8	2612015	10
M 25 x 1,5	3/4"	32,0	10,0	35,0	40,0	33,0		18,5	2612016	5
M 32 x 1,5	1"	40,0	12,0	45,0	49,0	42,0		23,8	2612017	5
M 40 x 1,5	1 1/4"	46,0	13,0	53,0	50,0	52,0		31,9	2612018	2
M 50 x 1,5	1 1/2"	56,0	14,0	62,0	57,0	62,0		36,9	2612019	2
M 63 x 1,5	2"	62,0	16,0	76,0	68,0	72,0		47,9	2612020	2
zakrivljena / turned										
M 16 x 1,5	5/16"	48,0	10,0	26,0		24,0	21,0	8,3	2612023	10
M 20 x 1,5	3/8"	48,0	10,0	26,0		24,0	21,0	10,4	2612024	10
M 20 x 1,5	1/2"	49,0	10,0	29,0		27,0	25,0	13,8	2612025	10
M 25 x 1,5	3/4"	49,0	10,0	35,0		33,0	31,0	17,4	2612026	5
M 32 x 1,5	1"	55,0	12,0	45,0		42,0	38,0	23,4	2612027	5
M 40 x 1,5	1 1/4"	58,0	14,0	54,0		50,0	48,0	29,4	2612028	2
M 50 x 1,5	1 1/2"	65,0	14,0	62,0		58,0	55,0	36,9	2612029	2
M 63 x 1,5	2"	74,0	16,0	76,0		72,0	68,0	47,9	2612030	2

Plastična spiralna traka

Plastic spiral binding

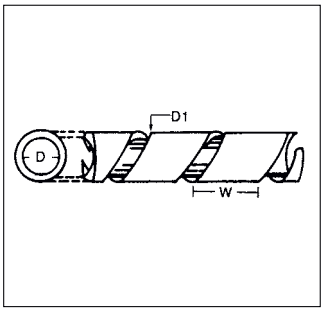

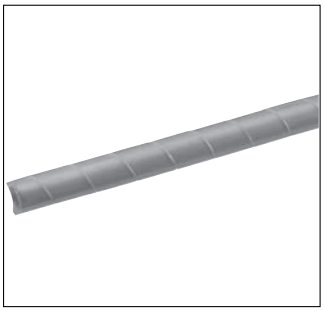

RoHS

Materijal:
polietilen PE

Radna temperatura:
-40°C do 85°C

Boje/izvedbe/pakiranja:
- crna
- prozirna

Material:
Polyethylene PE

Temperature range:
-40°C to 85°C

Colour(s)/Designs:
- Black
- Transparent

2.2

tip Type	D mm D mm	debljina D1 mm Thickness D1 mm	širina W mm Width W mm	Ø paketa mm Ø Bundle mm	Broj artikla transparentna Art. no. transparent	Broj artikla crna Art. no. black	JP m PU m
SB - 6	5,0	6,0	7,0	4,0 - 50,0	1800206	1800256	10
SB - 8	7,0	8,0	10,8	6,0 - 60,0	1800208	1800258	10
SB - 10	8,5	10,0	11,4	7,5 - 60,0	1800210	1800260	10
SB - 12	10,2	12,0	13,9	9,0 - 65,0	1800212	1800262	10
SB - 15	13,0	15,0	15,0	12,0 - 70,0	1800215	1800265	10
SB - 19	16,4	19,0	18,2	15,0 - 100,0	1800219	1800269	10
SB - 24	21,0	24,0	19,6	20,0 - 130,0	1800224	1800274	10

2.2

Razdjelnici + zaštitni pokrovi za utikače

Manifolds + Connector Interfaces

	stranica		page
Pregled razdjelnika	94 - 95	**Overview Manifolds**	94 - 95
A-razdjelnici	96	A-manifolds	96
T-razdjelnici	97 - 99	T-manifolds	97 - 99
T-specijalni razdjelnici	100	T-Special Manifolds	100
Y-razdjelnici	101 - 102	Y-manifolds	101 - 102
V-razdjelnici	103	V-manifolds	103
M-razdjelnici	104	M-manifolds	104
Pregled zaštitnih pokrova za utikače	105	**Overview Connector interfaces**	105
Zaštitni pokrovi za utikače	106 - 110	Connector interfaces	106 - 110
Kutni komad	110	Angle piece	110

Pregled razdjelnika/Overview Manifolds

Razdjelnici s vanjskim obuhvatom/outside gripping Manifolds

A-razdjelnik/A-Manifold

zabravljivanje obuhvatom/clamp-lock

oblik A / Form A

zabravljivanje obuhvatom/clamp-lock

oblik B / Form B

T-razdjelnik/T-Manifold

zabravljivanje zupcima/snap-lock

oblik A / Form A

zabravljivanje obuhvatom/clamp-lock

oblik B / Form B

zabravljivanje obuhvatom/clamp-lock

oblik C / Form C

zabravljivanje obuhvatom/clamp-lock

oblik D / Form D

V-razdjelnik/V-Manifold

zabravljivanje zupcima/snap-lock

oblik A / Form A

zabravljivanje obuhvatom/clamp-lock

oblik B / Form B

Y-razdjelnik/Y-Manifold

zabravljivanje zupcima/snap-lock

oblik A / Form A

zabravljivanje zupcima/snap-lock

oblik B / Form B

zabravljivanje obuhvatom/clamp-lock

oblik C / Form C

zabravljivanje obuhvatom/clamp-lock

oblik D / Form D

M-razdjelnik/M-Manifold

zabravljivanje obuhvatom/clamp-lock

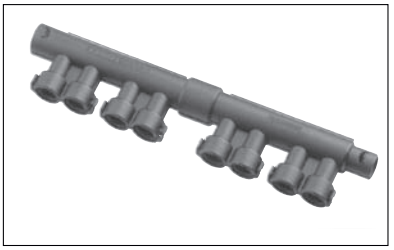

Pregled razdjelnika/Overview Manifolds

Razdjelnici s unutarnjim obuhvatom/Inside gripping Manifolds

Primjenjivi samo sa zatvorenim rebrastim cijevima/Only applicable with unslit corrugated tubes

T-razdjelnik/T-Manifold

mit zabravljivanje zupcima/with snap-lock

M-razdjelnik/M-Manifold

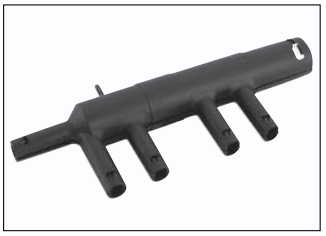

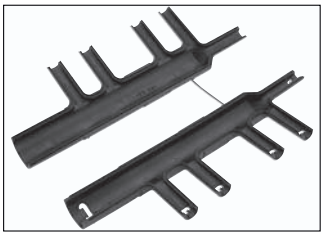

2.3

Kanalice izrađene po narudžbi/Customized Cable Ducts

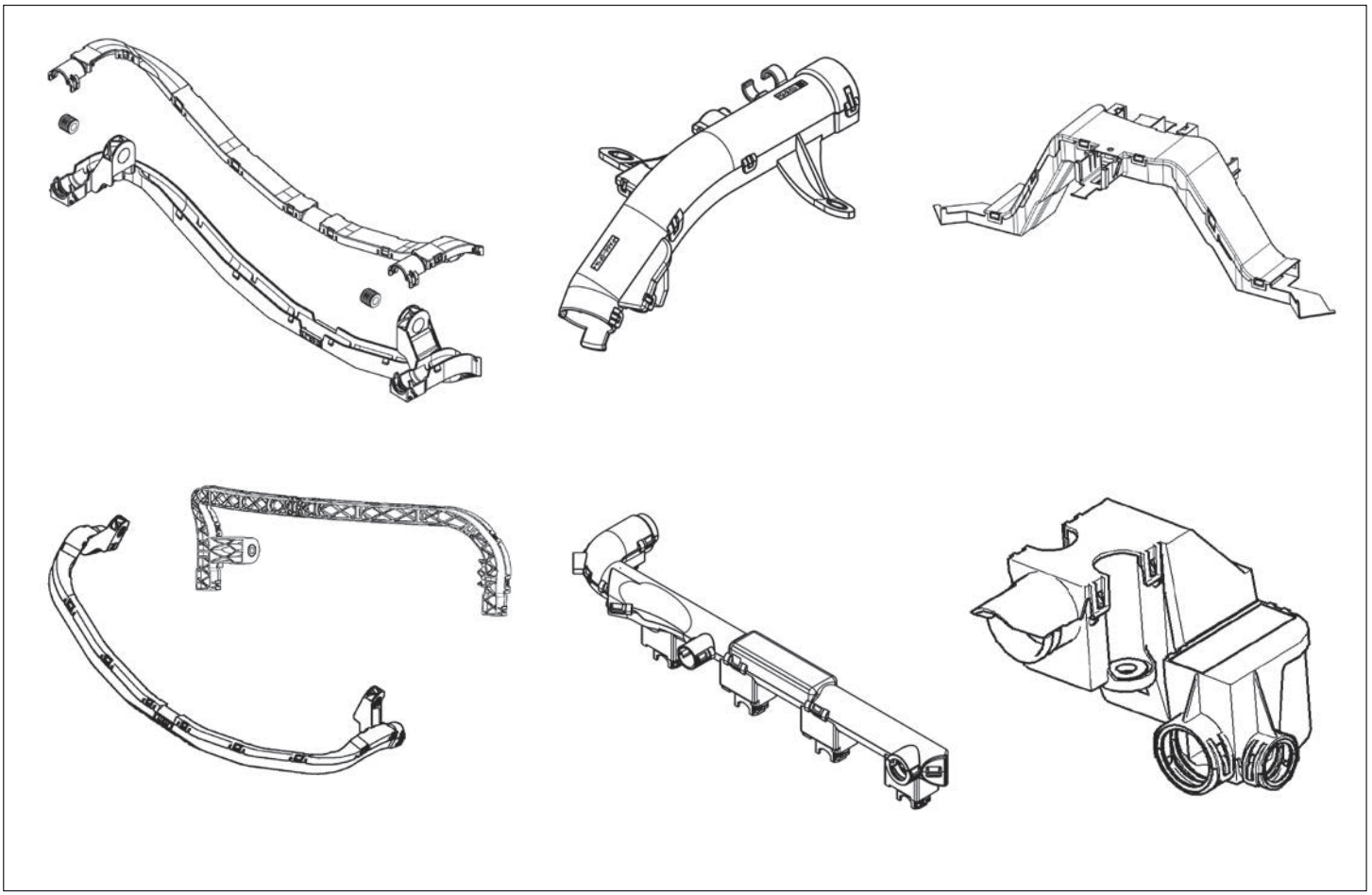

A-razdjelnici

A-Manifolds

oblik A / Form A

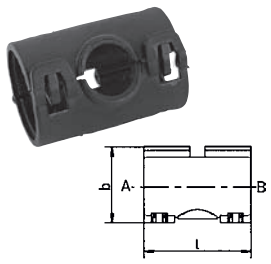

oblik B / Form B

RoHS

Materijal:
poliamid 66
poliamid 46 na upit

Radna temperatura:
-40°C do 135°C
500 h: -40°C do 150°C

Boje/izvedbe:
• crna

Material:
Polyamide 66
Polyamide 46 on request

Temperature range:
-40°C to 135°C
500 h: -40°C to 150°C

Colour(s)/Designs:
• Black

specijalni razdjelnik
Special manifold

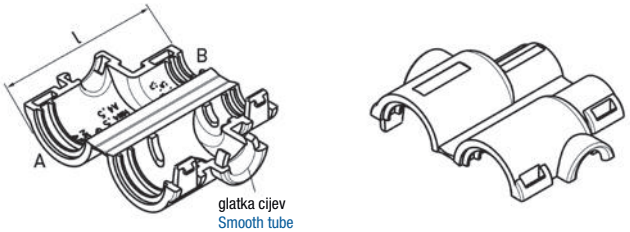

2.3

oblik Form	obuhvat izvana outside gripping	zabravljivanje obuhvatom Clamp lock	unutarnji graničnik za cijev stop ridge for corrugated tube inside	odgovara za profil rebraste cijevi NW (A-B) standardni +UFW suitable for corrugated tube profile NW (A-B) normal +UFW	AHW AHW	samo-zatvarajući L-Profil self closing L-Profile	zabravljujući V-Profil lockable V-Profile	b mm b mm	l mm l mm	broj artikla Art. no.	JP kom. PU pcs.
A	✓	✓	✓	4,5	4,5	4,5		14,4	26,0	9810045	2000
A	✓	✓	✓	7,5	6	7,5		17,2	26,0	9810075	1000
A	✓	✓	✓	10	8,5	10	8,5	20,2	27,9	9810100	1000
A	✓	✓	✓	13	11	13	11	23,1	29,5	9810130	1000
A	✓	✓	✓	17	15		15	28,4	29,5	9810170	1000
A	✓	✓	✓	22	19		19	32,9	29,5	9810220	1500
A	✓	✓	✓	26	26		26	38,8	29,5	9810260	500
B	✓	✓		7,5 - 4,5	6 - 4,5	7,5 - 4,5		17,2	28,0	9810375	1000
B	✓	✓		10 - 7,5	8,5 - 6	10 - 7,5		20,2	32,0	9810400	1000
B	✓	✓		13 - 10	11 - 8,5	13 - 10	11 - 8,5	23,1	35,5	9810430	1000
B	✓	✓		17 - 13	15 - 11		15 - 11	28,4	39,5	9810470	1000
B	✓	✓		22 - 17	19 - 15		19 - 15	32,9	39,5	9810520	500
B	✓	✓		26 - 22	26 - 19		26 - 19	38,8	39,5	9810560	500
specijalni Special	✓	✓	✓	10 - 4,5		10 - 4,5			32,0	9810110	1000

T-razdjelnici

T-Manifolds

RoHS

Materijal:
poliamid 66
poliamid 46 na upit

Radna temperatura:
-40°C do 135°C
500 h: -40°C do 150°C

Boje/izvedbe:
• crna

Material:
Polyamide 66
Polyamide 46 on request

Temperature range:
-40°C to 135°C
500 h: -40°C to 150°C

Colour(s)/Designs:
• Black

oblik A / Form A

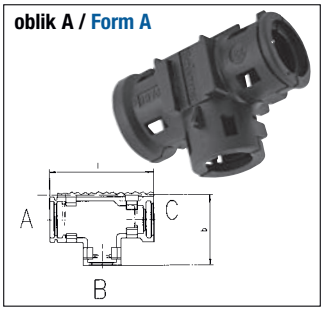

oblik B / Form B

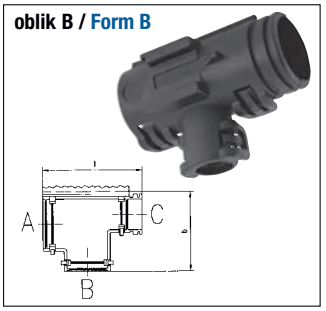

oblik C / Form C

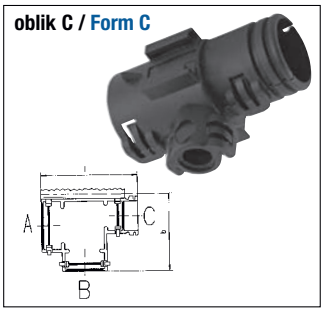

oblik D / Form D

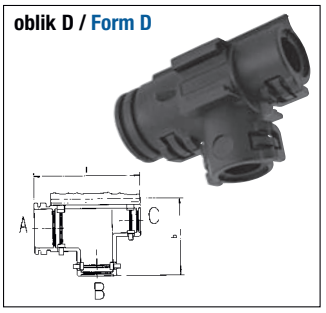

oblik	obuhvat izvana	zabravljivanje zupcima	zabravljivanje obuhvatom	klizno umetanje na postolje	vanjsko hvatište na grani C	odgovara za profil rebraste cijevi NW (A-B-C) standardni +UFW	AHW	samo-zatvarajući L-Profil	zabravljujući V-Profil	b mm	l mm	broj artikla	JP kom.
Form	outside gripping	Snap lock	Clamp lock	Plug socket slide in	exterior hook-up on branch C	suitable for corrugated tube profile NW (A-B-C) normal +UFW	AHW	self closing L-Profile	lockable V-Profile	b mm	l mm	Art. no.	PU pcs.
A	✓	✓		✓		7,5-7,5-7,5	6-6-6	7,5-7,5-7,5		24,7	33,4	9806082	500
A	✓	✓		✓		8,5-8,5-10		8,5-8,5-10		27,2	37,6	9806088	500
A	✓	✓		✓		10-7,5-7,5	8,5-6-6	10-7,5-7,5		24,7	36,0	9806087	500
A	✓	✓		✓		10-8,5-10		10-8,5-10		26,9	37,5	9806086	500
A	✓	✓		✓		10-10-7,5	8,5-8,5-6	10-10-7,5		26,8	38,5	9806097	500
A	✓	✓		✓		10-10-10	8,5-8,5-8,5	10-10-10	8,5-8,5-8,5	26,7	39,2	9806089	500
A	✓	✓		✓		13-7,5-13	11-6-11	13-7,5-13		30,9	35,8	9806092	500
A	✓	✓		✓		13-10-10	11-8,5-8,5	13-10-10	11-8,5-8,5	29,1	38,9	9806091	500
A	✓	✓		✓		13-13-7,5	11-11-6	13-13-7,5		30,3	41,5	9806093	500
A	✓	✓		✓		17-7,5-17	15-6-15	17-7,5-17		34,6	37,5	9806095	500
A	✓	✓		✓		17-10-17	15-8,5-15	17-10-17	15-8,5-15	35,8	40,5	9806094	500
A	✓	✓		✓		17-13-13	15-11-11	17-13-13	15-11-11	34,6	43,2	9806096	500
A	✓	✓		✓		17-17-7,5	15-15-6	17-17-7,5		39,5	48,9	9806099	250
B	✓		✓	✓		4,5-4,5-4,5	4,5-4,5-4,5	4,5-4,5-4,5		24,1	30,0	9806162	500
B	✓		✓	✓	✓	7,5-4,5-7,5	6-4,5-6	7,5-4,5-7,5		25,7	36,6	9806081	500
B	✓		✓	✓		7,5-7,5-4,5	6-6-4,5	7,5-7,5-4,5		33,2	25,7	9806168	500
B	✓		✓	✓	✓	7,5-7,5-7,5	6-6-6	7,5-7,5-7,5		26,1	39,2	9806083	500
B	✓		✓	✓	✓	7,5-10-7,5	6-8,5-6	7,5-10-7,5		26,1	42,4	9806180	250
B	✓		✓	✓	✓	8,5-8,5-8,5		8,5-8,5-8,5		29,0	43,4	9806133	500
B	✓		✓	✓	✓	8,5-8,5-10		8,5-8,5-10		28,5	41,1	9806079	500
B	✓		✓	✓	✓	10-4,5-7,5	8,5-4,5-6	10-4,5-7,5		33,7	50,8	9806197	500
B	✓		✓	✓	✓	10-4,5-10	8,5-4,5-8,5	10-4,5-10		28,7	36,6	9806105	500
B	✓		✓	✓		10-7,5-4,5	8,5-6-4,5	10-7,5-4,5		44,0	33,7	9806170	500
B	✓		✓	✓	✓	10-7,5-10	8,5-6-8,5	10-7,5-10		28,7	39,4	9806111	500

oblik	obuhvat izvana	zabravlji-vanje obuhvatom	klizno umetanje na postolje	vanjsko hvatište na grani C	glatki	odgovara za profil rebraste cijevi NW (A-B-C) standardni +UFW	AHW	samo-zatvarajući L-Profil	zabravlju-jući V-Profil	b mm	l mm	broj artikla	JP kom.
Form	outside gripping	Clamp lock	Plug socket slide in	exterior hook-up on branch C	smooth	suitable for corrugated tube profile NW (A-B-C) normal +UFW	AHW	self closing L-Profile	lockable V-Profile	b mm	l mm	Art. no.	PU pcs.
B	✓	✓	✓			10-10-4,5	8,5-8,5-4,5	10-10-4,5		33,7	44,6	9806169	500
B	✓	✓	✓	✓		10-10-7,5	8,5-8,5-6	10-10-7,5		28,7	42,4	9806160	500
B	✓	✓	✓	✓		10-10-10	8,5-8,5-8,5	10-10-10	8,5-8,5-8,5	28,8	42,4	9806138	500
B	✓	✓	✓	✓		13- 4,5-13	11-4,5-11	13-4,5-13		53,0	36,6	9806307	500
B	✓	✓	✓	✓		13-7,5-13	11-6-11	13-7,5-13		31,7	40,1	9806158	500
B	✓	✓	✓	✓		13-8,5-10		13-8,5-10			52,3	9806175	500
B	✓	✓	✓			13-10-4,5	11-8,5-4,5	13-10-4,5		46,1	36,6	9806171	500
B	✓	✓	✓	✓		13-10-7,5	11-8,5-6	13-10-7,5	11-8,5-6	52,3	36,6	9806172	500
B	✓	✓	✓	✓		13-10-13	11-8,5-11	13-10-13	11-8,5-11	31,6	43,6	9806101	500
B	✓	✓	✓	✓		13-13-7,5	11-11-6	13-13-7,5		31,6	45,3	9806159	500
B	✓	✓	✓	✓		13-13-10	11-11-8,5	13-13-10	11-11-8,5	31,6	45,3	9806104	500
B	✓	✓	✓	✓		17-4,5-17	15-4,5-15	17-4,5-17		40,8	37,0	9806161	500
B	✓	✓	✓	✓		17- 7,5-13	15-6-11	17-7,5-13		36,9	41,0	9806100	500
B	✓	✓	✓	✓		17-7,5-17	15-6-15	17-7,5-17		37,0	40,8	9806137	500
B	✓	✓	✓	✓		17-10-13	15-8,5-11	17-10-13	15-8,5-11	36,9	43,6	9806107	500
B	✓	✓	✓	✓		17-10-17	15-8,5-15	17-10-17	15-8,5-15	37,0	43,8	9806136	500
B	✓	✓	✓	✓		17-13-13	15-11-11	17-13-13	15-11-11	36,9	46,0	9806166	500
B	✓	✓	✓	✓		17-13-17	15-11-15	17-13-17	15-11-15	36,3	50,1	9806141	250
B	✓	✓	✓	✓		17-17-7,5	15-15-6	17-17-7,5		36,9	50,6	9806167	500
B	✓	✓		✓		17-22-17	15-19-15		15-19-15	39,3	59,9	9806135	250
B	✓	✓		✓		22-4,5-22	19-4,5-19			37,7	41,4	9806106	500
B	✓	✓		✓		22-7,5-22	19-6-19			41,4	39,5	9806113	500
B	✓	✓		✓		22-8,5-22				47,0	66,4	9806149	500
B	✓	✓		✓		22-10-10	19-8,5-8,5		19-8,5-8,5	47,0	66,3	9806143	500
B	✓	✓		✓		22-10-17	19-8,5-15		19-8,5-15	47,0	67,7	9806179	500
B	✓	✓		✓		22-10-22	19-8,5-19		19-8,5-19	41,5	42,5	9806121	500
B	✓	✓		✓	✓	22-10-22	19-8,5-19		19-8,5-19	66,4	47,0	9806164	100
B	✓	✓		✓		22-13-17	19-11-15		19-11-15	41,4	46,7	9806114	250
B	✓	✓		✓		22-13-22	19-11-19		19-11-19	41,4	46,4	9806108	500
B	✓	✓	✓	✓		22-17-13	19-15-11		19-15-11	41,9	51,3	9806103	250
B	✓	✓	✓	✓		22-22-10	19-19-8,5		19-19-8,5			9806178	250
B	✓	✓		✓		22-22-13	19-19-11		19-19-11	43,8	58,5	9806142	250
B	✓	✓		✓		22-22-22	19-19-19		19-19-19	42,4	56,2	9806102	250
B	✓	✓		✓	✓	22-22-22	19-19-19		19-19-19	66,4	47,0	9806165	500
B	✓	✓		✓		22-26-17	19-26-15		19-26-15	42,5	57,0	9806184	250
B	✓	✓		✓		22-29-26				48,5	60,0	9806182	250
B	✓	✓		✓		26-4,5-22	26-4,5-19			53,0	72,3	9806153	100
B	✓	✓		✓		26-4,5-26	26-4,5-26			53,0	73,0	9806144	500
B	✓	✓		✓		26-7,5-22	26-6-19			53,0	72,3	9806156	500
B	✓	✓		✓		26-7,5-26	26-6-26			53,0	73,0	9806177	500
B	✓	✓		✓		26-8,5-26				53,0	73,0	9806145	500
B	✓	✓		✓		26-10-26	26-8,5-26		26-8,5-26	47,6	45,1	9806129	500
B	✓	✓		✓		26-13-13	26-11-11		26-11-11	53,0	72,9	9806140	500
B	✓	✓		✓		26-13-22	26-11-19		26-11-19	53,0	72,3	9806148	500
B	✓	✓		✓		26-13-26	26-11-26		26-11-26	53,0	73,0	9806147	500
B	✓	✓		✓		26-17-17	26-15-15		26-15-15	49,0	52,5	9806109	250
B	✓	✓		✓		26-17-22	26-15-19		26-15-19	47,3	50,7	9806119	500
B	✓	✓		✓		26-17-26	26-15-26		26-15-26	53,0	73,0	9806146	500
B	✓	✓		✓		26-22-22	26-19-19		26-19-19	47,3	55,2	9806112	250
B	✓	✓		✓		26-26-10	26-26-8,5		26-26-8,5	53,0	72,2	9806174	250
B	✓	✓		✓		26-26-13	26-26-11		26-26-11	53,0	72,9	9806134	500
B	✓	✓		✓		26-26-22	26-26-19		26-26-19	47,4	61,2	9806110	250
B	✓	✓		✓		26-26-26	26-26-26		26-26-26	53,0	73,0	9806157	500
B	✓	✓				29-13-29				51,5	41,5	9806183	250
B	✓	✓				29-17-26				51,4	46,4	9806181	250
B	✓	✓		✓		29-17-29				53,5	59,6	9806301	500
B	✓	✓				37-13-26				50,2	57,9	9806205	100
B	✓	✓				50-26-50				69,5	82,0	9806204	100
B	✓	✓		✓		50-37-26				80,8	78,8	9806209	125
B	✓	✓		✓		50-37-50				96,0	78,9	9806208	50

T-razdjelnici
T-Manifolds

oblik C / Form C

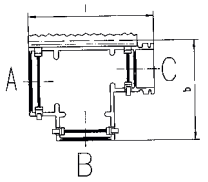

oblik D / Form D

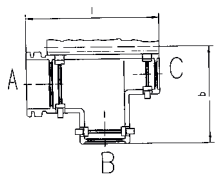

obuhvat iznutra / Inside gripping

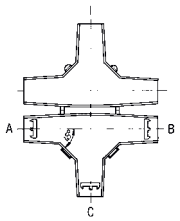

samo za standardni profil, nerazrezane
only for normal profile unslit

oblik Form	obuhvat izvana outside gripping	obuhvat iznutra inside gripping	zabravlji-vanje zupcima Snap lock	zabravlji-vanje obuhvatom Clamp lock	klizno umeta-nje na postolje Plug socket slide in	vanjsko hvatište na grani C exterior hook-up on branch C	unutarnji graničnik za cijev stop ridge for corru-gated tube inside	vanjsko hvatište na grani A exterior hook-up on branch A	odgovara za profil rebraste cijevi NW (A-B-C) standardni +UFW suitable for corrugated tube profile NW (A-B-C) normal +UFW	AHW AHW	samo-zatvarajući L-Profil self closing L-Profile	zabravlju-jući V-Profil lockable V-Profile	b mm b mm	l mm l mm	broj artikla Art. no.	JP kom. PU pcs.
C	✓			✓	✓	✓	✓		7,5-4,5-4,5	6-4,5-4,5	7,5-4,5-4,5		24,7	37,7	9806125	1000
C	✓			✓	✓		✓		10-8,5-8,5		10-8,5-8,5		29,1	36,0	9806188	500
C	✓			✓	✓	✓	✓		10-8,5-10		10-8,5-10		29,1	42,2	9806189	500
C	✓			✓	✓		✓		10-10-8,5		10-10-8,5		29,1	37,0	9806185	500
C	✓			✓	✓	✓	✓		10-13-10	8,5-11-8,5	10-13-10	8,5-11-8,5	29,1	46,2	9806186	500
C	✓			✓	✓	✓	✓		13-4,5-10	11-4,5-8,5	13-4,5-10		30,6	39,5	9806127	500
C	✓			✓	✓	✓	✓		13-8,5-13		13-8,5-13		31,6	42,4	9806118	1400
C	✓			✓	✓	✓	✓		13-13-13	11-11-11	13-13-13	11-11-11	31,9	46,6	9806115	500
C	✓			✓	✓	✓	✓		17-8,5-17				36,9	46,0	9806120	250
C	✓			✓	✓	✓	✓		17-17-13	15-15-11		15-15-11	37,2	51,9	9806187	500
C	✓			✓	✓	✓	✓		22-22-17	19-19-15		19-19-15	43,8	60,6	9806126	900
C	✓			✓		✓	✓		22-23-10				42,2	60,6	9806116	250
C	✓			✓		✓	✓		22-23-13				42,2	61,3	9806117	250
C	✓			✓		✓	✓		23-22-22				46,6	58,4	9806122	250
C	✓			✓		✓	✓		26-17-10	26-15-8,5		26-15-8,5	49,0	51,8	9806123	250
C	✓			✓		✓	✓		26-17-13	26-15-11		26-15-11	49,0	52,2	9806124	250
C	✓			✓		✓	✓		26-22-23				49,7	57,6	9806128	250
D	✓			✓	✓			✓	10-7,5-7,5	8,5-6-6	10-7,5-7,5		28,7	39,7	9806130	2000
D	✓			✓	✓			✓	13-10-10	11-8,5-8,5	13-10-10	11-8,5-8,5	31,9	43,6	9806131	500
obuhvat iznutra / Inside gripping																
		✓	✓						10-10-10					94,0	9806073	100
		✓	✓						10-17-22					105,0	9806074	100
		✓	✓						17-17-10					94,0	9806072	100
		✓	✓						17-17-17					94,0	9806076	100
		✓	✓						22-22-10					105,0	9806069	100
		✓	✓						22-22-17					105,0	9806070	100
		✓	✓						22-22-22					105,0	9806068	250

2.3

T-specijalni razdjelnici
T-Special Manifolds

oblik A / Form A

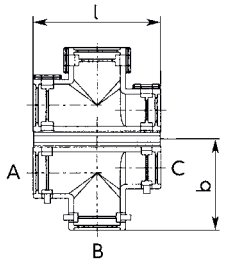

oblik B / Form B

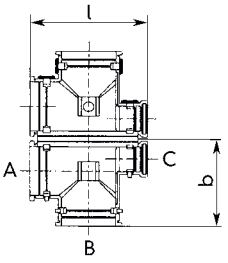

oblik C / Form C

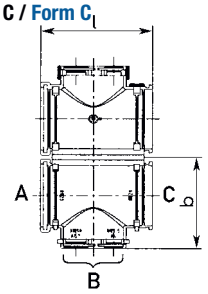

HF = High Flex Profil
High Flex Profile

oblik	obuhvat izvana	zabravljivanje obuhvatom	klizno umetanje na postolje	odgovara za profil rebraste cijevi NW (A-B-C) standardni +UFW	AHW	samo-zatvarajući L-Profil	zabravlju-jući V-Profil	b mm	l mm	broj artikla	JP kom.
Form	outside gripping	Clamp lock	Plug socket slide in	suitable for corrugated tube profile NW (A-B-C) normal +UFW	AHW	self closing L-Profile	lockable V-Profile	b mm	l mm	Art. no.	PU pcs.
A	✓	✓	✓	10-4,5-4,5	8,5-4,5-4,5	10-4,5-4,5				9806302	500
A	✓	✓			23HF-13-23HF			51,0	49,6	9810550	250
A	✓	✓			23HF-13-23HF			51,0	47,6	9810551	250
A	✓	✓		26-29-26				48,5	60,0	9806304	500
B	✓	✓		13-8,5-10	11-8,5-8,5	13-8,5-10	11-8,5-8,5			9806191	500
B	✓	✓		10-10-10	8,5-8,5-8,5	10-10-10	8,5-8,5-8,5			9806190	500
B	✓	✓		17-10-17	15-8,5-15	17-10-17	15-8,5-15			9806192	500
B	✓	✓		17-13-13	15-11-11	17-13-13	15-11-11			9806193	500
B	✓	✓		29-26-29				53,5	59,6	9806154	500
C	✓	✓		29-10/7,5-29						9806300	500

2.3

Y-razdjelnik

Y-Manifolds

RoHS

Materijal:
poliamid 66
poliamid 46 na upit

Radna temperatura:
-40°C do 135°C
500 h: -40°C do 150°C

Boje/izvedbe:
• crna

Material:
Polyamide 66
Polyamide 46 on request

Temperature range:
-40°C to 135°C
500 h: -40°C to 150°C

Colour(s)/Designs:
• Black

oblik A / Form A

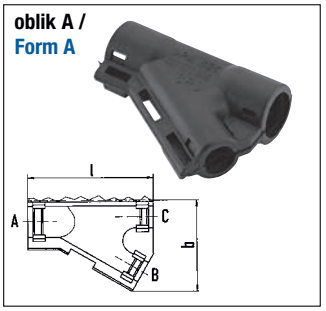

oblik B / Form B

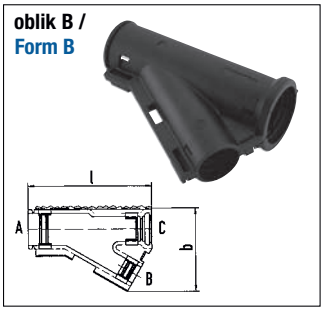

oblik C / Form C

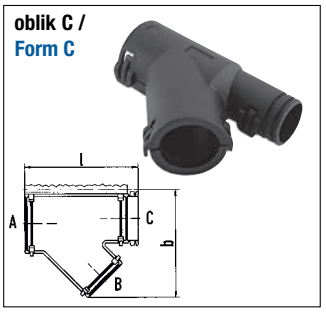

oblik D / Form D

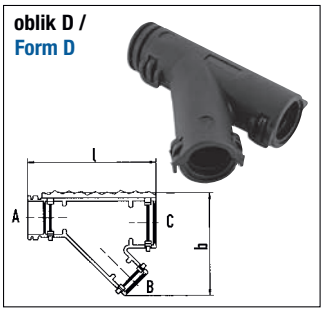

oblik Form	obuhvat izvana outside gripping	zabravljivanje zupcima Snap lock	zabravljivanje obuhvatom Clamp lock	klizno umetanje na postolje Plug socket slide in	vanjsko hvatište na grani C exterior hook-up on branch C	unutarnji graničnik za cijev stop ridge for corrugated tube inside	odgovara za profil rebraste cijevi NW (A-B-C) standardni +UFW suitable for corrugated tube profile NW (A-B-C) normal +UFW	AHW AHW	samo-zatvarajući L-Profil self closing L-Profile	zabravljujući V-Profil lockable V-Profile	b mm b mm	l mm l mm	broj artikla Art. no.	JP kom. PU pcs.
A	✓	✓					7,5-4,5-4,5	6-4,5-4,5	7,5-4,5-4,5		30,0	40,0	9817080	1000
A	✓	✓					7,5-4,5-7,5	6-4,5-6	7,5-4,5-7,5		30,0	40,0	9817083	1000
B	✓	✓			✓		17-13-17	15-11-15	17-13-17	15-11-15	58,4	78,8	9817201	500
B	✓	✓			✓		22-10-17	19- 8,5-15		19- 8,5-15	57,1	68,8	9817200	500
B	✓	✓			✓		22-13-17	19-11-15		19-11-15	55,1	60,3	9817203	500
B	✓	✓			✓		22-17-17	19-15-15		19-15-15	58,9	67,9	9817202	500
C	✓		✓	✓			4,5-4,5-4,5	4,5-4,5-4,5	4,5-4,5-4,5		27,8	33,0	9817050	1000
C	✓		✓	✓	✓		13-7,5-10	11-6-8,5	13-7,5-10		39,5	47,3	9817304	500
C	✓		✓		✓		13-10-10	11-8,5-8,5	13-10-10	11-8,5-8,5	45,4	59,9	9817306	500
C	✓		✓		✓		13-10-13	11-8,5-11	13-10-13	11-8,5-11	45,6	59,9	9817305	500
C	✓		✓		✓		13-13-13	11-11-11	13-13-13	11-11-11	46,6	59,9	9817308	500
C	✓		✓		✓		17-13-10	15-11-8,5	17-13-17	15-11-8,5	46,9	59,9	9817310	500
C	✓		✓		✓		17-17-10	15-15-8,5	17-17-10	15-15-8,5	48,8	59,9	9817309	500
C	✓		✓		✓		22-13-22	19-11-19		19-11-19	56,4	63,5	9817311	100
C	✓		✓		✓		22-22-22	19-19-19		19-19-19	64,7	76,7	9817302	250
C	✓		✓		✓		26-22-22	26-19-19		26-19-19	64,7	69,4	9817300	500
slično obliku C / similar to Form C														
	✓		✓	✓			8,5-8,5-8,5		8,5-8,5-8,5		38,9	45,0	9817040	500
	✓		✓	✓		✓	10-8,5-8,5		10-8,5-8,5		39,4	45,0	9817041	500
	✓		✓	✓	✓		10-8,5-10		10-8,5-10		40,0	51,2	9817030	500
	✓		✓	✓		✓	13-8,5-8,5		13-8,5-8,5		37,9	40,0	9817037	500
	✓		✓	✓	✓		13-8,5-10		13-8,5-10		40,1	49,2	9817031	500
	✓		✓	✓	✓		13-8,5-13		13-8,5-13		43,0	51,9	9817032	500
	✓		✓	✓	✓	✓	17-8,5-13		17-8,5-13		43,3	47,9	9817039	500
	✓		✓	✓	✓		17-10-10	15-8,5-8,5	17-10-10	15-8,5-8,5	41,9	46,2	9817033	500
	✓		✓	✓	✓	✓	17-10-17	15-8,5-15	17-10-17	15-8,5-15	49,7	55,6	9817038	500
	✓		✓	✓	✓		17-10-13	15-8,5-11	17-10-13	15-8,5-11	44,0	48,9	9817035	500
	✓		✓	✓	✓	✓	17-13-13	15-11-11	17-13-13	15-11-11	46,2	52,9	9817036	500
	✓		✓	✓	✓	✓	22-10-22	19-8,5-19		19-8,5-19	54,2	54,3	9817034	100
D	✓		✓		✓		10-10-10	8,5-8,5-8,5	10-10-10	8,5-8,5-8,5	43,0	54,4	9817303	500

verzija N / Version N

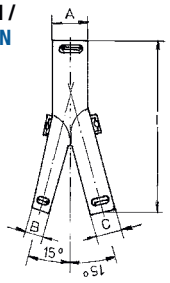

verzija O / Version O

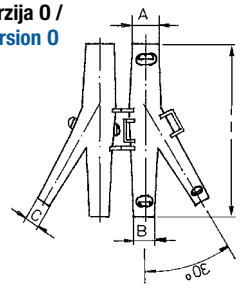

specijalni razdjelnici / Special Manifolds

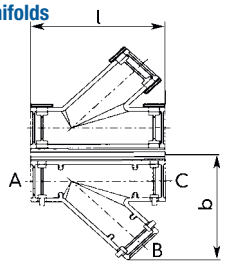

oblik	obuhvat izvana	obuhvat iznutra	klizno umetanje na postolje	odgovara za profil rebraste cijevi NW (A-B-C) standardni + UFW	AHW	samo-zatvarajući L-Profil	zabravlju-jući V-Profil	b mm	l mm	broj artikla	JP kom.
Form	outside gripping	inside gripping	Plug socket slide in	suitable for corrugated tube profile NW (A-B-C) normal + UFW	AHW	self closing L-Profile	lockable V-Profile	b mm	l mm	Art. no.	PU pcs.
N		✓		8,5-8,5-8,5					66,0	9817085	100
N		✓		10-8,5-8,5					66,0	9817107	1000
N		✓		13-10-10					72,3	9805575	100
N		✓		13-10-13					76,0	9805583	100
N		✓		17-10-10					67,0	9805559	100
N		✓		17-10-13					83,0	9805567	100
N		✓		17-13-13					83,0	9805540	100
N		✓		17-17-10					85,0	9806059	100
N		✓		22-22-8,5					95,0	9817220	100
N		✓		22-22-8,5					95,0	9806032	100
N		✓		22-22-13					100,0	9806016	100
N		✓		22-22-17					100,0	9806040	100
N		✓		22-22-22					105,0	9817212	100
N		✓		26-22-22					105,0	9806045	100
N		✓		29-22-22					110,0	9817352	100
N		✓		29-22-22					110,0	9806024	100
0		✓		10-10-10					64,0	9805524	100
0		✓		13-10-8,5					69,0	9817131	100
0		✓		13-13-8,5					85,0	9817336	100
0		✓		17-10-8,5					85,0	9817158	100
0		✓		17-10-17					85,0	9817159	100
0		✓		17-17-8,5					85,0	9817174	100
0		✓		17-17-13					85,0	9817190	100
0		✓		22-17-13					85,0	9805532	100
0		✓		22-17-17					105,0	9817344	100
0		✓		26-17-22					105,0	9817396	250
0		✓		26-22-17					105,0	9817395	100
0		✓		26-22-17					105,0	9817301	100
0		✓		26-26-8,5					105,0	9817360	100
0		✓		26-26-8,5					105,0	9817263	100
0		✓		26-26-10					105,0	9817379	100
0		✓		26-26-10					105,0	9817280	100
0		✓		26-26-17					105,0	9817387	100
0		✓		26-26-17					105,0	9817328	100
0		✓		29-29-17					109,0	9806026	100
0		✓		29-29-22					109,0	9806025	100
specijalni razdjelnik / Special Manifolds											
	✓			13-13-17	11-11-15	13-13-17	11-11-15	50,8	55,0	9817312	100
	✓		✓	26-26-17	26-26-15		26-26-15	70,0	81,8	9817250	100
	✓			26-26-26	26-26-26		26-26-26	71,0	75,0	9817060	100

V-razdjelnik

V-Manifolds

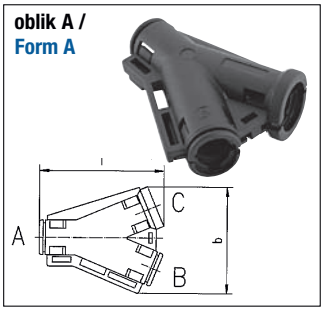

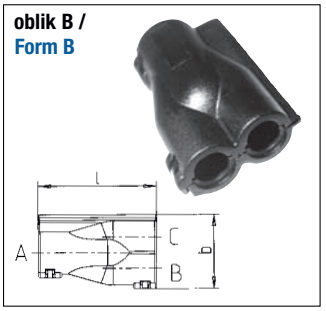

RoHS

Materijal:
poliamid 66
poliamid 46 na upit

Radna temperatura:
-40°C do 135°C
500 h: -40°C do 150°C

Boje/izvedbe:
• crna

Material:
Polyamide 66
Polyamide 46 on request

Temperature range:
-40°C to 135°C
500 h: -40°C to 150°C

Colour(s)/Designs:
• Black

oblik	obuhvat izvana	zabravlji-vanje zupcima	zabravlji-vanje obuhvatom	klizno umetanje na postolje	odgovara za profil rebraste cijevi NW (A-B-C) standardni +UFW	AHW	samo-zatvarajući L-Profil	zabravlju-jući V-Profil	b mm	l mm	broj artikla	JP kom.
Form	outside gripping	Snap lock	Clamp lock	Plug socket slide in	suitable for corrugated tube profile NW (A-B-C) normal +UFW	AHW	self closing L-Profile	lockable V-Profile	b mm	l mm	Art. no.	PU pcs.
A	✓	✓			7,5-7,5-7,5	6-6-6	7,5-7,5-7,5		40,1	46,9	9817079	500
B	✓		✓	✓	7,5-4,5-4,5	6-4,5-6			22,5	32,5	9817501	1000
B	✓		✓		10-4,5-7,5	8,5-4,5-6			33,5	38,0	9817503	1000

2.3

M-razdjelnik

M-Manifolds

RoHS

Materijal:
poliamid 66
poliamid 46 na upit

Radna temperatura:
-40°C do 135°C
500 h: -40°C do 150°C

Boje/izvedbe:
• crna

Material:
Polyamide 66
Polyamide 46 on request

Temperature range:
-40°C to 135°C
500 h: -40°C to 150°C

Colour(s)/Designs:
• Black

oblik A / Form A

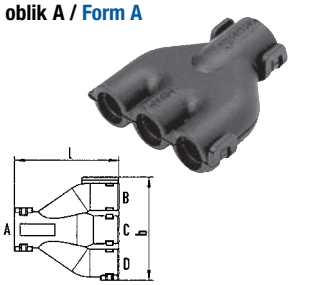

oblik B / Form B

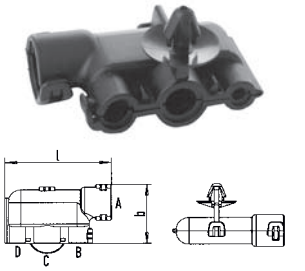

oblik C / Form C

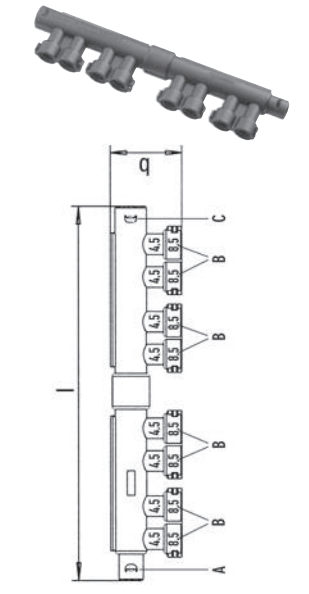

oblik D / Form D

oblik E / Form E
obuhvat iznutra / inside gripping
samo za standardni profil, nerazrezane/
only for normal profile unslit

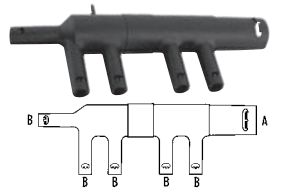

2.3

oblik Form	obuhvat izvana outside gripping	obuhvat iznutra inside gripping	zabravljivanje obuhvatom Clamp lock	pričvrsnik Spreed anchor	odgovara za profil rebraste cijevi NW (A-B-C-D) standardni +UFW suitable for corrugated tube profile NW (A-B-C-D) normal +UFW	AHW AHW	samo-zatvarajući L-Profil self closing L-Profile	zabravljujući V-Profil lockable V-Profile	b mm b mm	l mm l mm	broj artikla Art. no.	JP kom. PU pcs.
A	✓		✓		7,5-4,5-4,5-4,5	6-4,5-4,5-4,5	7,5-4,5-4,5-4,5		36,5	36,0	9817090	500
A	✓		✓		10-4,5-7,5-4,5	8,5-4,5-6-4,5	10-4,5-7,5-4,5			45,4	9817092	250
A	✓		✓		10-7,5-7,5-4,5	8,5-6-6-4,5	10-7,5-7,5-4,5			45,4	9817091	500
B	✓		✓	✓	10-4,5-7,5-3	8,5-4,5-6-3			31,6	52,5	9817502	500
C	B	A+C	✓		13-8x8,5(4,5)-17				38,5	185,5	9817095	250
D	✓		✓		17-13-13-10-10	15-11-11-8,5-8,5			90,3	97,5	9811220	500
	✓		✓		29-2x10-2x17-22				82,7	81,5	9817500	250
E		✓	✓		22-5x10						9806067	50

Pregled zaštitnih pokrova za utikače / Overview Connector Interfaces

oblik A / Form A	oblik B / Form B	oblik C / Form C	oblik D / Form D
Ravni Straight	Poprečni Cross	Uzdužni Lengthwise	Okretni Turnable

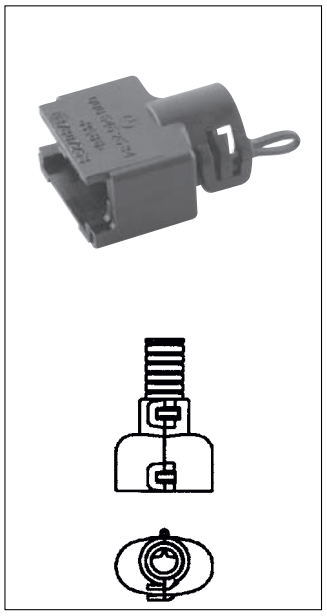

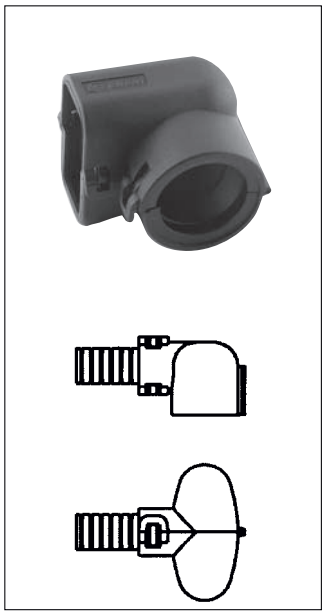

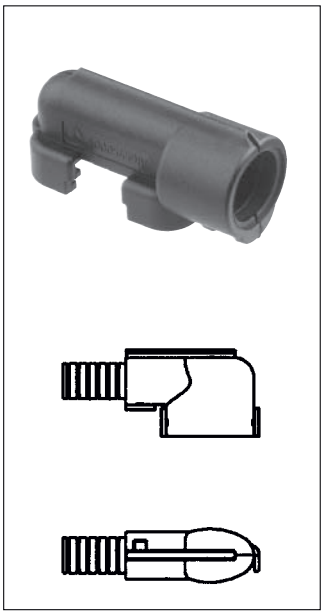

Naziv proizvođača utikača / Name of Plug Manufacturer

AMP	AMP/Tyco	FEP	Fahrzeugelektrik Pirna	RNH	Reinshagen
CINCH	CINCH	GHW	Grote & Hartmann/Lear	SA	Schlemmer
DELPHI	DELPHI	HM	Hirschmann	SIEMENS	SIEMENS
DEUTSCH	DEUTSCH	KBR	KBR	SUM	SUMITOMO
EPC	EPC	LK	Kostal	Tyco	Tyco/AMP
FCI	Framatome	RB	Robert Bosch		

Primjeri za imena zaštitnih pokrova za utikače / Examples for name of Connector Interfaces

Naziv proizvođača utikača i priključka Plug Manufacturer and poles or Connector	tip kontakta ili grupa utikača Contact-Type or Plug-family	oblik Form	odgovara za rebrastu cijev suitable for corrugated tube	Posebni detalji Special details
GHW2	MKR	A	NW 8,5	SES
FEP 2x5	2,8	B	NW 10	
AMP2	JPT	B	NW 4,5	45

Osnovne dimenzije / Main dimensions

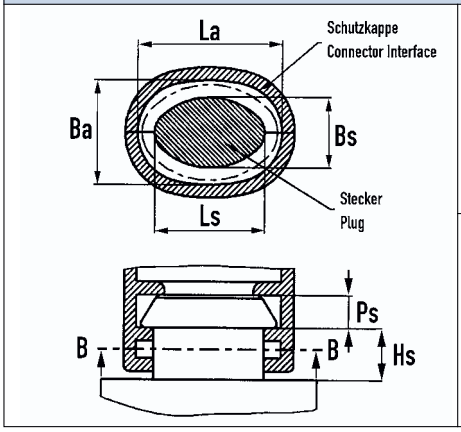

EL

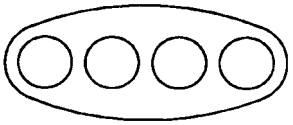

eliptični oblik / Elliptical form

RE

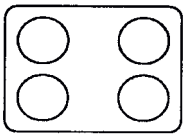

pravokutni oblik / Rectangular form

RD

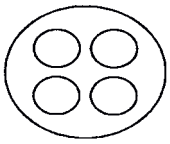

kružni oblik / Circle form

RR

uzdužni oblik / Long hole form

2.3

Zaštitni pokrovi za utikače

Connector-Interfaces

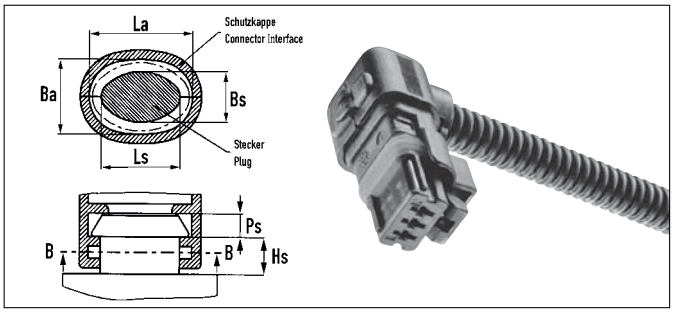

RoHS

Materijal:
poliamid 66
poliamid 46 na upit

Radna temperatura:
-40°C do 135°C
500 h: -40°C do 150°C

Boje/izvedbe:
- crna
- obuhvat izvana

Svojstva:
- zaštita spoja između kraja cijevi i utikača
- zaštita kontaktnih površina spoja protiv prskanja i mlaza vode
- zaštita od izvlačenja vodiča
- omogućava dobru elektro provodljivost spoja
- bolji vizualni dojam spoja
- lako za montažu

Material:
Polyamide 66
Polyamide 46 on request

Temperature range:
-40°C to 135°C
500 h: -40°C to 150°C

Colour(s)/Designs:
- Black
- outside gripping

Characteristics:
- Protection of the harness between end of the tube and connector
- Protection of the harness contact cells against splash- and straywater
- traction relief for the conducting wire
- Enables a fixed guidance within the harness
- Better visual effect of the harness
- Easy to assemble

2.3

Utikač	oblik	profil NW standardni + UFW	AHW	High Flex	Svojstva	Broj utikača	oblik	Osnovne dimenzije Ls	Bs	Hs	Ps	La	Ba	broj artikla	JP kom.
Connector	Form	Contour NW normal + UFW	AHW	High Flex	Feature	Connector No.	Form	Main Dimensions Ls	Bs	Hs	Ps	La	Ba	Art. no.	PU pcs.
AMP10/2x10	A			13			RE	54,0	20,0	-	-	58,0	24,0	7807775	500
AMP10/2x10	A	17	15				RE	54,0	20,0	-	-	58,0	24,0	7807778	500
AMP10/2x10	B	13	11				RE	54,0	20,0	-	-	58,0	24,0	7807769	500
AMP10	B	9					RE	54,0	20,0	-	-	58,0	24,0	7807670	500
AMP10	D	10	8,5				RD	25,3	25,3	8,4	2,5	29,6	29,6	7807663	500
AMP10	D	7,5	6				RD	25,3	25,3	8,4	2,5	29,6	29,6	7807676	500
AMP1	A	4,5	4,5		CAND	01-51006-1	RD	10,5	10,5	-	4,2	13,4	13,4	7807653	1000
AMP1	A	4,5	4,5		CAND-50	01-51006-1	RD	10,5	10,5	-	4,2	13,4	13,4	7807683	1000
AMP1-SS	A	10	8,5			282079-x	RD	7,6	7,6	5,0	3,0	9,4	9,4	7807043	250
AMP1-SS	A	4,5	4,5			282079-x	RD	7,6	7,6	5,0	3,0	10,3	10,3	7807188	1000
AMP1-SS	A	7,5	6			282079-x	RD	7,6	7,6	5,0	3,0	10,3	10,3	7807783	1000
AMP1-SS	D	10	8,5			282079-x	RD	7,6	7,6	5,0	3,0	9,4	9,4	7807035	500
AMP1-SS	D	3				282079-x	RD	7,6	7,6	5,0	3,0	9,5	9,5	7807003	1000
AMP1-SS	D	4,5	4,5			282079-x	RD	7,6	7,6	5,0	3,0	9,5	9,5	7807063	2000
AMP21-JPT	A	glatki / smooth				1-967 630	RE	37,7	18,2	6,0	8,0	37,8	24,4	7894050	250
AMP2	B	8,5			45°	1-1355338-1	EL	13,3	8,2	7,0	4,0	17,1	12,1	7807199	1000
AMP2-CPA	A	4,5	4,5				RR	15,5	10,5	7,0	2,7	19,0	14,0	7807628	1000
AMP2-CPA	B	4,5	4,5				RR	15,5	10,5	7,0	2,7	19,0	14,0	7807730	1000
AMP2-CPA	C	4,5	4,5				RR	15,5	10,5	7,0	2,7	19,0	14,0	7807185	1000
AMP2-JPT	A	glatki / smooth				282762-x	RR	12,8	7,8	16,5	5,1	23,2	13,8	7807791	1000
AMP2-JPT	A	4,5	4,5			282762-x	RR	12,8	7,8	16,5	5,1	17,1	12,0	7807685	1000
AMP2-JPT	B	4,5	4,5		45°	282762-x	RR	12,8	7,8	16,5	5,1	17,1	12,0	7807075	1000
AMP2-MQ	A	4,5	4,5			965324	-	-	-	-	-	-	-	7807249	1000
AMP2-MQ	B	4,5	4,5			965324	-	-	-	-	-	-	-	7807247	1000
AMP2-MQS	A	4,5	4,5		ABS		EL	11,0	9,0	2,8	1,2	14,0	12,0	7807173	1000
AMP2-SS	A	glatki / smooth				282080-x	RR	13,6	7,6	5,0	3,0	20,0	10,6	7807656	1000
AMP2-SS	A	10	8,5			282080-x	RR	13,6	7,6	5,0	3,0	15,4	9,4	7807042	2000
AMP2-SS	A	10/8,5/7,5	8,5/-/6			282080-x	RR	13,6	7,6	5,0	3,0	15,4	9,4	7807490	1000
AMP2-SS	A	4,5	4,5			282080-x	RR	13,6	7,6	5,0	3,0	17,2	12,2	7807192	1000
AMP2-SS	A	7,5	6		EHK 10	282080-x	RR	13,6	7,6	5,0	3,0	17,2	12,2	7807128	1000
AMP2-SS	B	4,5	4,5			282080-x	RR	13,6	7,6	5,0	3,0	17,1	12,1	7807602	1000
AMP2-SS	C	10	8,5			282080-x	RR	13,6	7,6	5,0	3,0	15,4	9,4	7807037	1000
AMP2-SS	C	4,5	4,5			282080-x	RR	13,6	7,6	5,0	3,0	17,2	12,2	7807194	1000
AMP2-SS	C	7,5	6		EHK 10	282080-x	RR	13,6	7,6	5,0	3,0	17,2	12,2	7807120	1000
AMP2x3-CPA	A	4,5	4,5				EL	15,2	11,1	6,5	3,0	18,3	14,3	7807682	1000
AMP2x3-CPA	A	7,5	6				EL	15,2	11,1	6,5	3,0	18,3	14,3	7806861	1000
AMP2x5-1.5	B	7,5	6			6X0 973 815	EL	23,4	13,6	7,5	4,0	26,4	16,6	7807066	1000
AMP2x6	A	10	8,5		KP	-	-	-	-	-	-	-	-	7777001	500
AMP2x6	A	10	8,5		ST	-	-	-	-	-	-	-	-	7777002	500
AMP2x6	A	9				-	RE	31,2	12,6	-	2,4	34,2	15,8	7806570	500
AMP3-CPA	A	glatki / smooth					RR	19,4	10,4	7,2	2,6	23,1	14,0	7807833	1000
AMP3-CPA	A	4,5	4,5				RR	19,4	10,4	7,2	2,6	23,1	14,0	7807172	1000
AMP3-CPA	C	4,5	4,5				RR	19,4	10,4	7,2	2,6	23,1	14,0	7807657	1000

Utikač Connector	oblik Form	profil NW standardni + UFW Contour NW normal + UFW	AHW AHW	High Flex High Flex	Svojstva Feature	Broj utikača Connector No.	oblik Form	Osnovne dimenzije Ls Main Dimensions Ls	Bs Bs	Hs Hs	Ps Ps	La La	Ba Ba	broj artikla Art. no.	JP kom. PU pcs.
AMP3-CPA	C	4,5	4,5		155°		RR	19,4	10,4	7,2	2,6	23,1	14,0	7807832	500
AMP3	D	7,5	6			-	RD	15,8	15,8	8,4	2,4	20,1	20,1	7807664	1000
AMP3-JPT	A	glatki / smooth				282729-x	RR	17,8	7,8	16,5	5,5	23,2	13,8	7807792	1000
AMP3-JPT	A	4,5	4,5			282729-x	RR	17,8	7,8	16,5	5,5	23,2	13,8	7807184	1000
AMP3-JPT	C	7,5	6			282729-x	RR	17,8	7,8	16,5	5,5	23,2	13,8	7807118	1000
AMP3-MQ	A	4,5	4,5			1 967 081-1	-	-	-	-	-	-	-	7807045	1000
AMP3-SS	A	glatki / smooth				282087-x	RR	19,6	7,6	5,0	3,0	23,2	13,8	7807790	1000
AMP3-SS	A	10	8,5			282087-x	RR	19,6	7,6	5,0	3,0	21,4	9,4	7807041	250
AMP3-SS	A	10/8,5/7,5	8,5/-/6			282087-x	RR	19,6	7,6	5,0	3,0	24,8	13,2	7807491	1000
AMP3-SS	A	4,5	4,5			282087-x	RR	19,6	7,6	5,0	3,0	24,8	13,2	7807768	1000
AMP3-SS	A	7,5	6		EHK 10	282087-x	RR	19,6	7,6	5,0	3,0	24,8	13,2	7807196	1000
AMP3-SS	C	10	8,5			282087-x	RR	19,6	7,6	5,0	3,0	21,4	9,4	7807036	1000
AMP3x8	A	17	15			1745048-1	RE	44,0	18,6	6,6	1,5	47,1	21,6	7807497	500
AMP4-DIN	A	4,5	4,5			1-965569-2	RD	18,3	18,3	-	-	20,5	20,5	7807699	1000
AMP4-DIN	A	7,5	6		EHK 10	1-965569-2	RD	18,3	18,3	-	-	20,5	20,5	7807700	1000
AMP4-DIN	D	10	8,5			1-965569-2	RD	18,3	18,3	-	-	20,5	20,5	7807662	1000
AMP4-DIN	D	4,5	4,5			1-965569-2	RD	18,3	18,3	-	-	20,5	20,5	7807660	1000
AMP4-DIN	D	7,5	6		EHK 10	1-965569-2	RD	18,3	18,3	-	-	20,5	20,5	7807661	1000
AMP4-JPT	A	7,5	6			282764-x	RR	22,8	7,8	6,0	5,5	28,5	14,0	7807068	1000
AMP4-JPT	B	7,5	6			282764-x	RR	22,8	7,8	6,0	5,5	28,5	14,0	7807088	1000
AMP4-MQ	A	4,5	4,5				-	-	-	-	-	-	-	7806880	1000
AMP4-SS	A	10	8,5			282088-x	RR	25,6	7,6	5,0	3,0	27,4	9,4	7807040	250
AMP4-SS	A	10/8,5/7,5	8,5/-/6			282088-x	RR	25,6	7,6	5,0	3,0	31,0	15,2	7807492	1000
AMP4-SS	A	4,5	4,5			282088-x	RR	25,6	7,6	5,0	3,0	31,0	15,2	7807771	1000
AMP4-SS	A	7,5	6		EHK 10	282088-x	RR	25,6	7,6	5,0	3,0	31,0	15,2	7807198	1000
AMP5-JPT	A	7,5	6			282766-x	RR	27,7	7,7	16,5	5,5	32,5	15,1	7807067	1000
AMP5-JPT	A	8,5				282766-x	RR	27,7	7,7	16,5	5,5	32,5	15,1	7807086	1000
AMP5-JPT	C	4,5	4,5			282766-x	RR	27,7	7,7	16,5	5,5	35,1	15,1	7807686	1000
AMP5-SS	A	10	8,5			-	RR	31,6	7,6	5,0	3,0	33,4	9,4	7807039	250
AMP5-SS	A	7,5	6		EHK 10	-	RR	31,6	7,6	5,0	3,0	33,4	9,4	7807762	1000
AMP64	A	17	15		D5	x-284272-x	RE	22,6	15,7	-	2,0	-	-	7807622	1000
AMP6-JPT	C	10	8,5				RR	32,5	7,5	16,5	5,2	41,1	16,1	7807667	1000
AMP6-MQ	A	7,5	6			x-967616-x	-	-	-	-	-	-	-	7807606	1000
AMP6-MQS-45	-	7,5	6				-	-	-	-	-	-	-	7807498	n.u/o.r.
AMP6-MQS	B	7,5	6		180°		-	-	-	-	-	-	-	7806610	n.u/o.r.
AMP6-SS	A	10	8,5			-	RR	37,6	7,6	5,0	3,0	39,4	9,4	7807038	250
AMP6-SS	A	7,5	6		EHK 10	-	RR	37,6	7,6	5,0	3,0	39,4	9,4	7807763	1000
AMP94	A	22	19			tyco 1-1355133-2	-	-	-	-	-	-	-	7807692	500
AMP94	A			23		tyco 1-1355133-2	-	-	-	-	-	-	-	7807687	1000
AMP94	D			19			-	-	-	-	-	-	-	7807688	500
AMP94	D	22	19				-	-	-	-	-	-	-	7807693	1000
B+GENERATOR	B	glatki / smooth				-	RD	-	-	-	-	-	-	7807002	1000
CAT70	B	26	26			160-7689	RE	76,5	46,1	-	-	76,5	46,1	7807773	250
CINCH38	A	13	11			51201EV38M1	RE	27,5	13,6	5,0	6,0	30,4	16,6	7807600	1000
CINCH38	B			19		51201EV38M1	RE	27,5	13,6	5,0	6,0	30,4	16,6	7807601	500
CINCH38	C			19		51201EV38M1	RE	27,5	13,6	5,0	6,0	30,4	16,6	7807001	1000
DELPHI1-MP2,8	A	4,5	4,5			280 GT 15336354	-	14,5	8,8	-	-	-	-	7807767	1000
DELPHI2-GLOBAL	B	4,5	4,5				RR	13,6	7,6	5,0	2,0	17,1	12,1	7807602	1000
DELPHI2-GT	B	4,5	4,5		45°		-	-	-	-	-	-	-	7807190	1000
DELPHI2-MP2,8	A	7,5	6				-	22,0	8,8	-	-	-	-	7807764	1000
DELPHI2-TS	B	7,5	6			15336016	-	-	-	-	-	-	-	7807794	1000
DELPHI2x3	B	7,5	6				-	-	-	-	-	-	-	7807820	500
DELPHI2x5	A	10	8,5		glatki / smooth		-	24,0	14,4	-	-	-	-	7807671	1000
DELPHI38	B			13			-	-	-	-	-	-	-	7807836	500
DELPHI3	A	glatki / smooth					EL	-	-	-	-	-	-	7806590	1000
DELPHI4	A	7,5	6				-	-	-	-	-	-	-	7807711	1000
DELPHI4	C	7,5	6				EL	22,1	9,5	9,5	2,0	25,0	12,6	7807723	1000
DELPHI4-GT150	A	10	8,5			1533 6035	RR	15,0	5,7	4,5	3,0	-	-	7807181	1000
DELPHI4-GT150	A	7,5	6			1533 6035	RR	15,0	5,7	4,5	3,0	-	-	7807182	1000
DELPHI4-GT150	C	7,5	6			1533 6035	RR	15,0	5,7	4,5	3,0	-	-	7807178	1000
DELPHI5-GT280	C	7,5	6				RR	39,8	8,9	5,8	3,1	41,6	10,8	7807789	1000
DELPHI-FS	A	10	8,5			FS N40 BMW 7 506 699	RD	16,4	16,4	-	4,5	18,4	18,4	7807450	1000
DEUTSCH2	A	4,5	4,5				RE	12,6	10,4					7806750	1000
DEUTSCH2	D	4,5/8,5	4,5				RD	-	-	-	-	-	-	7806751	1000
EPC2	C	4,5			45°		RR	11,5	6,5	-	-	13,9	8,9	7806780	1000
FCI14/16	D	13	11				RD	24,8	24,8	2,8	3,5	28,7	28,7	7807650	1000
FCI14/16	D	13	11		glatki / smooth		RD	24,8	24,8	2,8	3,5	28,7	28,7	7807640	1000
FCI14/16	D	9					RD	24,8	24,8	2,8	3,5	28,7	28,7	7807649	1000

Utikač Connector	oblik Form	profil NW standardni + UFW Contour NW normal + UFW	AHW AHW	High Flex High Flex	Svojstva Feature	Broj utikača Connector No.	oblik Form	Osnovne dimenzije Ls Main Dimensions Ls	Bs Bs	Hs Hs	Ps Ps	La La	Ba Ba	broj artikla Art. no.	JP kom. PU pcs.
FCI14	A	10	8,5				RD	24,8	24,8	2,8	5,0	28,7	28,7	7807638	1000
FCI14	A	13	11				RD	24,8	24,8	2,8	5,0	28,7	28,7	7806583	500
FCI24	C	glatki / smooth					RE							7806625	1000
FCI24-SICMA	A	17	15				RE	39,0	21,5	9,5	7,7	39,0	21,5	7807795	500
FCI24-SICMA	C	17	15		45°		RE	39,0	21,5	9,5	7,7	39,0	21,5	7807786	n.u/o.r.
FCI2-SICMA	A	glatki / smooth					RE	15,4	13,2	-	-	15,4	13,2	7807695	1000
FCI2-SICMA	A	4,5	4,5				RE	15,4	13,2	-	-	15,4	13,2	7807169	1000
FCI x 24-2,8	A	10	8,5			3A0 973 834/3A0 973 734	EL	31,1	15,1	8,0	4,0	36,2	20,2	7807104	500
FCI34	D	glatki / smooth					RD	36,8	36,8	2,6	3,5			7806867	1000
FCI34	D	13	11		glatki / smooth -V1		RD	36,8	36,8	2,6	3,5	40,4	40,4	7806980	500
FCI34	D	13	11		glatki / smooth -V2		RD	36,8	36,8	2,6	3,5	40,4	40,4	7806981	500
FCI3-SICMA	B	7,5	6			297 857	-	-	-	-	-	-	-	7806071	3000
FCI3-SICMA	B	7,5	6				-	-	-	-	-	-	-	7806070	1000
FCI4	A	7,5	6				RE	29,5	11,3	-	-	-	-	7807797	500
FEP2-2,8	B	8,5			45°	1J0 973 722	EL	13,3	8,4	7,0	4,0	17,1	12,1	7807199	1000
FEP2-2,8	C	7,5	6			1J0 973 722	EL	13,3	8,4	7,0	4,0	17,1	12,1	7807203	1000
FEP2-4.8	C	10	8,5			1J0 973 752/3B0 973 752 A	EL	21,3	14,3	7,0	4,0	24,2	17,2	7807023	1000
FEP2 x 3-1,5	B	7,5	6			4 203 2800-1J0 973 713 G	EL	15,2	12,4	6,0	4,0	18,5	15,7	7807673	1000
FEP2x3-1.5	B	7,5	6		BS	4 203 2800 - 1J0 973 713 G	EL	15,2	12,4	6,0	4,0	18,5	15,7	7806076	1000
FEP2 x 3-1,5	C	7,5	6			1J0 973 713	EL	15,2	12,4	6,0	4,0	18,3	15,5	7806940	1000
FEP2x4-1.5	A	7,5	6			1J0 973 714	EL	19,5	12,7	6,0	4,0	22,6	15,8	7807131	1000
FEP2 x 7-1,5	B	10	8,5			4 203 2500-SX0 973 717	EL	31,5	15,7	6,0	4,0	34,5	18,7	7807174	1000
FEP x 27-1,5	B	10	8,5		HS	4 203 2500-SX0 973 717	EL	31,5	15,7	6,0	4,0	34,5	18,7	7807207	1000
FEP x 27-1,5	C	10	8,5			4 203 2500-SX0 973 717	EL	31,5	15,7	6,0	4,0	34,1	20,2	7807624	500
FEP3-1,5	B	8,5			45°	1J0 973 703	EL	13,7	8,8	6,0	4,0	17,1	12,1	7807199	1000
FEP3-1,5	C	7,5	6			1J0 973 703	EL	13,7	8,8	6,0	4,0	17,1	12,1	7807203	1000
FEP3-2,8	A	4,5	4,5			1J0 973 723-1K0 973 202	EL	19,3	9,4	7,0	4,0	23,1	13,1	7807768	1000
FEP3-2,8	B	4,5	4,5			1J0 973 723-1K0 973 202	EL	19,3	9,4	7,0	4,0	23,1	13,1	7806860	1000
FEP5-1.5	C	7,5	6				-	-	-	-	-	-	-	7807111	1000
FEP5-4,8	A	10	8,5				-	-	-	-	-	-	-	7806075	500
FEP6-2,8	C	10	8,5			1J0 973 726	EL	37,3	12,4	7,0	4,0	41,1	16,1	7807629	500
GHW12	D	13	11		35°	3944540	RD	31,0	31,0	10,0	3,8	34,0	34,0	7807244	1000
GHW12	D	17	15		35°	3944540	RD	31,0	31,0	10,0	3,8	34,0	34,0	7807480	500
GHW21	A	17	15				RE	43,9	19,9	17,3	4,7	52,2	28,2	7807246	500
GHW2	A	8,5					-	-	-	-	-	-	-	9805702	2000
GHW2-MKR	A	8,5			N	18286	EL	14,1	9,2	13,0	4,0	17,1	12,2	7807025	1000
GHW2-MKR	A	8,5			SES-N	18286	EL	14,1	9,2	13,0	4,0	17,1	12,2	7807027	1000
GHW3	A	8,5					-	-	-	-	-	-	-	9805706	1000
GHW4-MKR	A	8,5			N	18284	RE	14,9	10,1	14,0	4,0	21,2	16,6	7807029	1000
GHW4-MKR	A	8,5			SES-N	18284	RE	14,9	10,1	14,0	4,0	21,2	16,6	7807031	1000
GHW7	D	13	11		VF	16131	RD	18,0	18,0	18,0	1,5	19,7	19,7	7807062	500
HFM6	C	4,5	4,5				-	-	-	-	-	-	-	7806600	250
HM1/2-MLK	A	glatki / smooth			CPA	A0475459428	RR	11,9	7,9	5,6	1,5	14,8	10,8	7807781	1000
HM1/2-MLK	A	glatki / smooth			CPA	A0475459428	RR	11,9	7,9	5,6	1,5	14,8	10,8	7807787	1000
HM2	A	4,5	4,5				-	-	-	-	-	-	-	7807467	500
HM2	A	7,5	6		CABIND		RR	12,8	10,8	-	3,2	14,2	12,2	7807655	1000
HM2-MLK	A	4,5	4,5			705-160	RE	11,9	7,9	5,6	1,5	14,8	10,8	7806995	1000
HM2-MLK	B	4,5	4,5		CPA	705-160	RE	11,9	7,9	5,6	1,5	14,8	10,8	7806796	1000
HM2-MLK	C	4,5	4,5		CPA	705-160	RE	11,9	7,9	5,6	1,5	14,8	10,8	7806793	1000
HM3	C	4,5	4,5				-	-	-	-	-	-	-	7807468	1000
HM3-MLK	A	4,5	4,5			705-162	RE	15,9	7,9	5,5	1,5	18,9	10,8	7806801	1000
HM3-MLK	B	4,5	4,5		CPA	705-162	RE	15,9	7,9	5,5	1,5	18,9	10,8	7806803	1000
HM3-MLK	B	7,5	6		CPA	705-162	RE	15,9	7,9	5,5	1,5	18,9	10,8	7807831	1000
HM3-MLK	C	4,5	4,5		CPA	705-162	RE	15,9	7,9	5,5	1,5	18,9	10,8	7806794	1000
HM3-MLK	C	7,5	6		CPA	705-162	RE	15,9	7,9	5,5	1,5	18,9	10,8	7806581	1000
HM4	A	7,5	6		CAND		RR	11,7	4,6	1,5	1,5	13,7	7,0	7806587	1000
HM4	B	7,5	6				-	-	-	-	-	-	-	7807521	1000
HM4	B	7,5	6		180°		-	-	-	-	-	-	-	7807522	1000
HM4	C	4,5	4,5				-	-	-	-	-	-	-	7806560	1000
HM4-MLK	A	4,5	4,5			705-164	RR	21,3	9,3	5,5	1,5	24,3	12,3	7806589	1000
HM4-MLK	A	7,5	6			705-164	RR	21,3	9,3	5,5	1,5	24,3	12,3	7806806	1000
HM4-MLK	B	7,5	6		CPA	705-362	RR	21,3	9,3	5,5	1,5	24,3	12,3	7806807	1000
HM4-MLK	C	7,5	6		CPA	705-164	RR	21,3	9,3	5,5	1,5	24,3	12,3	7806808	1000
HM5	C	4,5	4,5				-	-	-	-	-	-	-	7806914	500
HM5-MLK	A	7,5	6			705-181	RE	25,3	9,3	5,5	1,5	28,3	12,3	7807780	1000
HM5-MLK	B	7,5	6			705-181	RE	25,3	9,3	5,5	1,5	28,3	12,2	7806795	1000
HM5-MLK	C	10	8,5			705-181	RE	25,3	9,3	5,5	1,5	28,3	12,2	7807788	1000

Utikač Connector	oblik Form	profil NW standardni + UFW Contour NW normal + UFW	AHW AHW	High Flex High Flex	Svojstva Feature	Broj utikača Connector No.	oblik Form	Osnovne dimenzije Main Dimensions Ls	Bs	Hs	Ps	La	Ba	broj artikla Art. no.	JP kom. PU pcs.
HM5-MLK	C	7,5	6			705-181	RE	25,3	9,3	5,5	1,5	28,3	12,2	7806790	1000
ITT50-APD	D	22	19			120110-0075	RD	33,8	33,8	-	-	36,4	36,4	7807680	500
ITT50-APD	D	26	26			120110-0075	RD	33,8	33,8	-	-	36,4	36,4	7807679	500
JETRONIC2	A	8,5 UFW					-	-	-	-	-	-	-	9805711	500
JETRONIC3	A	10 UFW					-	-	-	-	-	-	-	9805710	500
KBR2	B	glatki / smooth			50L	4B0 971 955	EL	31,4	19,7	12,6	3,5	34,5	23,0	7807143	500
KS	A	13	11				RD							7806874	1000
KS	D	13	11				RD	-	-	-	-	-	-	7806863	1000
KTL	B	7,5	6				RE	-	-	-	-	-	-	7806500	1000
LK10	B	8,5					RE	27,3	10,2	3,0	4,0	27,4	13,3	7807022	1000
LK16	A	8,5				09 4307 01	RD	-	-	-	-	-	-	7807018	500
LK20	D	13	11			09 4320 01	RD	26,3	26,3	5,0	3,7	31,0	31,0	7807090	500
LK20	D	17	15		EHK22	09 4320 01	RD	26,3	26,3	5,0	3,7	31,0	31,0	7807636	500
LK 25	C			19	35°	09 4025 ..	RE	66,5	22,5	-	-	70,0	25,0	7807637	250
LK2	C	4,5	4,5		180°		-	-	-	-	-	-	-	7806853	1000
LK2-MT	A+D	4,5	glatki / smooth				-	-	-	-	-	-	-	7806915	500
LK2-MT	A	4,5	4,5			09 4404 ..	EL	14,2	9,1	7,0	5,0	18,0	12,9	7807840	1000
LK2-MT	-	4,5	4,5		180°		-	-	-	-	-	-	-	7807841	500
LK23-MLK1,2	C	7,5	6			09 4421 ..	RE	13,6	9,6	2,0	2,0	17,0	11,4	7807010	1000
LK3-MT	B	4,5	4,5			09 4403 ..	EL	19,2	11,2	7,0	5,0	23,0	15,0	7807806	1000
LK3-SLK2,8	C	4,5	4,5		MS	09 44149 .	-	-	-	-	-	-	-	7806917	1000
LK4-LKS1,5	A	7,5	6				-	-	-	-	-	-	-	7806925	1000
LK4-SLK2.8	B	7,5	6			53644 0	RR	21,6	6,6	7,0	5,0	25,8	10,8	7806910	1000
LK4-SLK2,8	B	7,5	6		glatki / smooth		-	-	-	-	-	-	-	7806912	500
LK5	C	7,5	6			09 44150 .	EL	27,4	11,5	7,0	5,0	31,0	15,2	7807271	1000
MTA2	B	4,5	4,5		36°	1 928 403 874	EL	11,5	7,0	7,0	2,0	15,1	10,6	7807710	n.u./o.r.
MTA4	A	10	8,5		SL		EL	21,6	9,0	7,0	2,0	25,1	12,5	7806584	1000
PASS05	C	glatki / smooth					RE	26,8	13,5	-	-	-	-	7807760	1000
RB16	A	13	11			1 928 404 190	RD	-	-	-	-	-	-	7807176	1000
RB16	A	8,5				1 928 404 190	RD	-	-	-	-	-	-	7807175	1000
RB2-JT	A	4,5	4,5				EL	14,0	9,0	13,6	5,0	17,2	12,2	7806869	1000
RB2-JT	A	8,5 UFW					-	-	-	-	-	-	-	9805711	500
RB2-KPT1,5	C	4,5	4,5			1 928 403 874	EL	11,5	7,0	7,0	2,0	15,1	10,6	7807681	1000
RB2-KPT1.5	C	4,5	4,5			1 928 403 874	EL	11,5	7,0	7,0	2,0	15,1	10,6	7807835	200
RB2-KPT	A	glatki / smooth				1 928 403 874	EL	11,5	7,0	7,0	2,0	20,0	10,6	7807651	1000
RB2-KPT	A	4,5	4,5			1 928 403 874	EL	11,5	7,0	7,0	2,0	15,1	10,6	7807611	1000
RB2-KPT	A	4,5	4,5		PA46	1 928 403 874	EL	11,5	7,0	7,0	2,0	15,1	10,6	7806116	200
RB2-KPT	A	7,5	6			1 928 403 874	EL	11,5	7,0	7,0	2,0	15,1	10,6	7807612	1000
RB2-KPT	B	4,5	4,5			1 928 403 874	EL	11,5	7,0	7,0	2,0	15,1	10,6	7807069	1000
RB2-KPT	B	7,5	6			1 928 403 874	EL	11,5	7,0	7,0	2,0	15,1	10,6	7807079	1000
RB2-KPT	C	4,5	4,5		35L	1 928 403 874	EL	11,5	7,0	7,0	2,0	15,1	10,6	7807634	1000
RB2-KPT	C	7,5	6			1 928 403 874	EL	11,5	7,0	7,0	2,0	15,1	10,6	7807078	1000
RB2-KPT	C	8,5			NE	1 928 403 874	EL	11,5	7,0	7,0	2,0	15,1	10,6	7807784	500
RB35	A	26	26			1 928 401 987	RD	28,5	28,5	9,8	-	32,0	32,0	7807228	500
RB35	D	17	15			1 928 401 987	RD	28,5	28,5	9,8	-	32,0	32,0	7807102	1000
RB3-JT	A	4,5	4,5			1928 402 4..	EL	19,0	9,0	13,6	5,0	23,2	13,8	7807779	1000
RB3-JT	A	7,5	6			1928 402 4..	EL	19,0	9,0	13,6	5,0	23,2	13,8	7806870	1000
RB3-JT	A	8,5 UFW					-	-	-	-	-	-	-	9805710	500
RB3-KPT	A	glatki / smooth				1 928 403 966	EL	16,5	7,0	10,3	2,0	20,0	10,6	7807652	1000
RB3-KPT	A	4,5				1 928 403 966	EL	16,5	7,0	10,3	2,0	20,0	10,6	7807623	1000
RB3-KPT	A	7,5	6			1 928 403 966	EL	16,5	7,0	10,3	2,0	20,0	10,6	7807625	1000
RB3-KPT	B	4,5	4,5			1 928 403 966	EL	16,5	7,0	10,3	2,0	20,0	10,6	7807071	1000
RB3-KPT	B	7,5	6			1 928 403 966	EL	16,5	7,0	10,3	2,0	20,0	10,6	7807608	1000
RB3-KPT	C	4,5	4,5			1 928 403 966	EL	16,5	7,0	10,3	2,0	20,0	10,6	7807072	1000
RB3-KPT	C	7,5	6			1 928 403 966	EL	16,5	7,0	10,3	2,0	20,0	10,6	7807609	1000
RB42	A	glatki / smooth				1 928 403 943	-	-	-	-	-	-	-	7807684	500
RB4-JT	B	7,5	6			1 928 402 5..	EL	24,0	9,8	-	5,0	28,5	14,0	7807694	100
RB4-KPT	A	4,5	4,5			1 928 403 736	EL	21,6	9,0	7,0	2,0	25,0	12,6	7807643	1000
RB4-KPT	A	7,5	6			1 928 403 736	EL	21,6	9,0	7,0	2,0	25,0	12,6	7807644	1000
RB4-KPT	B	4,5	4,5			1 928 403 736	EL	21,6	9,0	7,0	2,0	25,0	12,6	7807810	1000
RB4-KPT	B	7,5	6			1 928 403 736	EL	21,6	9,0	7,0	2,0	25,0	12,6	7807776	1000
RB4-KPT	C	4,5	4,5			1 928 403 736	EL	21,6	9,0	7,0	2,0	25,0	12,6	7806864	1000
RB4-KPT	C	7,5	6			1 928 403 736	EL	21,6	9,0	7,0	2,0	25,0	12,6	7807064	1000
RB5	B	4,5	4,5			1 928 A00	RE	17,0	19,5	2,0	2,0	13,6	16,4	7807727	1000
RB5	B	7,5	6			1 928 A00	RE	17,0	19,5	2,0	2,0	13,6	16,4	7807729	1000
RB5-KPT	A	4,5	4,5			1 928 403 738	EL	26,6	9,0	7,0	2,0	30,1	12,6	7807186	1000
RB5-KPT	A	7,5	6			1 928 403 738	EL	26,6	9,0	7,0	2,0	30,1	12,6	7807179	1000
RB5-KPT	B	7,5	6			1 928 403 738	EL	26,6	9,0	7,0	2,0	30,1	12,6	7807073	1000

Utikač Connector	oblik Form	profil NW standardni + UFW Contour NW normal + UFW	AHW AHW	High Flex High Flex	Svojstva Feature	Broj utikača Connector No.	oblik Form	Osnovne dimenzije Ls Main Dimensions Ls	Bs Bs	Hs Hs	Ps Ps	La La	Ba Ba	broj artikla Art. no.	JP kom. PU pcs.
RB5-KPT	C	7,5	6			1 928 403 738	EL	26,6	9,0	7,0	2,0	30,1	12,6	7807074	1000
RB6-KPT	C	7,5	6			1 928 403 740	EL	31,4	8,8	7,4	2,0	35,0	12,5	7807183	1000
RB89	A	22	19			1 928 404 184	RD	-	-	-	-	-	-	7807177	500
RB89	D	26	26			1 928 404 184	RD	-	-	-	-	-	-	7807404	1000
SA21	A	10	8,5			-	RD	19,4	19,4	-	-	21,5	21,5	7807263	100
SA21	A	4,5	4,5			-	RD	19,4	19,4	-	-	21,5	21,5	7807666	1000
SA21	A	8,5				-	RD	19,4	19,4	-	-	21,5	21,5	7807266	500
SA21	A	8,5			NOVO/NEW	-	RD	19,4	19,4	-	-	21,5	21,5	7807665	500
SA21	D	10	8,5			-	RD	19,4	19,4	-	-	21,5	21,5	7807265	100
SA21	D	4,5	4,5			-	RD	19,4	19,4	-	-	21,5	21,5	7807668	1000
SIEM28/52	B			19		V23542-C1028-B300	-	-	-	-	-	-	-	7807180	500
SUM2	A	7,5			45°	6189-0786	-	-	-	-	-	-	-	7807626	1000
TYCO2	A	glatki / smooth				1813029-1	RR	-	-	-	-	-	-	7806629	100
TYCO2	A	4,5	4,5				-	-	-	-	-	-	-	7806073	100
TYCO2-MCP	A	8,5 UFW					-	-	-	-	-	-	-	7806630	n.u./o.r.
TYCO3	B	7,5	6				-	-	-	-	-	-	-	7806072	500
DRUCKFÜHLER-NW 7,5	-	7,5	6				-	-	-	-	-	-	-	7807639	250

2.3

Kutni komad

Angle-piece

profil NW standardni + UFW Contour NW normal + UFW	AHW AHW	Svojstva Feature	upotrebljiv sa zaštitnim pokrovom za utikače useable with connector interface	oblik Form	Osnovne dimenzije Ls Main Dimensions Ls	Bs Bs	Hs Hs	Ps Ps	La La	Ba Ba	broj artikla Art. no.	JP kom. PU pcs.
4,5	4,5		7807656, 7807790 7807652, 7807791 7807651, 7807792 7807695, 7806590	RD	8,8	8,8	-	1,0	10,5	10,5	7807642	1000
7,5	6		7807656, 7807790 7807652, 7807791 7807651, 7807792 7807695, 7806590	RD	8,8	8,8	-	1,0	10,5	10,5	7807690	1000
4,5	4,5		7807656, 7807790 7807652, 7807791 7807651, 7807792 7807695, 7806590	RD	8,8	8,8	-	1,0	10,5	10,5	7806759	1000
4,5	4,5	180°	7807656, 7807790 7807652, 7807791 7807651, 7807792 7807695, 7806590	RD	8,5	8,5	2,5	1,0	11,1	11,1	7807834	100

Zaštita od tekstila

Textile Protection

	stranica		page
Zaštitne trake		**Protective Strips**	
bez flisa, sa zatvaranjem čičkom	112	no Fleece with Velcro fastening	112
sa flisom, sa zatvaranjem čičkom	112	with Fleece, with Velcro fastening	112
sa flisom, sa zatvaranjem čičkom, sa samoljepljivom trakom na poleđini	112	with Fleece, with Velcro fastening, with adhesive strip on the back	112
za visoke temperature	113	Heatreflecting	113
EMC zaštita	113	EMC Protection	113
Upute za upotrebu zaštitnih traka	114	**Assembly Instruction for Protective Strips**	114
Zaštita kontakata	115	**Contact Protection**	115

2.4

Zaštitne trake

Protection Strips

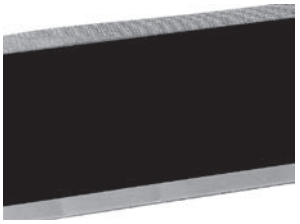

bez flisa / no Fleece

sa flisom / with Fleece

RoHS

Materijal:
1/5: montažna traka:
modificirani akrilat
2: zatvaranje: čičak
3: poliester velur
4: flis: PET

Radna temperatura:
-40°C do 105°C

Izvedbe:
ostale dimenzije na upit

Važna napomena:
Broj artikla se odnosi i na pakiranje u roli i na kontejner.
Prilikom naručivanja naznačite željenu jedinicu pakiranja (kontejner ili rolu)!

Prednost zatvaranje čičkom:
- jednostavno rukovanje
- mogućnost visestrukog korištenja

Svojstva:
- lagano za montažu
- povećana snaga prianjanja
- prema OEM/VDA specifikaciji
- vatrootporne
- najviši nivo zaštite od abrazije
- najviši nivo izolacije zvuka
- ljepljive trake trebaju se stavljati na suhu i čistu površinu, bez masnoća i prašine
- preporučena temperatura pri montaži za sve materijale cca. 15°-20°C

Upotreba:
- zaštita od abrazije i zveckanja unutar karoserije

Tvornička ugradnja:
Audi, BMW, Opel, Škoda, Saab, Porsche, MAN

Material:
1/5: Mounting strip:
Modified Acrylate
2: Closing strip: Velcro
3: Polyester velour
4: Fleece: PET

Temperature range:
-40°C to 105°C

Designs:
Further variations on request

Important Note:
The Art.-No. refer to role and container package units.
Therefore state the requested PU (role or container) when ordering!

Advantage Velcro fastening:
- Easy to handle
- Reclosable

Characteristics:
- Easy mounting
- Higher adhesive force
- acc. to OEM/VDA Spec.
- flame retardant
- highest category for abrasion protection
- highest category for sound insulation
- The adhesive should be applied to a dry clean surface, free of dust and grease
- Recommended process temperature for all materials approx. 15°-20°C

Applications:
- Abrasion- and rattle protection for harnesses in the body section

OEM release:
Audi, BMW, Opel, Skoda, Saab, Porsche, MAN

2.4

bez flisa / no Fleece

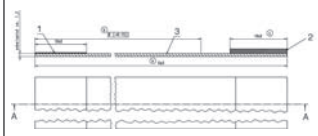

sa flisom / with Fleece

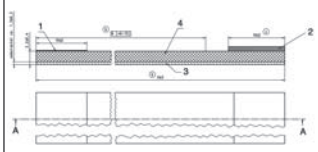

bez flisa, sa zatvaranjem čičkom / no Fleece, with Velcro fastening

širina mm Widths mm	za snop vodiča do Ø mm for cable bundle to Ø mm	broj artikla Art. no.	JP rola m PU role m	JP kontejner m PU Container m
30,0	do/to 4	1882003	250	3750
50,0	> 4 do/to 10	1882005	250	2750
70,0	>10 do/to 15	1882007	250	2250
100,0	>15 do/to 23	1882010	250	1500
120,0	>24 do/to 29	1882012	250	1250
140,0	>23 do/to 35	1882014	250	1250
160,0	>36 do/to 41	1882016	250	1000
180,0	>42 do/to 47	1882018	250	1000
200,0	>48 do/to 53	1882020	250	1000

sa flisom, sa zatvaranjem čičkom / with Fleece, with Velcro fastening

30,0	do/to 4	1880003	200	3000
50,0	> 4 do/to 10	1880005	200	2200
70,0	>10 do/to 15	1880007	200	1800
100,0	>15 do/to 23	1880010	200	1200
120,0	>24 do/to 29	1880012	200	1000
140,0	>23 do/to 35	1880014	200	1000
160,0	>35 do/to 41	1880016	200	800
180,0	>42 do/to 47	1880018	200	800
200,0	>48 do/to 53	1880020	200	800

Rješenja po specifikacijama klijenata / Customer specific Solutions

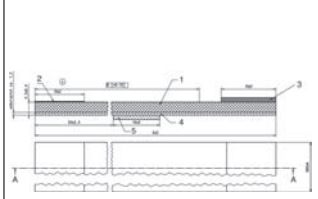

Zaštitne trake sa flisom, sa zatvaranjem čičkom, sa samoljepljivom trakom na poleđini
Protective Strips with fleece, with velcro fastening, with adhesive strip on the back

širina mm Widths mm	dužina mm Length mm	za snop vodiča do Ø mm for cable bundle to Ø mm	broj artikla Art. no.	JP karton kom. PU box pcs.
50,0	580,0	>4 do/to 10	1881500	500

Zaštitne trake za visoke temperature

Protection Strips Heatreflecting

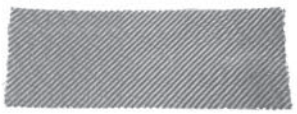

izvana / Outside

iznutra / Inside

RoHS

Materijal:
1: tkanina:
staklena vlakna
2/3: montažna traka/zatvaranje:
modificirani akrilat
4: laminat:
aluminj

Radna temperatura:
-30°C do 240°C
kratkotrajno: 450°C

Izvedbe:
ostale dimenzije na upit

Svojstva:
- ljepljive trake trebaju se stavljati na suhu i čistu površinu, bez masnoća i prašine
- preporučena temperatura pri montaži za sve materijale cca. 15°-20°C

Material:
1: Cloth:
Glass filament cloth
2/3: Mounting strip/Closing strip:
Modified Acrylate
4: Lamination:
Aluminium

Temperature range:
-30°C to 240°C
short-term: 450°C

Designs:
Others on request

Characteristics:
- The adhesive should be applied to a dry clean surface, free of dust and grease
- Recommended process temperature for all materials approx. 15°-20°C

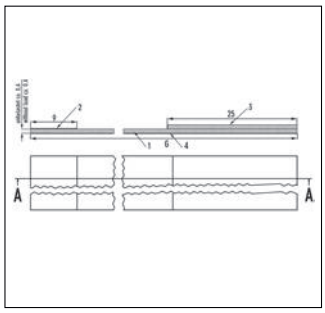

tip Type	za snop vodiča do Ø mm for cable bundle to Ø mm	broj artikla Art. no.	JP PU
45,0	> 4 do/to 10	1894005	na upit / on request
70,0	>10 do/to 15	1894007	na upit / on request
95,0	>15 do/to 23	1894010	na upit / on request
140,0	>23 do/to 35	1894014	na upit / on request

Zaštitne trake za EMC zaštitu

Protection Strips for EMC Protection

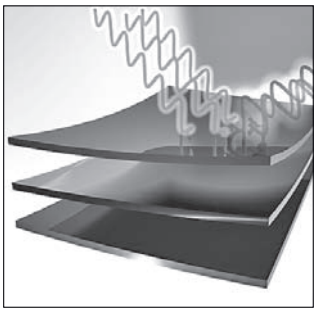

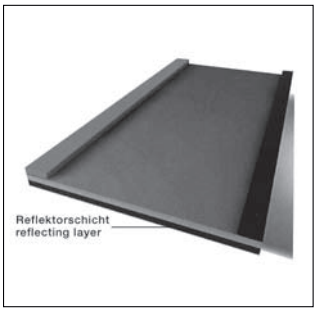

RoHS

Svojstva:
- Visoke zaštitne vrijednosti protiv djelovanja EM valova postignute su laminiranjem refleksnim slojem integriranim u tekstilnu traku.
- Postignute vrijednosti prigušivanja mjerene su prema ASTM D 4935-89 i IEEE 299-1997 u HF, Institutu mikrovalne i radarske tehnologije Univerziteta Oružanih snaga.
- Postignute zaštitne vrijednosti dostižu do 99,99 % u poljima visokih frekvencija.

Features:
- High screen values against radiation can be achieved by laminating a reflecting layer into the cable protection system.
- The achievable damping values were measured in accordance with ASTM D 4935-89 and IEEE 299-1997 at the HF, Microwave and Radar Technology Institute of the University of the Armed Forces.
- The achievable screen values reached up to 99,99 % in high frequency fields.

za snop vodiča do Ø mm for cable bundle to Ø mm	broj artikla Art. no.	JP PU
na upit / on request	na upit / on request	na upit / on request

2.4

Upute za upotrebu zaštitnih traka

Assembly Instruction for Protection Strips

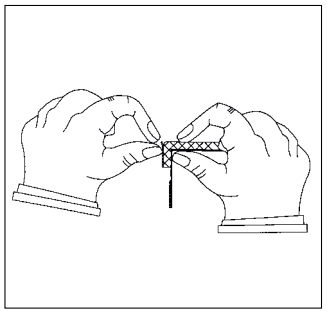

1 Držite zaštitnu traku u jednoj ruci.
2 Presavinite zaštitnu traku sa samoljepljivom trakom prema dolje.
3 Palcem druge ruke odstranite zaštitni papir.
4 **Sklopite zaštitnu traku bez napinjanja.**
5 Lagano stisnite traku s ljepljivom površinom.

1 Hold protection strip in one hand.
2 Bend protection strip with adhesive tape downwards.
3 Remove protective paper with the thumb of the other hand.
4 **Assemble protection strip without tension!**
5 Press the closure adhesive tape firmly.

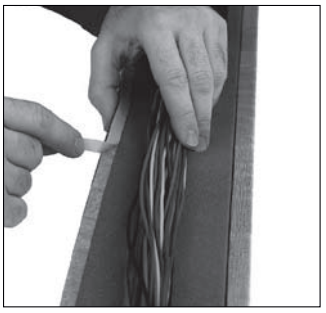

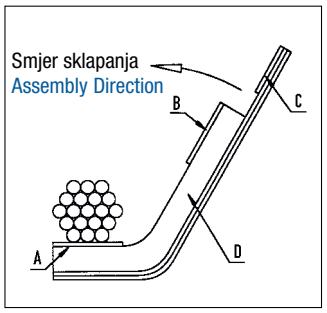

A montažna traka
B pomoćna samoljepljiva traka
C samoljepljiva traka za zatvaranje ili zatvaranje čičkom
D PUR-pjena

A assembly - adhesive tape
B relief - adhesive tape
C closure - adhesive tape or Velcro-fastening
D PUR-foam

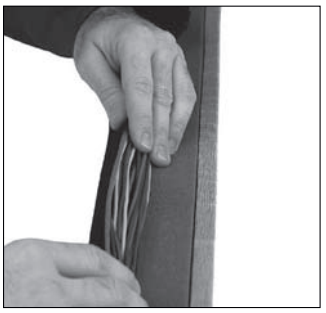

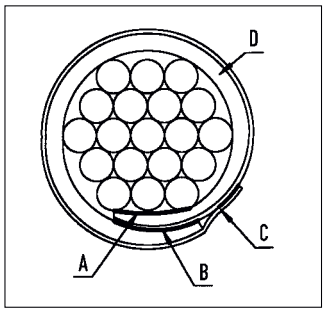

Važne napomene:

– Upotrebljavati samo pri sobnim temeraturama.
– Zaštitni papir uklonite neposredno prije lijepljenja.
– Održavajte samoljepljivu traku i vodiče suhima i bez masnoća.
– Ne dirajte samoljepljivu traku.
– Oba kraja pjene trebaju se preklapati prilikom sklapanja.

Zaštitne trake sa ljepilom mogu se koristiti samo jednokratno!

Important Remarks:

– Process at room temperature only
– Remove protective paper right before sticking together
– Keep adhesive tape and harness dry and free from grease
– Do not touch adhesive tape
– Both foam ends have to overlap during their assembly

The protection strip with adhesive can only be used once!

2.4

Zaštita kontakata

Contact Protection

otvoreno / open

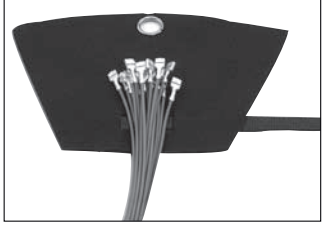

zatvoreno / closed

RoHS

Materijal:
poliestervelur visoko otporan na abraziju

Svojstva:
- lagano za montažu zbog vezice na čičak
- jednostavno rukovanje
- višestruko korištenje do 250 puta
- sa ušicom za vješanje

Upotreba:
- Zaštita montiranih vodiča prilikom sklapanja

Material:
high abrasion-proof polyestervelour

Characteristics:
- Easy assembling through velcro cable-tie
- Easy to handle
- re-useable up to 250 times
- with eyelet for hanging up

Applications:
- Protection of mounted wires during Assembly

veličina 1 / Size 1

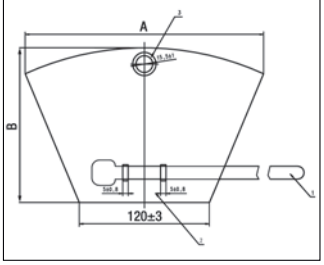

veličina 2 / Size 2

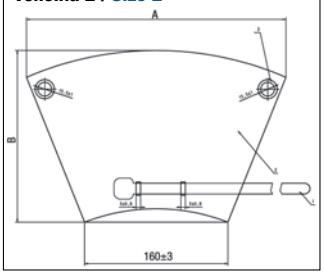

tip Type	za snop vodiča mm max. for cable bundle mm max.	A mm A mm	B mm B mm	broj artikla crna Art. no. black	JP kom. PU pcs.
veličina 1 / Size 1	35,0	220,00	143,00	1892900	500
veličina 2 / Size 2	50,0	290,00	192,00	1892901	360

2.4

2.4

Pribor

	stranica
Redukcije	118
Spojnice	119
Pričvršćivanje:	
Držač rebrastih cijevi	120
Cijevne obujmice	121
Obujmice krajnje	121
Cijevne obujmice sa čepom	122
Cijevne obujmice sa montažnom pločicom i metalnim umetkom	123
Obujmice	124
Tuljak za ojačanje	125
Čep/Gumeni završetak	126
Kabelske vezice:	
Euro-kabelske vezice	127
UV-stabilne kabelske vezice	128

Accessories

	page
Reducers	118
Connectors	119
Fixings:	
Corrugated Tube Holder	120
Tube Clips	121
End Clips	121
Clips + Mount	122
Clip with mounting plate and metal insert	123
Clamps	124
Stabilizing Ferrules	125
End cap/End sleeve	126
Cable ties:	
Euro Cable-ties	127
UV-stabilised Cable ties	128

Redukcije

Reducers

RoHS

Materijal:
poliamid 66
poliamid 46 na upit
* Elastomer na upit

Radna temperatura:
-40°C do 135°C
500 h: -40°C do 150°C

Boje/izvedbe:
• crna

Upotreba:
za postavljanje u rebraste cijevi, razdjelnike, spojnice

Material:
Polyamide 66
Polyamide 46 on request
* Elastomere on request

Temperature range:
-40°C to 135°C
500 h: -40°C to 150°C

Colour(s)/Designs:
• Black

Applications:
To place in Corrugated tubes, Manifolds, Connectors

oblik A / Form A

oblik B / Form B

oblik C / Form C

oblik D / Form D

oblik A / Form A

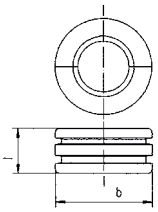

oblik Form	odgovara za profil rebraste cijevi NW standardni + UFW suitable for corrugated tube profile NW normal + UFW	AHW AHW	b mm b mm	l mm l mm	broj artikla Art. no.	JP kom. PU pcs.
A	8,5 → 4,5		11,7	9,0	7807270	2000
A	10 → 4,5	8,5 - 4,5	12,7	9,0	7807272	2000
A	10 → 7,5	8,5 - 6	13,1	7,5	7807276	2000
A	13 → 10	11 - 8,5	16,0	7,5	7807280	2000
A	13 → 7,5	11 - 6	16,0	7,5	7807278	500
A	17 → 13	15 - 11	21,3	8,5	7807283	500
A	17 → 13	15 - 11	21,3	19,0	7807320	na upit / on request
A	26 → 17	26 - 15	31,7	19,2	7807339	na upit / on request
A	22 → 17	19 - 15	25,8	9,5	7807282	2000
A *)	17 → Ø9	15 - Ø9	21,5	8,0	7807605	na upit / on request

oblik B / Form B

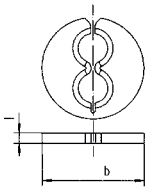

B	17 → 2 x 4,5	15 - 2 x 4,5	21,3	2,5	7807289	500
B	22 → 2 x 7,5	19 - 2 x 6	25,0	2,6	7807290	1000
B	22 → 8,5 - 7,5		25,0	2,6	7807291	1000
B	22 → 2 x 4,5	19 - 2 x 4,5	25,9	2,6	7807187	1000
B	22 → 7,5 - 4,5	19 - 6 - 4,5	25,9	2,6	7807765	na upit / on request

oblik C / Form C

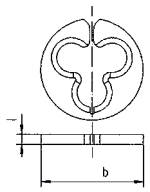

C	17 → 3 x 4,5	15 - 3 x 4,5	21,3	2,5	7807293	500
C	22 → 2 x 4,5 - 7,5	19 - 2 x 4,5 - 6	25,9	2,6	7807697	na upit / on request
C	22 → 2 x 7,5 - 4,5	19 - 2 x 6 - 4,5	25,9	2,6	7807761	na upit / on request
C	22 → 3 x 4,5	19 - 3 x 4,5	25,9	2,6	7807698	na upit / on request
C	22 → 3 x 7,5	19 - 3 x 6	25,9	2,6	7807292	1000
C	29 → 3 x 8,5		34,8	2,3	7807295	1000

oblik D / Form D

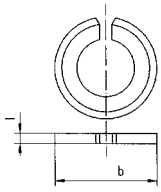

D	10 → 8,5		13,1	2,1	7807288	500
D	17 → 13	15 - 11	21,4	2,5	7807296	1000
D	22 → 13	19 - 11	25,9	2,6	7807294	1000
D	26 → 22	26 - 19	31,7	2,4	7807654	500
D	10 → 4,5	8,5 - 4,5	13,2	2,1	7807299	1000
D	10 → 7,5	8,5 - 6	13,2	2,1	7807297	na upit / on request
D	14 → 13	X - 11	18,6	2,0	7807766	na upit / on request

Spojnice

Connectors

spojnica ravna
Connector straight

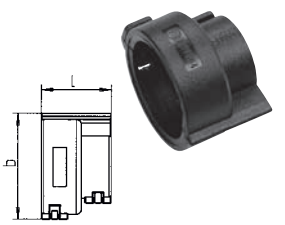

spojnica kutna 90°
Connector 90°-angle

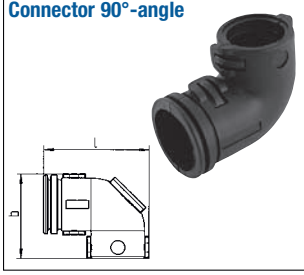

RoHS

Materijal:
poliamid 66
poliamid 46 na upit

Radna temperatura:
-40°C do 135°C
500 h: -40°C do 150°C

Boje/izvedbe:
- crna
- obuhvat izvana

Material:
Polyamide 66
Polyamide 46 on request

Temperature range:
-40°C to 135°C
500 h: -40°C to 150°C

Colour(s)/Designs:
- Black
- Outside gripping

spojna čahura /
Connecting sleeve

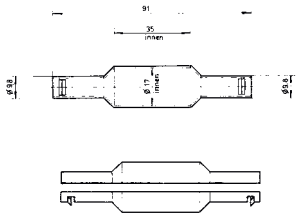

Izvedba	obuhvat izvana	zabravljivanje obuhvatom	glatki	odgovara za profil rebraste cijevi NW Normal +UFW	AHW	samo-zatvarajući L-Profil	zabravlju-jući V-Profil	b mm	l mm	broj artikla	JP kom.
				suitable for corrugated tube profile NW							
Design	outside gripping	Clamp lock	smooth	normal +UFW	AHW	self closing L-Profile	lockable V-Profile	b mm	l mm	Art. no.	PU pcs.
Spojnica / Connector											
ravna / straight	✓	✓		22-13	19-11	22-13	19-11	32,4	21,0	7807604	1000
kutna 90°/ 90° angle	✓	✓		8,5-8,5		8,5-8,5		32,4	30,8	7807397	500
kutna 90°/ 90° angle	✓	✓		10-10	8,5-8,5	10-10	8,5-8,5	28,0	35,2	7807398	100
kutna 90°/ 90° angle	✓	✓		13-13	11-11	13-13	11-11	30,5	37,5	7807399	500
kutna 90°/ 90° angle	✓	✓	✓	13	11	13	11	30,5	37,5	7807395	500
kutna 90°/ 90° angle	✓	✓		17-17	15-15	17-17	15-15	38,3	43,7	7807400	500
kutna 90°/ 90° angle	✓	✓		22-22	19-19	22-22	19-19	44,3	49,1	7807401	250
kutna 90°/ 90° angle	✓	✓		26-17	26-15	26-17	26-15	42,2	49,1	9807391	500
kutna 90°/ 90° angle	✓	✓		26-22	26-19	26-22	26-19	42,2	49,1	7807393	1000
kutna 90°/ 90° angle	✓	✓		26-26	26-26	26-26	26-26	48,3	54,3	7807403	250
Spojna čahura / Connecting sleeve											
sa obuhvatnim dijelom/ with clamping space	✓	✓		10		10				9805591	100

Držač rebrastih cijevi

Corrugated Tube Holder

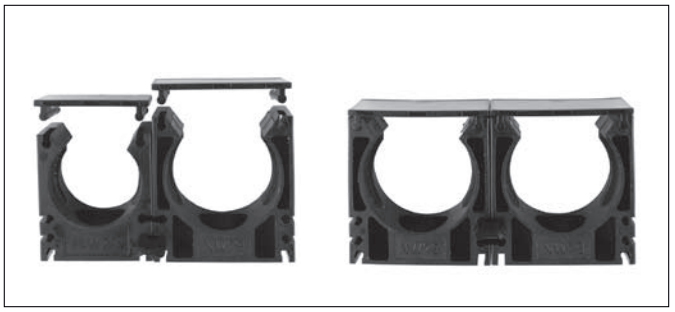

RoHS

Materijal:
poliamid PA6, prema UL94: V-2

Radna temperatura:
-40°C do 105°C
kratkotrajno: 150°C

Boje/izvedbe:
- crna
- siva

Svojstva:
- za montažu u seriji
- složivo u niz ili jedni na druge
- za brzu, laku i sigurnu montažu
- rebrasto učvršćivanje kao zaštita od izvlačenja
- rebrasta cijev je okretna oko svoje osi
- bez halogena

Upotreba:
- izrada strojeva i aparata
- robotika
- autoindustrija
- proizvodnja šinskih vozila

Material:
Polyamide PA6, V-2 accord. to UL94

Temperature range:
-40°C to 105°C
short-term: 150°C

Colour(s)/Designs:
- Black
- Grey

Characteristics:
- for series mounting
- stackable
- for quick, easy and safe mounting
- rib fixation as traction relief
- corrugated tube is twistable arround its own axis
- free of halogen

Applications:
- mechanical engineering and facility constructions
- robot engineering
- automotive industry
- railway engineering

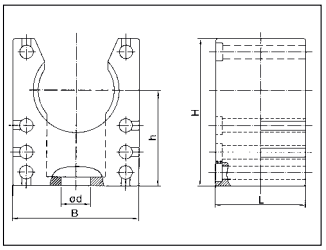

Držač rebrastih cijevi bez poklopca / Corrugated Tube Holder no cap

za NW for NW	B mm B mm	H mm H mm	h mm h mm	L mm L mm	d mm d mm	broj artikla crna Art. no. black	broj artikla siva Art. no. grey	JP kom. PU pcs.
7,5	20,0	18,0	12,0	20,0	4,2	8221050	8221150	100
10	20,0	23,0	15,5	20,0	5,5	8221051	8221151	100
12+13	22,0	26,0	17,1	20,0	5,5	8221052	8221152	50
14+16	28,0	33,0	21,1	20,0	6,5	8221053	8221153	50
17	28,0	33,0	21,4	20,0	6,5	8221054	8221154	50
23	35,0	40,0	24,8	20,0	6,5	8221055	8221155	50
29	43,0	45,0	26,8	20,0	6,5	8221056	8221156	30
37	54,0	53,0	30,8	20,0	6,5	8221057	8221157	20
50	68,0	66,0	37,8	20,0	6,5	8221058	8221158	20

Poklopac

za držač rebrastih cijevi

Cap

for Corrugated Tube Holder

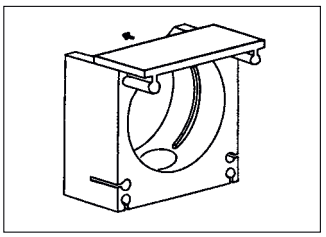

za NW for NW	broj artikla crna Art. no. black	broj artikla siva Art. no. grey	JP kom. PU pcs.
7,5+10	8221250	8221350	100
12+13	8221251	8221351	50
14+16+17	8221252	8221352	50
23	8221253	8221353	50
29	8221254	8221354	30
37	8221255	8221355	20
50	8221256	8221356	20

2.5

Spojnica

za držač rebrastih cijevi

Connecting Piece

for Corrugated Tube Holder

Za spajanje držača rebrastih cijevi u niz ili jednih na druge.

To line or staple corrugated tube holders

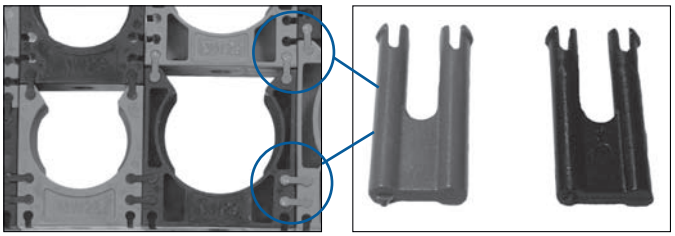

za NW for NW	broj artikla crna Art. no. black	broj artikla siva Art. no. grey	JP kom. PU pcs.
7,5 - 50	8221400	8221401	100

Cijevne obujmice
Obujmice krajnje

Tube Clips
End Clips

RoHS

Materijal:
poliamid 66
poliamid 46 na upit

Radna temperatura:
-40°C do 135°C
500 h: -40°C do 150°C

Boje/izvedbe:
- crna
- siva

Svojstva:
- za fleksibilne instalacije
- optimalni spoj za rebraste cijevi

Upotreba:
- za pričvršćivanje rebrastih cijevi ili vodiča na karoseriju itd.

Material:
Polyamide 66
Polyamide 46 on request

Temperature range:
-40°C to 135°C
500 h: -40°C to 150°C

Colour(s)/Designs:
- Black
- Grey

Characteristics:
- For flexible installation
- Optimal connection for corrugated tubes

Applications:
- To fix corrugated tubes or harness on body etc.

cijevna obujmica / Tube Clip

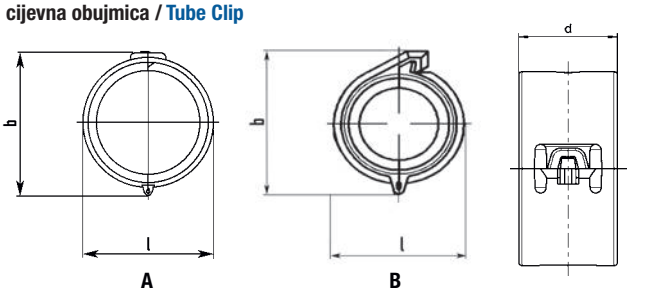

obujmica krajnja / End Clip

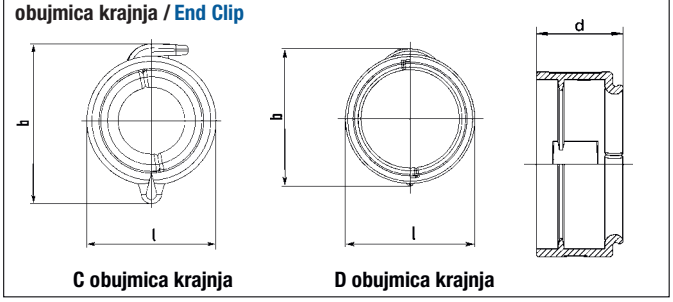

oblik	boja	način spajanja	klizno umetanje na postolje	odgovara za profil rebraste cijevi NW standardni + UFW	AHW	samo-zatvarajući L-Profil	zabravlju-jući V-Profil	h mm	b mm	l mm	d mm	broj artikla	JP kom.
				suitable for corrugated tube profile NW									
Form	Colour	plug system	plug socket slide in	normal + UFW	AHW	self closing L-Profile	lock-able V-Profile	h mm	b mm	l mm	d mm	Art. no.	PU pcs.
A	crna / black	cijevna obujmica / Tube Clip		4,5	4,5	4,5			13,0	9,4	13,0	9805940	5000
A	crna / black	cijevna obujmica / Tube Clip		7,5	6	7,5			15,8	12,2	13,0	9805941	5000
A	crna / black	cijevna obujmica / Tube Clip		10	8,5	10	8,5		18,9	15,4	13,0	9805942	5000
A	crna / black	cijevna obujmica / Tube Clip		13	11	13	11		21,6	18,3	13,0	9805943	2500
A	siva / grey	cijevna obujmica / Tube Clip		13	11	13	11		21,6	18,3	13,0	9805951	5000
A	crna / black	cijevna obujmica / Tube Clip		14					24,6	21,3	13,0	9805949	5000
A	siva / grey	cijevna obujmica / Tube Clip		14					24,6	21,3	13,0	9805959	5000
A	crna / black	cijevna obujmica / Tube Clip		17	15	17	15		27,1	23,6	14,5	9805944	5000
A	crna / black	cijevna obujmica / Tube Clip	✓	17	15	17	15		27,4	23,8	22,0	9805908	1000
A	crna / black	cijevna obujmica / Tube Clip		22	19	22	19		31,6	28,3	16,0	9805945	4000
A	crna / black	cijevna obujmica / Tube Clip	✓	22	19	22	19		31,9	28,3	22,0	9805907	1000
A	crna / black	cijevna obujmica / Tube Clip			23HF				35,0	31,8	18,0	9805955	1000
A	crna / black	cijevna obujmica / Tube Clip		26	26	26	26		37,7	34,4	19,0	9805946	1000
A	crna / black	cijevna obujmica / Tube Clip		29		29			41,1	37,5	19,0	9805947	1000
B	crna / black	cijevna obujmica / Tube Clip		8,5		8,5			18,3	15,6	12,7	9805939	5000
C	crna / black	obujmica krajnja / End Clip		4,5	4,5	4,5			12,8	9,8	10,1	9805935	1000
C	crna / black	obujmica krajnja / End Clip		7,5	6	7,5			15,6	12,6	10,5	9805936	1000
D	crna / black	obujmica krajnja / End Clip		22	19	22	19		32,3	28,3	13,3	9805938	1000

Obujmice sa čepom

Clips Mounts

RoHS

Materijal:
poliamid 66
poliamid 46 na upit

Radna temperatura:
-40°C do 135°C
500 h: -40°C do 150°C

Boje/izvedbe:
- crna

Svojstva:
- za fleksibilne instalacije
- optimalni spoj za rebraste cijevi

Upotreba:
- za pričvršćivanje rebrastih cijevi ili vodiča na karoseriju itd.

Material:
Polyamide 66
Polyamide 46 on request

Temperature range:
-40°C to 135°C
500 h: -40°C to 150°C

Colour(s)/Designs:
- Black

Characteristics:
- For flexible installation
- Optimal connection for corrugated tubes

Applications:
- To fix corrugated tubes or harness on body etc.

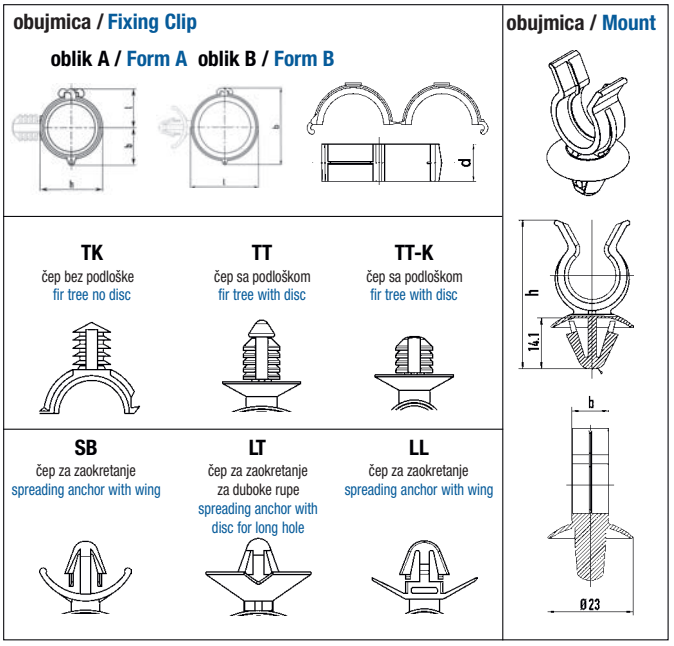

oblik	način spajanja		debljina lima mm	promjer rupe	odgovara za profil rebraste cijevi NW stan-dardni + UFW	AHW	samo-zatvarajući L-Profil	zabravlju-jući V-Profil	h mm	b mm	l mm	d mm	broj artikla	JP kom.
Form	plug system		metal sheet thickness mm	drill hole diameter mm	suitable for corrugated tube profile NW normal + UFW	AHW	self closing L-Profile	lock-able V-Profile	h mm	b mm	l mm	d mm	Art. no.	PU pcs.
A	obujmica / Fixing Clip		-	-	4,5	4,5	4,5		10,2	5,5	7,2	13,0	9805917	1000
A	obujmica / Fixing Clip		-	-	7,5	6	7,5		13,2	7,0	8,7	13,0	9805911	1000
A	obujmica / Fixing Clip		-	-	8,5		8,5		14,7	7,8	9,5	13,0	9805912	1000
A	obujmica / Fixing Clip		-	-	10	8,5	10	8,5	15,8	8,3	10,0	13,0	9805913	1000
A	obujmica / Fixing Clip		-	-	13	11	13	11	19,0	10,0	11,7	13,0	9805914	1000
A	obujmica / Fixing Clip		-	-	17	15	17	15	24,0	12,0	14,0	13,0	9805925	1000
A	obujmica / Fixing Clip		-	-	22	19	22	19	28,4	14,6	16,2	13,0	9805916	1000
A	obujmica / Fixing Clip	TK	0,8-5	6,5	4,5	4,5	4,5			13,8	9,8	13,0	9805310	1000
A	obujmica / Fixing Clip	TK	0,8-5	6,5	7,5	6	7,5			16,6	12,6	13,0	9805311	1000
A	obujmica / Fixing Clip	TK	0,8-5	6,5	8,5		8,5			18,4	14,4	13,0	9805312	1000
A	obujmica / Fixing Clip	TK	0,8-5	6,5	10	8,5	10	8,5		19,6	15,6	13,0	9805313	1000
A	obujmica / Fixing Clip	TK	0,8-5	6,5	13	11	13	11		22,5	18,5	13,0	9805314	1000
B	obujmica / Fixing Clip	TT-K	0,8-5	6,5	10	8,5	10	8,5		20,4	16,2	14,9	9805980	5000
B	obujmica / Fixing Clip	TT-K	0,8-5	6,5	10	8,5	10	8,5		19,6	15,6	13,0	9805985	5000
B	obujmica / Fixing Clip	TT-K	0,8-5	6,5	13	11	13	11		22,5	18,5	13,0	9805981	1000
B	obujmica / Fixing Clip	LT	0,5-3	6,2 x 12,2		23HF						13,0	9805962	n.u./o.r.
B	obujmica / Fixing Clip	SB	0,5-3	6,5		23HF						13,0	9805956	1000
B	obujmica / Fixing Clip	TT	0,8-6	6,5		23HF				36,1	31,6	13,0	9805900	1000
B	obujmica / Fixing Clip	TT-K	0,8-5	6,5		23HF				36,1	31,6	13,0	9805978	1000
B	obujmica / Fixing Clip	SB	0,5-3	6,5	4,5	4,5	4,5					13,0	9805961	1000
B	obujmica / Fixing Clip	TT	0,8-6	6,5	4,5	4,5	4,5			14,3	9,8	13,0	9805960	1000
B	obujmica / Fixing Clip	TT-K	0,8-5	6,5	4,5	4,5	4,5			14,3	9,8	13,0	9805965	1000
B	obujmica / Fixing Clip	SB	0,5-3	6,5	7,5	6	7,5			17,1	12,6	13,0	9805977	1000
B	obujmica / Fixing Clip	TT	0,8-6	6,5	7,5	6	7,5			17,1	12,6	13,0	9805963	1000
B	obujmica / Fixing Clip	TT-K	0,8-5	6,5	7,5	6	7,5			17,1	12,6	13,0	9805975	1000
B	obujmica / Fixing Clip	TT-K	0,8-5	8	7,5	6	7,5			17,1	12,6	13,0	9805979	1000
	obujmica / Fixing Clip	LL	0,8-5	8 x 15	10	8,5	10	8,5		20,4	16,2	14,9	9805976	1000
Obujmica sa čepom / Mount														
ST	obujmica sa čepom / Mount	ST 8,5	2,0-3,2	8,8-11,0	4,5	4,5	4,5		28,2	9,6			8713195	1000
ST	obujmica sa čepom / Mount	ST 8,5	2,0-3,2	8,8-11,0	8,5		8,5		34,7	9,9			8713196	1000
ST	obujmica sa čepom / Mount	ST 8,5	2,0-3,2	8,8-11,0	10	8,5	10	8,5	37,2	9,9			8713190	1000
ST	obujmica sa čepom / Mount	ST 8,5	2,0-3,2	8,8-11,0	13	11	13	11	41,1	9,9			8713189	1000
ST	obujmica sa čepom / Mount	ST 8,5	2,0-3,2	8,8-11,0	17	15	17	15	48,9	11,8			8713188	1000
ST	obujmica sa čepom / Mount	ST 8,5	2,0-3,2	8,8-11,0	22	19	22	19	48,8	11,9			8713187	1000

Obujmice
sa montažnom pločicom i metalnim umetkom

RoHS

Materijal:
poliamid 46
poliamid 66

Radna temperatura:
poliamid 46: -40°C do 150°C
500 h: -40°C do 175°C

poliamid 66: -40°C do 135°C
500 h: -40°C do 150°C

Boje/izvedbe:
- crna

Svojstva:
- za fleksibilne instalacije
- optimalni spoj za rebraste cijevi
- visoki zatezni moment

Upotreba:
- za pričvršćivanje rebrastih cijevi ili vodiča na karoseriju itd.

Clips
with mounting plate and metal insert

Material:
Polyamide 46
Polyamide 66

Temperature range:
Polyamide 46: -40°C to 150°C
500 h: -40°C to 175°C

Polyamide 66: -40°C to 135°C
500 h: -40°C to 150°C

Colour(s)/Designs:
- Black

Characteristics:
- For flexible installation
- Optimal connection for corrugated tubes
- high tightening torque

Applications:
- To fix corrugated tubes or harness on body etc.

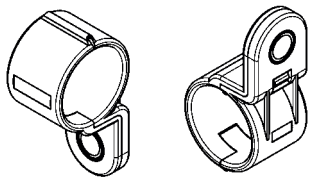

glatki
primjena za glatke cijevi + zrak i tekućine
smooth
for smooth tube + air & fluid applications

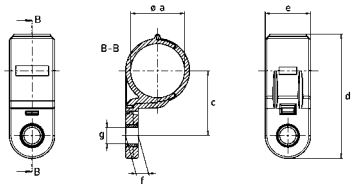

sa unutranjim profilom
za rebraste cijevi
with inner contour
for corrugated tube

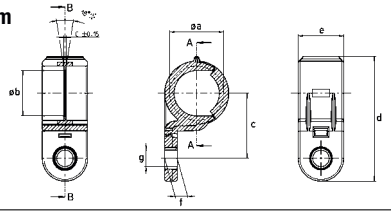

način spajanja / plug system	odgovara za profil rebraste cijevi NW / suitable for corrugated tube profile NW: standardni + UFW / normal + UFW	AHW / AHW mm	samo-zatvarajući L-Profil / self closing L-Profile	zabravlju-jući V-Profil / lock-able V-Profile	g promjer rupe Ø mm / g drill hole diameter	a mm / a mm	b mm / b mm	c mm / c mm	d mm / d mm	e mm / e mm	f mm / f mm	Broj artikla / Art. no.	JP kom. / PU pcs.
poliamid 46, glatki / Polyamide 46, smooth													
obujmica / Fixing Clip - KPL	4,5	4,5	4,5		6,5	7,4	-	18,7	35,2	18,0	5,0	9805405	500
obujmica / Fixing Clip - KPL	7,5	6	7,5		6,5	10,2	-	20,1	38,0	18,0	5,0	9805406	500
obujmica / Fixing Clip - KPL	10	8,5	10	8,5	6,5	13,2	-	21,6	41,0	18,0	5,0	9805407	500
obujmica / Fixing Clip - KPL	13	11	13	11	6,5	16,1	-	23,1	43,9	18,0	5,0	9805408	500
obujmica / Fixing Clip - KPL	17	15	17	15	6,5	21,4	-	25,7	49,2	18,0	5,0	9805409	500
obujmica / Fixing Clip - KPL	22	19	22	19		25,9	-	28,0	53,7	18,0	5,0	9805410	500
poliamid 46, sa unutarnjim profilom / Polyamide 46, with inner contour													
obujmica / Fixing Clip - KPL	4,5	4,5	4,5		6,5	7,4	5,7	18,7	35,2	18,0	5,0	9805411	a.a./
obujmica / Fixing Clip - KPL	7,5	6	7,5		6,5	10,2	7,5	20,1	28,0	18,0	5,0	9805412	a.a./
obujmica / Fixing Clip - KPL	10	8,5	10	8,5	6,5	13,2	11,1	21,6	41,0	18,0	5,0	9805413	500
obujmica / Fixing Clip - KPL	13	11	13	11	6,5	16,1	14,1	23,1	43,9	18,0	5,0	9805414	500
obujmica / Fixing Clip - KPL	17	15	17	15	6,5	21,4	17,9	25,7	49,2	18,0	5,0	9805415	500
obujmica / Fixing Clip - KPL	22	19	22	19	6,5	25,9	22,7	28,0	53,7	18,0	5,0	9805416	500
poliamid 66, glatki / Polyamide 66, smooth													
obujmica / Fixing Clip - KPL	4,5	4,5	4,5		6,5	10,2	-	20,1	38,0	18,0	5,0	9805439	500
obujmica / Fixing Clip - KPL	7,5	6	7,5		6,5	13,2	-	21,6	41,0	18,0	5,0	9805440	500
obujmica / Fixing Clip - KPL	10	8,5	10	8,5	6,5	16,1	-	23,1	43,9	18,0	5,0	9805441	500
obujmica / Fixing Clip - KPL	13	11	13	11	6,5	21,4	-	25,7	49,2	18,0	5,0	9805442	500
obujmica / Fixing Clip - KPL	17	15	17	15	6,5	25,9	-	29,0	56,2	21,0	5,0	9805443	250
obujmica / Fixing Clip - KPL	22	19	22	19	6,5	31,8	-	31,9	62,1	21,0	5,0	9805444	250
obujmica / Fixing Clip - KPL	4,5	4,5	4,5		8,5	10,2	-	20,1	38,0	18,0	5,0	9805453	500
obujmica / Fixing Clip - KPL	7,5	6	7,5		8,5	13,2	-	21,6	41,0	18,0	5,0	9805454	500
obujmica / Fixing Clip - KPL	10	8,5	10	8,5	8,5	16,1	-	23,1	43,9	18,0	5,0	9805455	500
obujmica / Fixing Clip - KPL	13	11	13	11	8,5	21,4	-	25,7	49,2	18,0	5,0	9805456	500
obujmica / Fixing Clip - KPL	17	15	17	15	8,5	25,9	-	29,0	56,2	21,0	5,0	9805457	250
obujmica / Fixing Clip - KPL	22	19	22	19	8,5	31,8	-	31,9	62,1	21,0	5,0	9805458	250
poliamid 66, sa unutarnjim profilom / Polyamide 66, with inner contour													
obujmica / Fixing Clip - KPL	4,5	4,5	4,5		6,5	7,4	5,7	18,7	35,2	18,0	5,0	9805431	500
obujmica / Fixing Clip - KPL	7,5	6	7,5		6,5	10,2	7,5	20,1	38,0	18,0	5,0	9805432	500
obujmica / Fixing Clip - KPL	8,5				6,5	12,0	9,4	21,0	39,8	18,0	5,0	9805476	500
obujmica / Fixing Clip - KPL	10	8,5	10	8,5	6,5	13,2	11,1	21,6	41,0	18,0	5,0	9805433	500
obujmica / Fixing Clip - KPL	13	11	13	11	6,5	16,1	14,1	23,1	43,9	18,0	5,0	9805434	500
obujmica / Fixing Clip - KPL	17	15	17	15	6,5	21,4	17,9	25,7	49,2	18,0	5,0	9805435	500
obujmica / Fixing Clip - KPL	22	19	22	19	6,5	25,9	22,7	29,0	56,2	21,0	5,0	9805436	250
obujmica / Fixing Clip - KPL	26	26			6,5	31,8	27,4	31,9	62,1	21,0	5,0	9805437	250
obujmica / Fixing Clip - KPL	4,5	4,5	4,5		8,5	7,4	5,7	18,7	35,2	18,0	5,0	9805445	
obujmica / Fixing Clip - KPL	7,5	6	7,5		8,5	10,2	7,5	20,1	38,0	18,0	5,0	9805446	500
obujmica / Fixing Clip - KPL	8,5				8,5	12,0	9,4	21,0	39,8	18,0	5,0	9805477	
obujmica / Fixing Clip - KPL	10	8,5	10	8,5	8,5	13,2	11,1	21,6	41,0	18,0	5,0	9805447	500
obujmica / Fixing Clip - KPL	13	11	13	11	8,5	16,1	14,1	23,1	4,9	18,0	5,0	9805448	500
obujmica / Fixing Clip - KPL	17	15	17	15	8,5	21,4	17,9	25,7	49,2	18,0	5,0	9805449	500
obujmica / Fixing Clip - KPL	22	19	22	19	8,5	25,9	22,7	29,0	56,2	21,0	5,0	9805450	250
obujmica / Fixing Clip - KPL	26	26			8,5	31,8	27,4	31,9	62,1	21,0	5,0	9805451	250

Obujmice

Clamps

RoHS

Materijal:
poliacetal POM

Radna temperatura:
-40°C do 110°C

Boje/izvedbe:
• crna

Svojstva:
• gorivost prema UL 94 HB

Material:
Polyacetalresin POM

Temperature range:
-40°C to 110°C

Colour(s)/Designs:
• Black

Characteristics:
• Burning behaviour acc. to UL 94 HB

obujmica
Fixing clamp

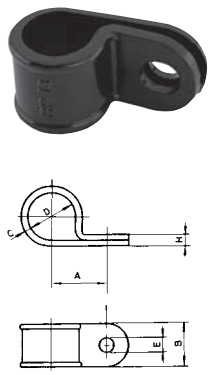

obujmica
Clamping clip

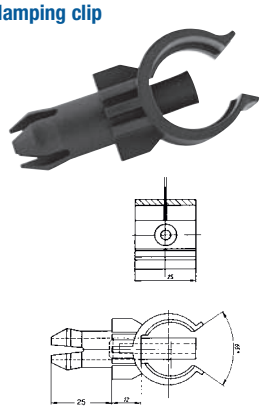

obujmica višestruka
Multiple cable clamp

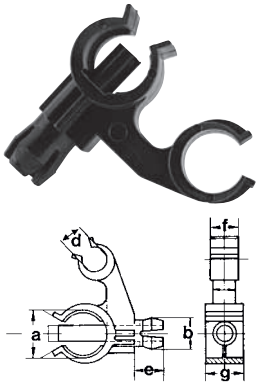

obujmica sa razmakom
Distance clamp

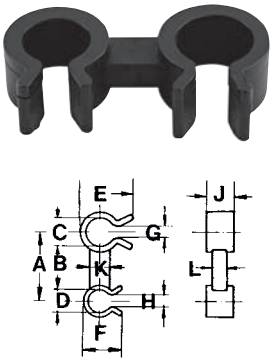

tip	za debljinu lima mm	odgovara za profil rebraste cijevi NW stan-dardni + UFW	AHW	samo-zatvarajući L-Profil	zabravlju-jući V-Profil	a mm	b mm	c mm	d mm	e mm	f mm	g mm	h mm	j mm	k mm	l mm	broj artikla	JP kom.
Type	for metal sheet thickness mm	suitable for corrugated tube profile NW normal + UFW	AHW	self closing L-Profile	lockable V-Profile	a mm	b mm	c mm	d mm	e mm	f mm	g mm	h mm	j mm	k mm	l mm	Art. no.	PU pcs.
Obujmica / Fixing clamp																		
RP 6						14,0	16,0	2,0	5,7-6,3	6,6			4,0				8211060	1
RP 8						15,0	16,0	2,0	7,6-8,3	6,6			4,0				8211086	1
RP 9		7,5	6	7,5		15,0	16,0	2,0	8,6-9,3	6,6			4,0				8211094	1
RP 10						16,0	16,0	2,0	9,5-10,3	6,6			4,0				8211108	1
RP 11						16,0	16,0	2,0	10,5-11,3	6,6			4,0				8211116	1
RP 12		8,5		8,5		17,0	16,0	2,0	11,5-12,3	6,6			4,0				8211124	1
RP 13		10	8,5	10	8,5	17,0	16,0	2,0	12,3-13,3	6,6			4,0				8211000	1
RP 14						18,0	16,0	2,5	13,5-14,3	6,6			5,0				8211140	1
RP 15						19,0	16,0	2,5	14,5-15,3	6,6			5,0				8211159	1
RP 16		13	11	13	11	19,0	16,0	2,5	15,5-16,3	6,6			5,0				8211035	1
RP 18						20,0	16,0	2,5	17,4-18,3	6,6			5,0				8211043	1
RP 19						21,0	16,0	2,5	18,4-19,3	6,6			5,0				8211191	1
RP 20		17	15	17	15	22,0	19,0	2,5	19,4-20,3	6,6			5,0				8211205	1
RP 22						23,0	19,0	2,5	21,4-22,3	6,6			5,0				8211019	1
RP 25		22	19	22	19	30,0	23,0	3,0	24,4-25,3	8,6			6,0				8211027	1
Obujmica / Clamping clip																		
	5,5	22	19	22	19												8213055	200
	12,5	22	19	22	19												8213127	200
Obujmica višestruka / Multiple Clamp																		
		8,5 + 17				20,0	12,4		10,5	12,0	12,0	16,0					9805966	200
		13 + 14				14,0	12,4		13,0	12,0	12,0	16,0					9805915	200
Obujmica sa razmakom / Distance Clamp																		
11/8						25,0	16,0	11,0	8,0	19,5	13,5	4,0	3,8	10,0	7,0	5,0	9805982	1000
11/10						25,0	16,0	11,0	10,0	19,5	17,0	5,0	5,0	10,0	7,0	5,0	9805974	1000
11,5/10						25,0	16,0	11,5	10,0	21,5	20,0	4,0	3,2	10,0	7,0	5,0	9805990	500

Tuljak za ojačanje

Stabilizing Ferrules

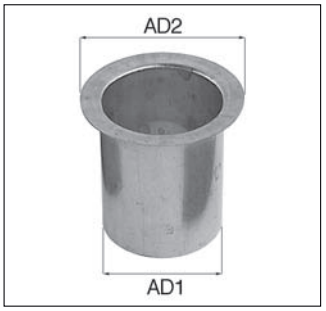

RoHS

Materijal:
mesing, boja metala

Svojstva:
• za ojačanje kraja zaštitne cijevi

Material:
bare brass

Characteristics:
• to stabilize protection conduit

tip Type	za unutarnji promjer cijevi (AD1) mm for tube internal diameter (AD1) mm	AD2 mm AD2 mm	broj artikla Art. no.	JP kom. PU pcs.
EH 7	7,0	10,0	6500072	1
EH 10	10,0	14,0	6500102	1
EH 11	11,0	14,0	6500110	1
EH 12	12,0	16,0	6500129	1
EH 13	13,0	16,0	6500137	1
EH 14	14,0	17,0	6500145	1
EH 15	15,0	18,5	6500153	1
EH 16	16,0	18,5	6500161	1
EH 17	17,0	22,0	6500170	1
EH 18	18,0	22,0	6500188	1
EH 19	19,0	-	6500196	1
EH 20	20,0	27,0	6500200	1
EH 21	21,0	27,0	6500218	1
EH 22	22,0	27,0	6500226	1
EH 23	23,0	27,0	6500234	1
EH 24	24,0	-	6500242	1
EH 25	25,0	-	6500250	1
EH 26	26,0	-	6500269	1
EH 27	27,0	-	6500277	1
EH 28	28,0	36,0	6500285	1
EH 29	29,0	36,0	6500293	1
EH 30	30,0	36,0	6500307	1
EH 31	31,0	-	6500315	1
EH 32	32,0	36,0	6500323	1
EH 33	33,0	-	6500331	1
EH 34	34,0	45,0	6500340	1
EH 35	35,0	-	6500358	1
EH 36	36,0	45,0	6500366	1
EH 37	37,0	-	6500374	1
EH 38	38,0	45,0	6500382	1
EH 39	39,0	-	6500390	1
EH 40	40,0	45,0	6500404	1
EH 41	41,0	-	6500412	1
EH 42	42,0	-	6500420	1
EH 43	43,0	-	6500439	1
EH 44	44,0	52,0	6500447	1
EH 45	45,0	-	6500455	1
EH 46	46,0	-	6500463	1
EH 47	47,0	-	6500471	1
EH 48	48,0	55,0	6500480	1
EH 49	49,0	-	6500490	1
EH 50	50,0	-	6500501	1

Čep za cijev

End cap

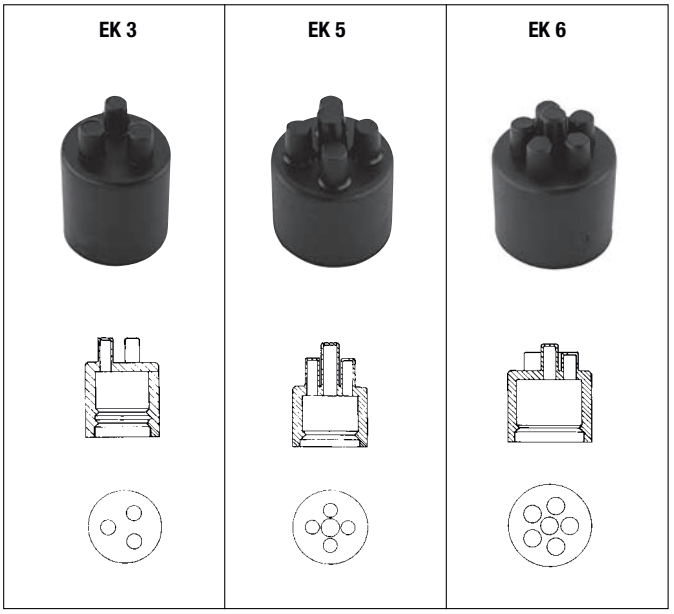

RoHS

Materijal:
polivinil klorid

Boje/izvedbe:
- crna

Svojstva:
- rezanjem se otvara potreban broj prolaza vodiča

Material:
Polyvinylchloride

Colour(s)/Designs:
- Black

Characteristics:
- each cable eye can be cut open when required

tip / Type	broj vodiča / cable eyes	odgovara za profil rebraste cijevi NW / suitable for corrugated tube NW: standardni + UFW / normal + UFW	AHW	samozatvarajući L-Profil / self closing L-Profile	zabravljujući V-Profil / lockable V-Profile	broj artikla / Art. no.	JP kom. / PU pcs.
EK 3	3	8,5		8,5L		8501033	1000
EK 5	5	10	8,5	10L	8,5V	8501068	1000
EK 6	6	13	11	13L	11V	8501076	1000

Gumeni završetak

End sleeve

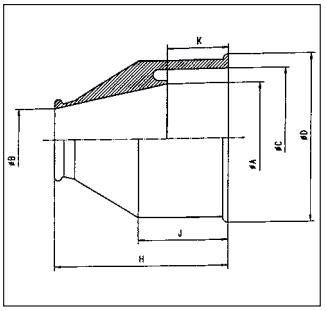

RoHS

Materijal:
TPE termoplastični elastomer

Radna temperatura:
-25°C do 80°C

Boje/izvedbe:
- crna

Svojstva:
- zaštita od izvlačenja

Material:
TPE Thermoplastic Elastomere

Temperature range:
-25°C to 80°C

Colour(s)/Designs:
- Black

Characteristics:
- With traction relief

2.5

tip / Type	Promjer za vodič Ø B mm / Clamping Range for cable Ø B mm	za rebraste cijevi Ø C mm / for corrugated tubes Ø C mm	odgovara za profil rebraste cijevi NW / suitable for corrugated tube NW: standardni + UFW / normal + UFW	AHW	samo-zatvarajući L-Profil / self closing L-Profile	zabravlju-jući V-Profil / lockable V-Profile	A mm	D mm	H mm	J mm	K mm	broj artikla / Art. no.	JP kom. / PU pcs.
GZ 9	4,0 - 9,0	17,0 - 19,0	14	-			10,5	22,4	33,0	19,0	11,5	8500096	3000
GZ 11	5,0 - 12,0	20,0 - 23,0	17	15	17L	15V	13,5	25,0	33,5	18,5	11,5	8500118	2400
GZ 13,5	6,0 - 14,0	22,0 - 25,0	19/22	-			16,0	27,0	32,3	16,0	11,6	8500134	2000
GZ 16	7,0 - 17,0	24,0 - 27,0	22	19		19V	18,0	29,0	47,0	25,0	16,7	8500169	1200
GZ 21	9,0 - 20,0	30,0 - 33,0	26	26		26V	23,0	35,0	47,5	26,0	15,5	8500215	800
GZ 29	16,0 - 30,0	39,0 - 43,0	37	-			31,0	45,0	47,0	25,0	17,0	8500290	900
GZ 36	23,0 - 40,0	49,0 - 54,0	50	-			42,0	55,0	47,0	24,0	17,0	8500363	500
GZ 42	30,0 - 45,0	55,0 - 61,0	-	-			48,0	62,2	47,0	25,0	17,0	8500428	500
GZ 48	33,0 - 50,0	61,0 - 66,0	-	-			54,0	67,0	47,0	25,0	17,0	8500487	100

Kabelske vezice EURO

EURO Cable ties

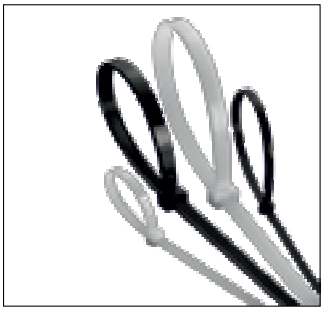

RoHS

Materijal:
poliamid 6.6

Radna temperatura:
-40°C do 60°C*
* certificirano prema novom EN 62275

Gorivost:
• UL 94: V2

Boje/izvedbe:
• crna
• prozirna
• crvena, plava, zelena, žuta = UL94-HB (na upit)

Svojstva:
• SKB: samozatvarajuća kabelska vezica
• otpornost na: ulje, benzin, slanu vodu, otapala, lužine
• UV-otporna (crna)

Material:
Polyamide 6.6

Temperature range:
-40°C to 60°C*
* certified according to new EN 62275

Inflammability:
• UL 94: V2

Colour(s)/Designs:
• Black
• Transparent
• Red, Blue, Green, Yellow = UL94-HB (on request)

Characteristics:
• SKB: Self Lock Tie
• Resistant against: Oils, petrols, saltwater, sulfids, alkalis
• UV-stabilized (black)

				malo pakiranje / Small unit				veliko pakiranje / Bulk unit			
tip Type	dimenzije mm Dimensions	za max. Ø for max. Ø	min. prekidna čvrstoća kg min. tensile strength kg	Broj artikla prozirne Art. no. transparent	Broj artikla crne Art. no. black	JP kom malo pakiranje PU pcs. small unit	UVE	Broj artikla transparent Art. no. transparent	Broj artikla schwarz Art. no. black	JP kom. veliko pakiranje PU pcs. Bulk unit	UVE
SKB 100 x 2,5	100 x 2,5	24,0	11,0	8330100	8330200	100	30.000	8330150	8330250	1.000	50.000
SKB 135 x 2,5	135 x 2,5	35,0	11,0	8330101	8330201	100	25.000	8330151	8330251	1.000	40.000
SKB 160 x 2,5	160 x 2,5	40,0	11,0	8330102	8330202	100	20.000	8330152	8330252	1.000	40.000
SKB 200 x 2,5	200 x 2,5	55,0	11,0	8330103	8330203	100	20.000	8330153	8330253	1.000	30.000
SKB 140 x 3,5	140 x 3,5	36,0	20,0	8330104	8330204	100	20.000	8330154	8330254	1.000	30.000
SKB 200 x 3,5	200 x 3,5	55,0	20,0	8330105	8330205	100	12.000	8330155	8330255	1.000	20.000
SKB 250 x 3,5	250 x 3,5	68,0	20,0	8330106	8330206	100	13.000				
SKB 280 x 3,5	280 x 3,5	80,0	20,0	8330107	8330207	100	13.000				
SKB 360 x 3,5	360 x 3,5	103,0	20,0	8330108	8330208	100	8.000				
SKB 140 x 4,5	140 x 4,5	33,0	28,0	8330109	8330209	100	10.000	8330156	8330256	1.000	20.000
SKB 160 x 4,5	160 x 4,5	38,0	28,0	8330110	8330210	100	10.000	8330157	8330257	1.000	20.000
SKB 180 x 4,5	180 x 4,5	45,0	28,0	8330111	8330211	100	10.000	8330158	8330258	1.000	15.000
SKB 200 x 4,5	200 x 4,5	51,0	28,0	8330112	8330212	100	10.000	8330159	8330259	1.000	10.000
SKB 250 x 4,5	250 x 4,5	68,0	28,0	8330113	8330213	100	10.000				
SKB 280 x 4,5	280 x 4,5	76,0	28,0	8330114	8330214	100	10.000				
SKB 300 x 4,5	300 x 4,5	82,0	28,0	8330115	8330215	100	8.000				
SKB 360 x 4,5	360 x 4,5	101,0	28,0	8330116	8330216	100	8.000				
SKB 430 x 4,5	430 x 4,5	123,0	28,0	8330117	8330217	100	5.000				
SKB 180 x 7,5	180 x 7,5	44,0	65,0	8330118	8330218	100	5.000				
SKB 200 x 7,5	200 x 7,5	48,0	65,0	8330119	8330219	100	5.000				
SKB 280 x 7,5	280 x 7,5	76,0	65,0	8330120	8330220	100	4.000				
SKB 360 x 7,5	360 x 7,5	101,0	65,0	8330121	8330221	100	3.000				
SKB 450 x 7,5	450 x 7,5	130,0	65,0	8330122	8330222	100	2.500				
SKB 540 x 7,5	540 x 7,5	160,0	65,0	8330123	8330223	100	2.500				
SKB 430 x 9,0	430 x 9,0	118,0	80,0	8330124	8330224	100	2.000				
SKB 550 x 9,0	550 x 9,0	160,0	80,0	8330125	8330225	100	1.500				
SKB 780 x 9,0	780 x 9,0	235,0	80,0	8330126	8330226	100	1.000				
SKB 920 x 9,0	920 x 9,0	280,0	80,0	8330127	8330227	100	1.000				
SKB 250 x 12,5	250 x 12,5	62,0	120,0	8330128	8330228	50	2.000				
SKB 500 x 12,5	500 x 12,5	140,0	120,0	8330129	8330229	50	1.000				
SKB 750 x 12,5	750 x 12,5	222,0	120,0	8330130	8330230	50	1.000				

Kabelske vezice UV-stabilne

UV-stabilised Cable ties

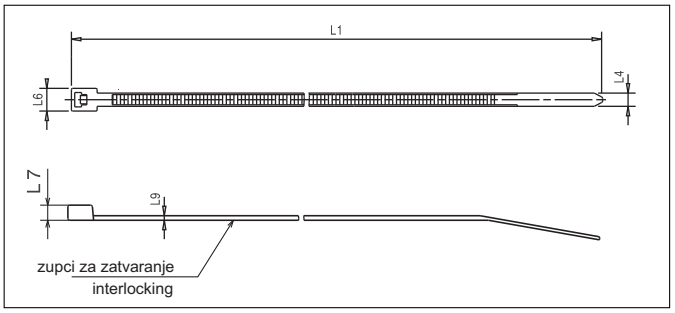

RoHS

Materijal
poliamid 66

Radna temperatura:
3000 h: -40°C do 105°C
240 h: -40°C do 120°C

Gorivost:
- UL 94: V2
- prema FMVSS 302: samogasiva

Boje/izvedbe:
- crna

Svojstva:
- UV-stabilne
- US-Mil. Standard M 20693 B
- Otpornost na: ulje, benzin slanu vodu, otapala, lužine

Material:
Polyamide 66

Temperature range:
3000 h: -40°C to 105°C
240 h: -40°C to 120°C

Inflammability:
- UL 94: V2
- acc. to FMVSS 302: selfextinguishing

Colour(s)/Designs:
- Black

Characteristics:
- UV-stabilised
- US-Mil standard M 20693 B
- Resistant against: Oils, petrols, saltwater, sulfids, alkalis

tip Type	L1 L1	L4 L4	L6 L6	L7 L7	L9 L9	za max. Ø for max. Ø	min. prekidna čvrstoća N min. min. Tensile Strength N min.	broj artikla crna Art. no. black	JP kom. PU pcs.
TSL-370-LHD-B	372 ± 2	7,6 ± 0,5	11,6 ± 0,5	7,17 ± 0,15	1,75 ± 0,3	106	>500	8320444	100
TSL-200-MB	200 ± 2	2,6 ± 0,3	4,6 ± 0,4	3,5 ± 0,2	1,2 ± 0,3	55	80	8320441	1000
TSL-370-SC-B	371 ± 2	4,5 ± 0,3	7,9 ± 0,4	5,9 ± 0,2	1,5 ± 0,3	106	>350	8320446	100
TSL-200-SB	203 ± 2	4,6 ± 0,3	7,9 ± 0,4	5,9 ± 0,2	1,35 ± 0,3	54	>350	8320443	1000
TSL-770-HD-YB	774 ± 4	8,8 ± 0,3	13,6 ± 0,5	8,8 ± 0,3	2,05 ± 0,3	230	>500	8320440	100
TSL-100-MB	102 ± 4	2,5 ± 0,3	4,5 ± 0,4	3,5 ± 0,2	1,0 ± 0,3	23	80	8320447	1000

Plastični brizgani dijelovi

Plastic Injection Molding

	Seite
Plastični brizgani dijelovi	130 - 131
Novi materijali	132
Nove proizvodne tehnike	132

	page
Plastic Injection Molding	130 - 131
New materials	132
New production techniques	132

Plastični brizgani dijelovi

Cjelovita rješenja u plastici s optimiziranim funkcijama

Na temelju vaših želja i specifikacija, naši će projektni inženjeri efikasno i isplativo razviti cjelovita rješenja u plastici s optimiziranim funkcijama za široku primjenu. Sveobuhvatna podrška, od početne ideje do proizvoda spremnog za ugradnju, jedna je od naših ključnih prednosti. Nudimo dosljedan koncept s jasno definiranim praćenjem rokova, od razvoja komponenti i prototipa do proizvodnje visoko učinkovitih kalupa u našem kućnom odjelu za izradu kalupa.

Naša tehnička oprema za proizvodnju je uzorna. Koristimo najnoviju generaciju strojeva za brizganje plastike za obradu svih termoplastičnih materijala do jedinične težine proizvoda od 500 g. Stoga su za projekte naših kupaca dostupni proizvodni strojevi s vrijednošću zatvaranja / zabravljivanja do 6.500 kN. Moderna računalna i prateća oprema osiguravaju «lean» proces u skladu s zahtjevima autoindustrije. Kao rezultat toga, u mogućnosti smo izvjestiti naše klijente o trenutnom stanju proizvodnje točno u sekundu, Naša politika kvalitete temelji se na uspješnoj certifikaciji prema DIN ISO-TS 16949. Stoga garantiramo ujednačenu razinu kvalitete.

Kontaktirajte nas i dozvolite nam da vas uvjerimo u naše visoke standarde izvedbe i stručnost u savjetovanju.
Vaši će upiti biti trenutno obrađeni.

Proizvodni program:

- program proizvoda za visoki napon
- dvo- i trokomponentni dijelovi
- inženjering lake gradnje
- nišni proizvodi kao što su zaštita od krađe, zaštita od elektromagnetskog zračenja, pregrade (u spremnicima), zaštita od sudara
- tehnički proizvodi
- sklopovi

Plastic Injection Molding

Complete solutions in plastics with optimized functions

Based on your wishes and specifications, our project engineers will develop complete solutions in plastics with optimized functions in a cost-efficient manner for a wide range of applications. Comprehensive support, from the initial idea through to the ready-to-install product, is one of our key strengths. We offer a consistent, deadline-monitored concept from component development and prototyping through to manufacturing of high-performance molds in our in-house mold making department.

Our technical production equipment is exemplary. We use latest-generation injection molding machines to process all standard thermoplastics up to a unit weight of 500 grams. Therefore, production machines up to a clamping/locking size of 6,500 kN are available for our customers' projects. Modern computer systems and supporting equipment ensure a lean process in line with automotive requirements. As a result, we are able to inform our customers about the current state of production with accuracy down to the second. Our quality policy is based on the successful certification according to DIN ISO-TS 16949. We thus guarantee consistent levels of quality.

Contact us and let us convince you of our high performance standards and expert consultancy. Your inquiries will be handled immediately.

Product portfolio:

- High voltage range
- 2-/3-component parts
- Light weight engineering
- Niche products such as theft protection, EMC protection, baffles (in-tank), crash protection
- Technical products
- Assemblies

Plastični brizgani dijelovi

Novi materijali

- ekološki materijali
- biorazgradivi
- EMC kompatibilna zaštita
- posebne smjese za visokonaponske primjene
- višeslojni materijali (karbonska vlakna / stakloplastika)
- reciklirajući materijali
- plastika visoke čvrstoće (zamjena za metal)

Nove proizvodne tehnike

Molimo vas da nas kontaktirate.

Plastic Injection Molding

New materials

- Green materials
- Biodegradable
- EMC compatibility protection
- Special compounds for high voltage applications
- Multilayer material (carbon fiber/fiberglass)
- Recycling
- Highly strength plastic (substitution of metal)

New production techniques

Please contact us.

E-Mobility
Multi-voltage wiring systems
Hybrid 600V - 48V - 12V Voltage transformers
Weight reduction **Battery venting**
Crash protection Blockloading
EMC high-temperature protection
Worldwide **Injection molding**
Innovation & solutions partner Extrusion

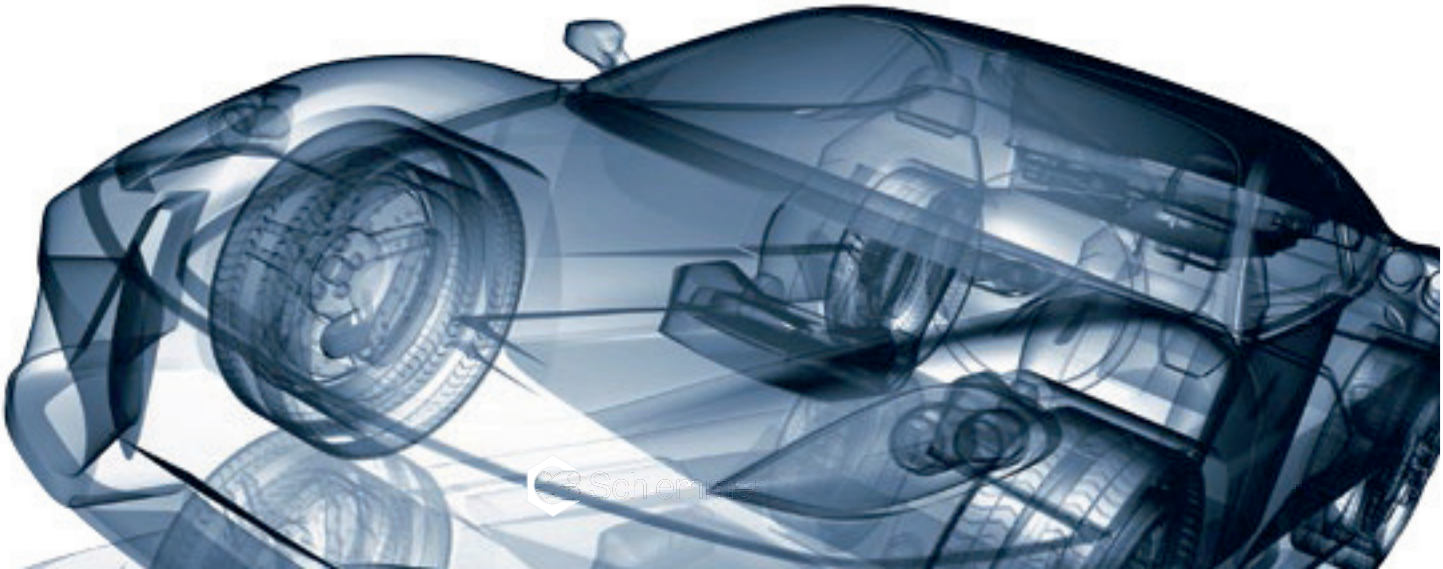

Kabelske uvodnice	Cable glands	3.1
EMV-kabelske uvodnice	EMC-Cable glands	3.2
Pribor	Accessories	3.3
ATEX Kabelske uvodnice Pribor	ATEX Cable glands Accessories	3.4

3.1

Kabelske uvodnice

Cable glands

	stranica		page
Pregled		**Overviews**	
Opis kabelskih uvodnica s metričkim navojem EN 50 262	4	Definition of cable glands with metric thread EN 50 262	4
Zatezni moment za kabelske uvodnice	5	Tightening torque for cable glands	5
Kutne dimenzije za kabelske uvodnice i pribor	5	Corner dimensions for cable glands and Accessories	5
Izdržljivost na vlačna i okretna opterećenja	5	Tensile load for retaining power and strain relief, torque for turning tests	5
Vrijednosti za test udara	5	Value for impact test	5
Uvodnica kabelska SCHLEMMER-TEC		**Cable gland SCHLEMMER-TEC**	
plastika PA	6 - 9	Plastic PA	6 - 9
pribor od plastike	10	Accessories Plastic	10
mesing niklani	11 - 15	Nickel-plated brass	11 - 15
nehrđajući čelik	16	Stainless steel	16
Uvodnica kabelska WADI-TEC		**Cable gland WADI-TEC**	
pregled	17	Overview	17
plastika PA	18 - 26	Plastic PA	18 - 26
PVDF	27	PVDF	27
mesing niklani	28 - 35	Nickel-plated brass	28 - 35
nehrđajući čelik	36	Stainless steel	36
Uvodnica kabelska XXL	37	Cable gland XXL	37
Uvodnica kabelska MAXXL NOVO	37	Cable gland MAXXL NEW	37
Uvodnica kabelska WADI-A	38 - 40	Cable gland WADI-A	38 - 40
Uvodnica kabelska tip ZEV	41	Cable gland Type ZEV	41
Uvodnica kabelska tip ZEVB	42	Cable gland Type ZEVB	42
Uvodnica kabelska tip ZA	43	Cable gland Type ZA	43
Uvodnica kabelska tip SR	44 - 45	Cable gland Type SR	44 - 45
Uvodnica kabelska tip Syntec/KS	46	Cable gland Type Syntec/KS	46
Uvodnica kabelska konusna	47 - 48	Conus cable gland	47 - 48
Kabelske uvodnice	49 - 50	Cable glands	49 - 50
Alat za montažu Mon.Za	51	Mounting tool Mon.Za	51

3.1

Kabelske uvodnice s metričkim navojem prema EN 50 262

Desetgodišnji prijelazni period za postojeće standarde PG navoja, DIN 46320 (dio 1 do 4) i DIN 40430, istekao je 1999. godine.

CENELEC - Europski odbor za elektrotehničke standarde, pripremio je novi standard za metričke kabelske uvodnice.

Kada ovaj europski standard EN 50256 - **"Metričke kabelske uvodnice za električne instalacije"** bude na snazi, bit će uveden ISO "fini" metrički navoj za kabelske uvodnice.

Najvažnije modifikacije za kabelske uvodnice:
ISO fini metrički navoj prema **EN 60423 - Tabela 1** standardiziran je umjesto do sada korištenog PG navoja.

Cable glands with metric thread acc. to EN 50262

The ten year transition period for the existing standards for PG threads, DIN 46320 part 1 to 4 and DIN 40430, ran out in 1999.

The **CENELEC** European committee for electrotechnical standards has prepared a new standard for metric cable glands.

When this European standard EN 50262 **„Metric cable glands for electrical installations“** will be in force, the metric thread ISO „fine“ will be introduced for cable glands.

Most important modification to cable glands:
Metric fine threads to **EN 60423 Table 1** have been standardized in place of the PG connecting thread formerly used.

Nominalna veličina **Nominal size**	12	16	20	25	32	40	50	63	75
Veličina navoja **Thread size**	M 12	M 16	M 20	M 25	M 32	M 40	M 50	M 63	M 75
Korak **Pitch**	1,5	1,5	1,5	1,5	1,5	1,5	1,5	1,5	1,5
Vanjski promjer u mm **External dia. in mm**	12	16	20	25	32	40	50	63	75
prostor za otvor prema Schlemmer specifikaciji **Schlemmer Specification Clearance hole**	12,2	16,2	20,2	25,2	32,2	40,2	50,2	63,2	75,2

Napomena:
Prilikom planiranja novih konstrukcija uređaja, kućišta, strojeva ili opreme za metričke kabelske uvodnice propisano je korištenje EN 50 262.

Schlemmer vam predstavlja . . .
kompletnu paletu kabelskih uvodnica, koje su tehnički oblikovane prema normi **EN 50 262**. Za postojeće uređaje navoji PG 7 do PG 48 još uvijek su raspoloživi.

Note:
When planing new constructions of devices, casing, machinery or equipment the EN 50262 for metric cable glands is prescribed.

Schlemmer presents you . . .
a complete range of cable glands, which has been technical designed to the **EN 50262.** For the existing devices the threads PG 7 - PG 48 are still available.

O standardu EN 50262...

Standard EN 50262 je zamijenio postojeće dobro poznate standarde za kabelske uvodnice s PG navojem, DIN 46320 1. do 4. dio i DIN 40430.

Stupanjem standarda „Metričke kabelske uvodnice za električne instalacije“ na snagu, metrički navoj ISO je uveden za kabelske uvodnice.

Najvažnija modifikacija kabelskih uvodnica je da metrički navoji prema EN 50262 postaju standardni kao zamjena za prijašnje PG navoje.

What does standard EN 50262 mean?

The standard EN 50262 was issued on 01.04.1998 and published in April 1999 in Germany as DIN EN 50262/VDE 0619.
The well-known standards for cable glands, such as DIN VDE 0619 (VDE 0619):1987-09, DIN 46 319:1989-12, DIN 46 320-1:1985-09 and DIN 46 320-2...-4:1973-01 were etc., are only applicable until 31.12.1999. Approved technical drawings using these standards were valid until 01.03.2001.

1.) Fields of application for standard EN 50262:

This European standard contains the requirements and tests for the construction and design of metric cable glands. This standard covers the cable gland as a complete part, but not the parts of cable glands.

2.) The screw-in thread of cable glands must be constructed according to chart 1 of EN 60423. The dimensions of the thread are M6x0,75; M8x1; M10x1; M12x1.5; M16x1.5; M20x1.5; M25x1.5; M32x1.5; M40x1.5; M50x1.5; M63x1.5 and M75x1.5.

3.) The mounting holes must be dimensioned according to Chart 1.

4.) Cable glands must be able to guarantee the retaining power for cables and conduits for the complete sealing section. Cable glands with strain relief for cables and conduits must free the conduits from the load of tension and twist. The tests are carried out, with in each case the smallest and largest mentioned value of the sealing resp. strain relief section of the according loads and torque values in Chart 2.

These tests are performed with test pins reproducing the outer diameters of the cables and conduits. The test pins consist of a metal rod with an elastomere sheath.

5.) Cable glands must be impact resistant.

A test pin according to the smallest value of the sealing section is fastened to the test probe and then the test is carried out a lowest temperature according to the energy in accordance with category of Chart 3.

All specifications, charts and values are excerpts from standard DIN 50262. Obviously further tests (electric properties, IP-Code etc.), which are necessary to classify and mark cable glands are described in this standard. It would although go beyond the scope of this catalogue.

Please feel free to ask for further information!

Zatezni moment za kabelske uvodnice

Tightening torque for cable glands

glava u Nm
Dome nut Nm

nominalna veličina PG **Nominal size PG**	**7**	**9**	**11**	**13**	**16**	**21**	**29**	**36**	**42**	**48**
mesing niklani nickel-plated brass	3	5	7	8	11	18	31	53	53	53
plastika Plastic	1,5	2,5	3,5	4	5,5	9	16	27	27	27
SCHLEMMER-TEC PA 6	1	1,5	2,6	2,6	2,6	4	4,5	14	14	14

nominalna veličina metrički **Nominal size Metric**	**12**	**16**	**20**	**25**	**32**	**40**	**50**	**63**	**75**
mesing niklani nickel-plated brass	3	5	8	12	20	34	53	53	53
plastika Plastic	1,5	2,5	4	6	10	17	27	27	
SCHLEMMER-TEC PA 6	1	1,5	2,6	4	4,5	14	14	14	

uvodnica u Nm
Connecting thread Nm

nominalna veličina PG **Nominal size PG**	**7**	**9**	**11**	**13**	**16**	**21**	**29**	**36**	**42**	**48**
mesing niklani nickel-plated brass	4	6	9	10	13	22	40	60	60	60
plastika Plastic	2	3	4,5	5	6,5	11	20	33	33	33

nominalna veličina metrički **Nominal size Metric**	**12**	**16**	**20**	**25**	**32**	**40**	**50**	**63**	**75**
mesing niklani nickel-plated brass	4	6	10	14	24	40	60	60	60
plastika Plastic	2	3	5	7	12	20	33	33	33

Kutne dimenzije za kabelske uvodnice i pribor

Corner dimensions for cable glands and Accessories

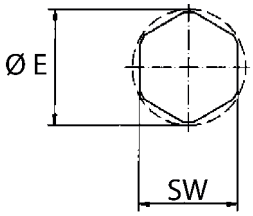

Promjer E označava prostor potreban za montažu dotičnog šesterokuta. Ovaj promjer odgovara razmaku između kuteva šesterokuta.
Kutna dimenzija šesterokuta: E = 1,155 x SW (razmak između stranica šesterokuta).

The diameter E indicates the assembly space required for the relevant hexagon. This diameter corresponds to the width across corner of the hexagon.
Corner of the hexagon: E = 1,155 x SW (across flats).

Izdržljivost na vlačna i okretna opterećenja

Tensile load for retaining power and strain relief, torque for turning tests

promjer kabela i vodiča **Cable and Conduit diameter** **(mm)**	**sila zadržavanja** **Retaining Power** **(N)**	**sila izvlačenja, izdržljivost na vlak A** **Strain relief Type A** **(N)**	**sila izvlačenja, izdržljivost na vlak B** **Strain relief Type B** **(N)**	**Izdržljivost na okret tip A i B** **Torque Type A and B** **(Nm)**
do 4	5	-	-	-
> 4 do 8	10	30	75	0,10
> 8 do 11	15	42	120	0,15
> 11 do 16	20	55	130	0,35
> 16 do 23	25	70	140	0,60
> 23 do 31	30	80	250	0,80
> 31 do 43	45	90	350	0,90
> 43 do 55	55	100	400	1,00
> 55	70	115	450	1,20

Vrijednosti za test udara

Value for impact test

kategorija	**Categorie**	1	2	3	4	5	6	7	8
opterećenje [N]	**Load [N]**	2	2	2	2	10	10	10	20
težina [kg]	**Weight [kg]**	0,2	0,2	0,2	0,2	1,0	1,0	1,0	2,0
energija [J]	**Energy [J]**	0,2	0,5	1,0	2,0	4,0	7,0	10,0	20,0
visina [m]	**Height [m]**	0,1	0,25	0,5	1,0	0,4	0,7	1,0	1,0

Uvodnica kabelska SCHLEMMER-TEC
Poliamid
PG-navoj, kratki

Cable gland SCHLEMMER-TEC
Polyamide
PG-thread, short

RoHS

IP 68
5 bar

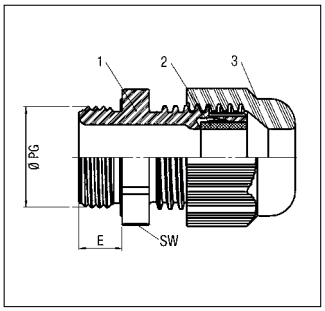

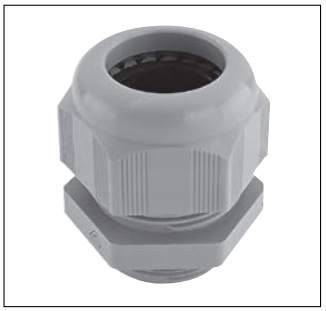

Materijal:
- 1/3: tijelo kabelske uvodnice/ glava: poliamid 6
- 2: brtva: neopren

Radna temperatura:
-40°C do 100°C

Boje/izvedbe:
- svjetlosiva, srebrnosiva, crna
- vanjski navoj: PG
- kratki navoj
- raspoloživa sa redukcijskom brtvom

Svojstva:
- maksimalna zaštita od izvlačenja kabela
- čvrsto brtvljenje osigurano pomoću brtvenog prstena
- trapezoidni navoj sa visokim okretnim momentom garantira čvrsti spoj glave i tijela uvodnice
- otpornost na vibracije
- nepropusnost za vodu i plinove

Pribor (vidi poglavlje…):
- Brtve sa više otvora (3.1)
- Matice (3.3)
- Montažni alat Mon.Za (3.1)

Upotreba:
- strojevi i uređaji
- fotonaponski sustavi
- tehnologija automatizacije
- brodogradnja

Material:
- 1/3: Gland element/Cap nut: Polyamide 6
- 2: Sealing: Neoprene

Temperature range:
-40°C to 100°C

Colour(s)/Designs:
- light grey, silver grey, jet black
- External thread: PG
- short thread
- reduction sealing insert

Characteristics:
- maximum strain relief through clamp lamella
- seal-tight to enclosure rack through sealing ring
- trapezoidal thread with high torque guarantees tight and permanent fit of the cap nut
- vibration-proof
- gas and water-tight

Accessories (see chapter…):
- Multi-holed Sealings (3.1)
- lock nuts (3.3)
- Mounting tool Mon.Za (3.1)

Applications:
- Machine and apparatus construction
- Photovoltaic
- Automation technology
- Ship yards

vanjski navoj External thread	za kabel promjera mm Clamping range mm	duljina navoja (E) mm Thread length (E) mm	SW mm SW mm	broj artikla svjetlosiva RAL 7035 Art. no. light grey RAL 7035	broj artikla srebrnosiva RAL 7001 Art. no. silver grey RAL 7001	broj artikla crna RAL 9005 Art. no. jet black RAL 9005	JP kom. PU pcs.
PG 7	2,5 - 6,5	8,0	15,0	5308707	5308070	5308507	50
PG 9	2,5 - 8,0	8,0	19,0	5308709	5308097	5308509	50
PG 11	3,5 - 10,0	8,0	22,0	5308711	5308119	5308511	50
PG 13,5	5,0 - 12,0	9,0	24,0	5308713	5308135	5308513	50
PG 16	7,0 - 14,0	10,0	27,0	5308716	5308160	5308516	50
PG 21	9,0 - 18,0	11,0	33,0	5308721	5308216	5308521	25
PG 29	14,0 - 25,0	11,0	42,0	5308729	5308291	5308529	20
PG 36	18,0 - 32,0	13,0	53,0	5308736	5308364	5308536	10
PG 42	24,0 - 38,5	13,0	60,0	5308737	5308365	5308537	5
PG 48	35,0 - 48,0	14,0	70,0	5308738	5308366	5308538	5
sa redukcijskom brtvom / with reduction sealing insert							
PG 7 RED	1,5 - 5,0	8,0	15,0	5309107	5309007	5309207	50
PG 9 RED	1,5 - 6,0	8,0	19,0	5309109	5309009	5309209	50
PG 11 RED	2,0 - 7,0	8,0	22,0	5309111	5309011	5309211	50
PG 13,5 RED	3,0 - 9,0	9,0	24,0	5309113	5309013	5309213	50
PG 16 RED	5,0 - 12,0	10,0	27,0	5309116	5309016	5309216	50
PG 21 RED	7,0 - 16,0	11,0	33,0	5309121	5309021	5309221	25
PG 29 RED	11,0 - 21,0	11,0	42,0	5309129	5309029	5309229	20
PG 36 RED	13,0 - 26,0	13,0	53,0	5309136	5309036	5309236	10
PG 42 RED	17,0 - 31,0	13,0	60,0	5309142	5309042	5309242	5
PG 48 RED	26,0 - 39,0	14,0	70,0	5309148	5309048	5309248	5

Uvodnica kabelska SCHLEMMER-TEC

Poliamid
metrički navoj, kratki

Cable gland SCHLEMMER-TEC

Polyamide
metric thread, short

RoHS | IP 68 5 bar | EN 50262

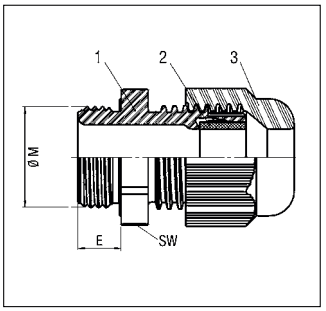

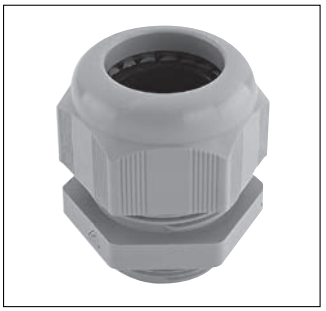

Materijal:
- 1/3: tijelo kabelske uvodnice/ glava: poliamid 6
- 2: brtva: neopren

Radna temperatura:
-40°C do 100°C

Boje/izvedbe:
- svjetlosiva, srebrnosiva, crna
- vanjski navoj: metrički
- kratki navoj
- raspoloživa sa redukcijskom brtvom

Svojstva:
- maksimalna zaštita od izvlačenja kabela
- čvrsto brtvljenje osigurano pomoću brtvenog prstena
- trapezoidni navoj sa visokim okretnim momentom garantira čvrsti spoj glave i tijela uvodnice
- otpornost na vibracije
- nepropusnost za vodu i plinove

Pribor (vidi poglavlje…):
- Brtve sa više otvora (3.1)
- Matice (3.3)
- Montažni alat Mon.Za (3.1)

Upotreba:
- strojevi i uređaji
- fotonaponski sustavi
- tehnologija automatizacije
- brodogradnja

Material:
- 1/3: Gland element/Cap nut: Polyamide 6
- 2: Sealing: Neoprene

Temperature range:
-40°C to 100°C

Colour(s)/Designs:
- light grey, silver grey, jet black
- External thread: metric
- short thread
- reduction sealing insert

Characteristics:
- maximum strain relief through clamp lamella
- seal-tight to enclosure rack through sealing ring
- trapezoidal thread with high torque guarantees tight and permanent fit of the cap nut
- vibration-proof
- gas and water-tight

Accessories (see chapter…):
- Multi-holed Sealings (3.1)
- lock nuts (3.3)
- Mounting tool Mon.Za (3.1)

Applications:
- Machine and apparatus construction
- Photovoltaic
- Automation technology
- Ship yards

vanjski navoj External thread	za kabel promjera mm Clamping range mm	duljina navoja (E) mm Thread length (E) mm	SW mm SW mm	broj artikla svjetlosiva RAL 7035 Art. no. light grey RAL 7035	broj artikla srebrnosiva RAL 7001 Art. no. silver grey RAL 7001	broj artikla crna RAL 9005 Art. no. jet black RAL 9005	JP kom. PU pcs.
M 12 x 1,5	2,5 - 6,5	8,0	15,0	5308950	5308930	5308940	50
M 16 x 1,5/9	2,5 - 8,0	10,0	19,0	5308958	5308938	5308948	50
M 16 x 1,5/11	3,5 - 10,0	10,0	22,0	5308951	5308931	5308941	50
M 20 x 1,5/13	5,0 - 12,0	10,0	24,0	5308959	5308939	5308949	50
M 20 x 1,5/16	7,0 - 14,0	10,0	27,0	5308952	5308932	5308942	50
M 25 x 1,5/16	7,0 - 14,0	10,0	27,0	5308960	5308961	5308962	50
M 25 x 1,5/21	9,0 - 18,0	10,0	33,0	5308953	5308933	5308943	25
M 32 x 1,5	14,0 - 25,0	10,0	42,0	5308954	5308934	5308944	20
M 40 x 1,5	18,0 - 32,0	10,0	53,0	5308955	5308935	5308945	10
M 50 x 1,5	24,0 - 38,5	12,0	60,0	5308956	5308936	5308946	5
M 63 x 1,5	35,0 - 48,0	12,0	70,0	5308957	5308937	5308947	5
sa redukcijskom brtvom / with reduction sealing insert							
M 12 x 1,5 RED	1,5 - 5,0	8,0	15,0	5309612	5309512	5309712	50
M 16 x 1,5/9 RED	1,5 - 6,0	10,0	19,0	5309615	5309515	5309715	50
M 16 x 1,5/11 RED	2,0 - 7,0	10,0	22,0	5309616	5309516	5309716	50
M 20 x 1,5/13 RED	3,0 - 9,0	10,0	24,0	5309619	5309519	5309719	50
M 20 x 1,5/16 RED	5,0 - 12,0	10,0	27,0	5309620	5309520	5309720	50
M 25 x 1,5/16 RED	5,0 - 12,0	10,0	27,0	5309624	5309524	5309724	50
M 25 x 1,5/21 RED	7,0 - 16,0	10,0	33,0	5309625	5309525	5309725	25
M 32 x 1,5 RED	11,0 - 21,0	10,0	42,0	5309632	5309532	5309732	20
M 40 x 1,5 RED	13,0 - 26,0	10,0	53,0	5309640	5309540	5309740	10
M 50 x 1,5 RED	17,0 - 31,0	12,0	60,0	5309650	5309550	5309750	5
M 63 x 1,5 RED	26,0 - 39,0	12,0	70,0	5309663	5309563	5309763	5

Uvodnica kabelska SCHLEMMER-TEC

Poliamid
metrički navoj, dugi

Cable gland SCHLEMMER-TEC

Polyamide
metric thread, long

RoHS | IP 68 5 bar | EN 50262

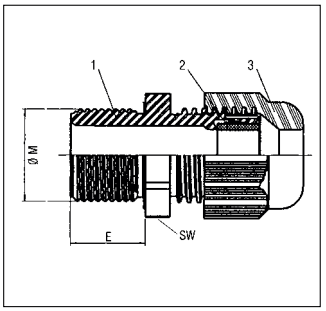

Materijal:
- 1/3: tijelo kabelske uvodnice/ glava: poliamid 6
- 2: brtva: neopren

Radna temperatura:
-40°C do 100°C

Boje/izvedbe:
- svjetlosiva, srebrnosiva, crna
- vanjski navoj: metrički
- dugi navoj
- raspoloživa sa redukcijskom brtvom

Svojstva:
- maksimalna zaštita od izvlačenja kabela
- čvrsto brtvljenje osigurano pomoću brtvenog prstena
- trapezoidni navoj sa visokim okretnim momentom garantira čvrsti spoj glave i tijela uvodnice
- otpornost na vibracije
- nepropusnost za vodu i plinove

Pribor (vidi poglavlje…):
- Brtve sa više otvora (3.1)
- Matice (3.3)
- Montažni alat Mon.Za (3.1)

Upotreba:
- strojevi i uređaji
- fotonaponski sustavi
- tehnologija automatizacije
- brodogradnja

Material:
- 1/3: Gland element/Cap nut: Polyamide 6
- 2: Sealing: Neoprene

Temperature range:
-40°C to 100°C

Colour(s)/Designs:
- light grey, silver grey, jet black
- External thread: metric
- long thread
- reduction sealing insert

Characteristics:
- maximum strain relief through clamp lamella
- seal-tight to enclosure rack through sealing ring
- trapezoidal thread with high torque guarantees tight and permanent fit of the cap nut
- vibration-proof
- gas and water-tight

Accessories (see chapter…):
- Multi-holed Sealings (3.1)
- lock nuts (3.3)
- Mounting tool Mon.Za (3.1)

Applications:
- Machine and apparatus construction
- Photovoltaic
- Automation technology
- Ship yards

vanjski navoj External thread	za kabel promjera mm Clamping range mm	duljina navoja (E) mm Thread length (E) mm	SW mm SW mm	broj artikla svjetlosiva RAL 7035 Art. no. light grey RAL 7035	broj artikla srebrnosiva RAL 7001 Art. no silvergrey RAL 7001	broj artikla crna RAL 9005 Art. no. jet black RAL 9005	JP kom. PU pcs.
M 12 x 1,5	2,5 - 6,5	15,0	15,0	5307212	5307012	5307112	50
M 16 x 1,5/9	2,5 - 8,0	15,0	19,0	5307217	5307017	5307117	50
M 16 x 1,5/11	3,5 - 10,0	15,0	22,0	5307216	5307016	5307116	50
M 20 x 1,5/13	5,0 - 12,0	15,0	24,0	5307221	5307021	5307121	50
M 20 x 1,5/16	7,0 - 14,0	15,0	27,0	5307220	5307020	5307120	50
M 25 x 1,5/16	7,0 - 14,0	15,0	27,0	5307226	5307026	5307126	50
M 25 x 1,5/21	9,0 - 18,0	15,0	33,0	5307225	5307025	5307125	25
M 32 x 1,5	14,0 - 25,0	15,0	42,0	5307232	5307032	5307132	20
M 40 x 1,5	18,0 - 32,0	16,0	53,0	5307240	5307040	5307140	10
M 50 x 1,5	24,0 - 38,5	16,0	60,0	5307250	5307050	5307150	5
M 63 x 1,5	35,0 - 48,0	16,0	70,0	5307263	5307063	5307163	5
sa redukcijskom brtvom / with reduction sealing insert							
M 12 x 1,5 RED	1,5 - 5,0	15,0	15,0	5307712	5307512	5307612	50
M 16 x 1,5/9 RED	1,5 - 6,0	15,0	19,0	5307717	5307517	5307617	50
M 16 x 1,5/11 RED	2,0 - 7,0	15,0	22,0	5307716	5307516	5307616	50
M 20 x 1,5/13 RED	3,0 - 9,0	15,0	24,0	5307721	5307521	5307621	50
M 20 x 1,5/16 RED	5,0 - 12,0	15,0	27,0	5307720	5307520	5307620	50
M 25 x 1,5/16 RED	5,0 - 12,0	15,0	27,0	5307726	5307526	5307626	50
M 25 x 1,5/21 RED	7,0 - 16,0	15,0	33,0	5307725	5307525	5307625	25
M 32 x 1,5 RED	11,0 - 21,0	15,0	42,0	5307732	5307532	5307632	20
M 40 x 1,5 RED	13,0 - 26,0	16,0	53,0	5307740	5307540	5307640	10
M 50 x 1,5 RED	17,0 - 31,0	16,0	60,0	5307750	5307550	5307650	5
M 63 x 1,5 RED	26,0 - 39,0	16,0	70,0	5307763	5307563	5307663	5

Uvodnica kabelska SCHLEMMER-TEC
Poliamid
NPT-navoj

Cable gland SCHLEMMER-TEC
Polyamide
NPT-thread

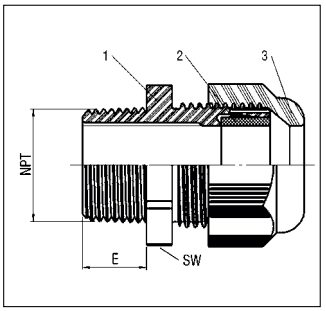

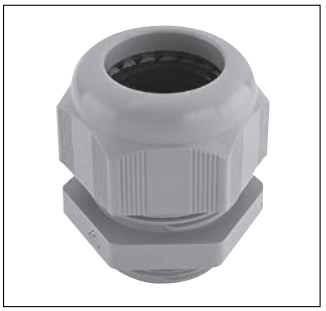

RoHS | IP 68 5 bar

Materijal:
- 1/3: tijelo kabelske uvodnice/ glava: poliamid 6
- 2: brtva: neopren

Radna temperatura:
-40°C do 100°C

Boje/izvedbe:
- svjetlosiva, srebrnosiva, crna
- vanjski navoj: NPT
- raspoloživa sa redukcijskom brtvom

Svojstva:
- maksimalna zaštita od izvlačenja kabela
- čvrsto brtvljenje osigurano pomoću brtvenog prstena
- trapezoidni navoj sa visokim okretnim momentom garantira čvrsti spoj glave i tijela uvodnice
- otpornost na vibracije
- nepropusnost za vodu i plinove

Pribor (vidi poglavlje…):
- Brtve sa više otvora (3.1)
- Matice (3.3)
- Montažni alat Mon.Za (3.1)

Upotreba:
- strojevi i uređaji
- fotonaponski sustavi
- tehnologija automatizacije
- brodogradnja
- Offshore uređaji

Material:
- 1/3: Gland element/Cap nut: Polyamide 6
- 2: Sealing: Neoprene

Temperature range:
-40°C to 100°C

Colour(s)/Designs:
- light grey, silver grey, jet black
- External thread: NPT
- reduction sealing insert

Characteristics:
- maximum strain relief through clamp lamella
- seal-tight to enclosure rack through sealing ring
- trapezoidal thread with high torque guarantees tight and permanent fit of the cap nut
- vibration-proof
- gas and water-tight

Accessories (see chapter…):
- Multi-holed sealing (3.1)
- lock nuts (3.3)
- Mounting tool Mon.Za (3.1)

Applications:
- Machine and apparatus construction
- Photovoltaic
- Automation technology
- Ship yards
- Off-shore apparatus

3.1

vanjski navoj External thread	za kabel promjera mm Clamping range mm	duljina navoja (E) mm Thread length (E) mm	SW mm SW mm	broj artikla svjetlosiva RAL 7035 Art. no. light grey RAL 7035	broj artikla srebrnosiva RAL 7001 Art. no. silver grey RAL 7001	broj artikla crna RAL 9005 Art. no. jet black RAL 9005	JP kom. PU pcs.
NPT 3/8"	2,5 - 8,0	11,0	19,0	5308900	5308910	5308920	50
NPT 1/2"	5,0 - 12,0	14,0	24,0	5308901	5308911	5308921	50
NPT 3/4"	9,0 - 18,0	15,0	33,0	5308902	5308912	5308922	20
NPT 1"	14,0 - 25,0	18,0	42,0	5308903	5308913	5308923	20
sa redukcijskom brtvom / with reduction sealing insert							
NPT 3/8" RED	1,5 - 6,0	11,0	19,0	5308904	5308914	5308924	50
NPT 1/2" RED	3,0 - 9,0	14,0	24,0	5308905	5308915	5308925	50
NPT 3/4" RED	7,0 - 16,0	15,0	33,0	5308906	5308916	5308926	20
NPT 1" RED	11,0 - 21,0	18,0	42,0	5308907	5308917	5308927	20

Pribor SCHLEMMER-TEC
Poliamid

Brtva s ravnom glavom

Accessories SCHLEMMER-TEC
Polyamide

Flat head sealing

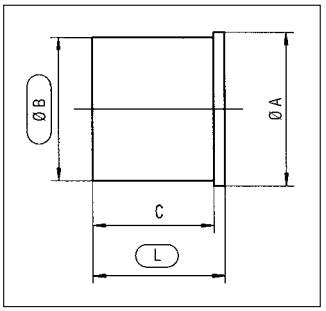

RoHS | IP 68

Materijal:
EPDM

Boje/izvedbe:
- crna

Radna temperatura:
-40°C do 130°C

Upotreba:
- **odgovara samo za sve Poliamid SCHLEMMER-TEC kabelske uvodnice**
- kao čep za zatvaranje/brtvljenje otvorenih kabelskih uvodnica

Material:
EPDM

Colour(s)/Designs:
- black

Temperature range:
-40°C to 130°C

Applications:
- **only fits for all Polyamide SCHLEMMER-TEC cable glands**
- as a plug sealing clamp for closing/ sealing open cable glands

odgovara za suitable for	Ø A mm Ø A mm	Ø B mm Ø B mm	C mm C mm	L mm L mm	broj artikla Art. no.	JP kom. PU pcs.
PG 9; PG 11; M 16	11,0	8,0	17,0	20,0	7217701	1000
PG 13,5; PG 16; M 20	15,0	12,0	18,0	21,0	7217702	1000
PG 21; M 25	18,0	15,0	19,0	22,0	7217703	1000

Brtva i čep otvora brtve

Sealing and Blind pin

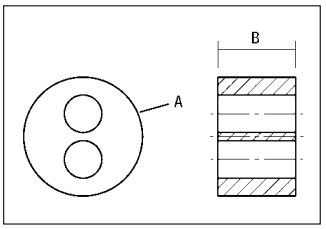

RoHS

Materijal:
neopren

Radna temperatura:
-25°C do 100°C

Boje/izvedbe:
- crna

Svojstva:
- isporučuje se posebno
- ∗) s otvorima od jednog drugog kraja brtve

Upotreba:
- **odgovara samo za sve Poliamid SCHLEMMER-TEC kabelske uvodnice**

Material:
Neoprene

Temperature range:
-25°C to 100°C

Colour(s)/Designs:
- black

Characteristics:
- delivered only seperately
- ∗) with end-to-end pierced holes

Applications:
- **only fits for all Polyamide SCHLEMMER-TEC cable glands**

odgovara za suitable for	broj otvora cable-passages	promjer otvora mm Hole diameter mm	A mm A mm	B mm B mm	broj artikla čep otvora brtve Art. no. Blind pin	broj artikla brtva Art. no. Sealing	JP kom. PU pcs.
Brtva s otvorima za kabele / Multi-holed Sealing ∗)							
M 16/PG 11	2 x	4,0	13,0	8,0	4650494	8114200	slobodno / loose
M 20/PG 16	2 x	5,0	17,0	10,0	4650495	8114203	slobodno / loose
M 20/PG 16	2 x	6,0	17,0	10,0	4650496	8114201	slobodno / loose
M 20/PG 16	3 x	6,0	17,0	10,0	4650496	8114215	slobodno / loose
M 20/PG 16	4 x	5,0	17,0	10,0	4650495	8114202	slobodno / loose
M 25/PG 21	2 x	6,0	22,5	11,5	4650496	8114204	slobodno / loose
M 25/PG 21	2 x	8,0	22,5	11,5	4650498	8114208	slobodno / loose
M 25/PG 21	3 x	7,0	22,5	11,5	4650497	8114205	slobodno / loose
M 25/PG 21	4 x	6,5	22,5	11,5	-	8114206	slobodno / loose
M 25/PG 21	6 x	4,0	22,5	11,5	4650494	8114207	slobodno / loose
M 32/PG 29	4 x	6,0	30,5	13,0	4650496	8114212	slobodno / loose
M 32/PG 29	4 x	8,0	30,5	13,0	4650498	8114209	slobodno / loose
M 32/PG 29	6 x	6,0	30,5	13,0	4650496	8114210	slobodno / loose
M 32/PG 29	8 x	4,0	30,5	13,0	4650494	8114211	slobodno / loose
Slijepa brtva bez otvora za kabele / Full-Sealing without cable-passages							
M 16/PG 11	-	-	13,0	8,0		8114250	slobodno / loose
M 20/PG 16	-	-	17,0	10,0		8114251	slobodno / loose
M 25/PG 21	-	-	22,5	11,5		8114252	slobodno / loose
M 32/PG 29	-	-	30,5	13,0		8114253	slobodno / loose

Uvodnica kabelska SCHLEMMER-TEC

mesing niklani
PG-navoj, kratki

Cable gland SCHLEMMER-TEC

nickel-plated brass
PG-thread, short

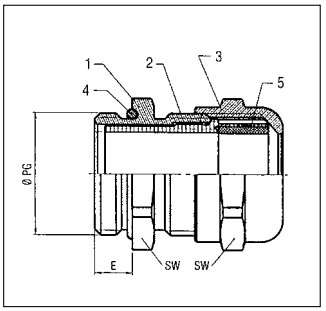

RoHS | IP 68

Materijal:
- 1/3: tijelo kabelske uvodnice/ glava: mesing niklani
- 2: stezni prsten: poliamid 6
- 4: brtveni prsten za vanjski navoj: nitril
- 5: brtva: neopren

Radna temperatura:
-40°C do 100°C

Boje/izvedbe:
- vanjski navoj: PG
- kratki navoj
- raspoloživa sa redukcijskom brtvom

Svojstva:
- maksimalna zaštita od izvlačenja kabela
- nepropusnost za vodu i plinove
- dodatni brtveni prsten (4) od nitrila na tijelu kabelske uvodnice

Pribor (vidi poglavlje…):
- Matice (3.3)
- Montažni alat Mon.Za (3.1)

Upotreba:
- strojevi i uređaji
- fotonaponski sustavi
- tehnologija automatizacije

Material:
- 1/3: Gland element/Cap nut: nickel-plated brass
- 2: Clamping shell: Polyamide 6
- 4: Sealing-Ring for External thread: Nitrile
- 5: Sealing: Neoprene

Temperature range:
-40°C to 100°C

Colour(s)/Designs:
- External thread: PG
- short thread
- reduction sealing insert

Characteristics:
- maximum strain relief through clamp lamella
- gas and water-tight
- additional Nitrile sealing-ring (4) on the gland element

Accessories (see chapter…):
- lock nuts (3.3)
- Mounting tool Mon.Za (3.1)

Applications:
- Machine and apparatus construction
- Photovoltaic
- Automation technology

vanjski navoj External thread	za kabel promjera mm Clamping range mm	duljina navoja (E) mm Thread length (E) mm	SW mm SW mm	broj artikla niklani Art. no. nickel-plated	JP kom. PU pcs.
PG 7	2,5 - 6,5	5,0	14,0	4220307	50
PG 9	4,0 - 9,5	6,0	17,0	4220309	50
PG 11	6,0 - 11,5	6,0	20,0	4220311	50
PG 13,5	7,0 - 13,0	6,5	22,0	4220313	50
PG 16	8,0 - 15,0	6,5	24,0	4220316	50
PG 21	11,0 - 19,0	7,0	30,0	4220321	20
PG 29	16,0 - 26,0	8,0	40,0	4220329	20
PG 36	22,0 - 34,5	9,0	50,0	4220336	10
PG 42	27,0 - 40,0	10,0	58,0	4220342	5
PG 48	35,0 - 48,0	10,0	65,0	4220348	5
sa redukcijskom brtvom / with reduction sealing insert					
PG 7 RED	1,5 - 5,0	5,0	14,0	4220351	50
PG 9 RED	2,5 - 7,0	6,0	17,0	4220352	50
PG 11 RED	3,0 - 8,5	6,0	20,0	4220353	50
PG 13,5 RED	4,0 - 10,0	6,5	22,0	4220354	50
PG 16 RED	5,0 - 12,0	6,5	24,0	4220355	50
PG 21 RED	8,0 - 16,0	7,0	30,0	4220356	20
PG 29 RED	11,0 - 21,0	8,0	40,0	4220357	20
PG 36 RED	16,0 - 28,0	9,0	50,0	4220358	10
PG 42 RED	22,0 - 34,0	10,0	58,0	4220359	5
PG 48 RED	28,0 - 40,0	10,0	65,0	4220360	5

Uvodnica kabelska SCHLEMMER-TEC
mesing niklani
PG-navoj, dugi

Cable gland SCHLEMMER-TEC
nickel-plated brass
PG-thread, long

RoHS | IP 68

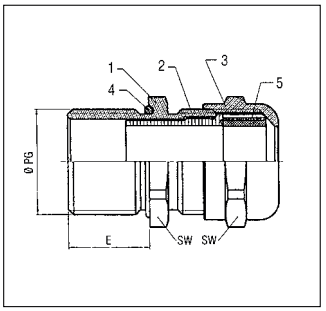

Materijal:
- 1/3: tijelo kabelske uvodnice/ glava: mesing niklani
- 2: stezni prsten: poliamid 6
- 4: brtveni prsten za vanjski navoj: nitril
- 5: brtva: neopren

Radna temperatura:
-40°C do 100°C

Boje/izvedbe:
- vanjski navoj: PG
- dugi navoj
- raspoloživa sa redukcijskom brtvom

Svojstva:
- maksimalna zaštita od izvlačenja kabela
- nepropusnost za vodu i plinove
- dodatni brtveni prsten (4) od nitrila na tijelu kabelske uvodnice

Pribor (vidi poglavlje…):
- Matice (3.3)
- Montažni alat Mon.Za (3.1)

Upotreba:
- strojevi i uređaji
- fotonaponski sustavi
- tehnologija automatizacije

Material:
- 1/3: Gland element/Cap nut: nickel-plated brass
- 2: Clamping shell: Polyamide 6
- 4: Sealing-Ring for External thread: Nitrile
- 5: Sealing: Neoprene

Temperature range:
-40°C to 100°C

Colour(s)/Designs:
- External thread: PG
- long thread
- reduction sealing insert

Characteristics:
- maximum strain relief through clamp lamella
- gas and water-tight
- additional Nitrile sealing-ring (4) on the gland element

Accessories (see chapter…):
- lock nuts (3.3)
- Mounting tool Mon.Za (3.1)

Applications:
- Machine and apparatus construction
- Photovoltaic
- Automation technology

vanjski navoj External thread	za kabel promjera mm Clamping range mm	duljina navoja (E) mm Thread length (E) mm	SW mm SW mm	broj artikla niklani Art. no. nickel-plated	JP kom. PU pcs.
PG 7	2,5 - 6,5	15,0	14,0	4220407	50
PG 9	4,0 - 9,5	15,0	17,0	4220409	50
PG 11	6,0 - 11,5	15,0	20,0	4220411	50
PG 13,5	7,0 - 13,0	15,0	22,0	4220413	50
PG 16	8,0 - 15,0	15,0	24,0	4220416	50
PG 21	11,0 - 19,0	15,0	30,0	4220421	20
PG 29	16,0 - 26,0	15,0	40,0	4220429	20
PG 36	22,0 - 34,5	15,0	50,0	4220436	10
PG 42	27,0 - 40,0	15,0	58,0	4220442	5
PG 48	35,0 - 48,0	15,0	65,0	4220448	5
sa redukcijskom brtvom / with reduction sealing insert					
PG 7 RED	1,5 - 5,0	15,0	14,0	4220451	50
PG 9 RED	2,5 - 7,0	15,0	17,0	4220452	50
PG 11 RED	3,0 - 8,5	15,0	20,0	4220453	50
PG 13,5 RED	4,0 - 10,0	15,0	22,0	4220454	50
PG 16 RED	5,0 - 12,0	15,0	24,0	4220455	50
PG 21 RED	8,0 - 16,0	15,0	30,0	4220456	20
PG 29 RED	11,0 - 21,0	15,0	40,0	4220457	20
PG 36 RED	16,0 - 28,0	15,0	50,0	4220458	10
PG 42 RED	22,0 - 34,0	15,0	58,0	4220459	5
PG 48 RED	28,0 - 40,0	15,0	65,0	4220460	5

Uvodnica kabelska SCHLEMMER-TEC

mesing niklani
metrički navoj, kratki

Cable gland SCHLEMMER-TEC

nickel-plated brass
metric thread, short

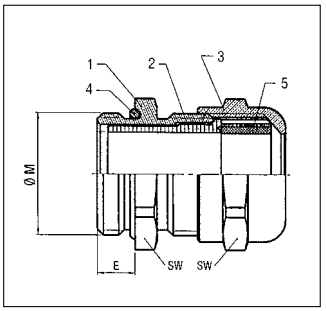

RoHS | IP 68 | EN 50262

Materijal:
- 1/3: tijelo kabelske uvodnice/ glava: mesing niklani
- 2: stezni prsten: poliamid 6
- 4: brtveni prsten za vanjski navoj: nitril
- 5: brtva: neopren

Radna temperatura:
-40°C do 100°C

Boje/izvedbe:
- vanjski navoj: metrički
- kratki navoj
- raspoloživa sa redukcijskom brtvom

Svojstva:
- maksimalna zaštita od izvlačenja kabela
- nepropusnost za vodu i plinove
- dodatni brtveni prsten (4) od nitrila na tijelu kabelske uvodnice

Pribor (vidi poglavlje…):
- Matice (3.3)
- Montažni alat Mon.Za (3.1)

Upotreba:
- strojevi i uređaji
- fotonaponski sustavi
- tehnologija automatizacije

Material:
- 1/3: Gland element/Cap nut: nickel-plated brass
- 2: Clamping shell: Polyamide 6
- 4: Sealing-Ring for External thread: Nitrile
- 5: Sealing: Neoprene

Temperature range:
-40°C to 100°C

Colour(s)/Designs:
- External thread: metric
- short thread
- reduction sealing insert

Characteristics:
- maximum strain relief through clamp lamella
- gas and water-tight
- additional Nitrile sealing-ring (4) on the gland element

Accessories (see chapter…):
- lock nuts (3.3)
- Mounting tool Mon.Za (3.1)

Applications:
- Machine and apparatus construction
- Photovoltaic
- Automation technology

vanjski navoj External thread	za kabel promjera mm Clamping range mm	duljina navoja (E) mm Thread length (E) mm	SW mm SW mm	broj artikla niklani Art. no. nickel-plated	JP kom. PU pcs.
M 12 x 1,5	2,5 - 6,5	5,0	14,0	4220612	50
M 16 x 1,5	4,0 - 9,5	5,0	17,0	4220616	50
M 20 x 1,5	7,0 - 13,0	6,0	22,0	4220620	50
M 25 x 1,5	8,0 - 16,0	7,0	27,0	4220625	25
M 32 x 1,5	11,0 - 21,0	8,0	34,0	4220632	20
M 40 x 1,5	15,0 - 27,0	8,0	42,0	4220640	10
M 50 x 1,5	22,0 - 35,0	9,0	55,0	4220650	5
M 63 x 1,5	35,0 - 48,0	10,0	65,0	4220663	5
sa redukcijskom brtvom / with reduction sealing insert					
M 12 x 1,5 RED	1,5 - 5,0	5,0	14,0	4220712	50
M 16 x 1,5 RED	2,5 - 7,0	5,0	17,0	4220716	50
M 20 x 1,5 RED	4,0 - 10,0	6,0	22,0	4220720	50
M 25 x 1,5 RED	5,0 - 13,0	7,0	27,0	4220725	25
M 32 x 1,5 RED	7,0 - 17,0	8,0	34,0	4220732	20
M 40 x 1,5 RED	10,0 - 22,0	8,0	42,0	4220740	10
M 50 x 1,5 RED	17,0 - 29,0	9,0	55,0	4220750	5
M 63 x 1,5 RED	28,0 - 40,0	10,0	65,0	4220763	5

Uvodnica kabelska SCHLEMMER-TEC

mesing niklani
metrički navoj, dugi

Cable gland SCHLEMMER-TEC

nickel-plated brass
metric thread, long

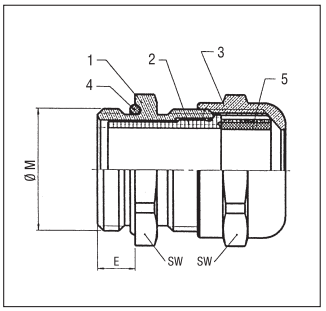

RoHS | IP 68 | EN 50262

Materijal:
- 1/3: tijelo kabelske uvodnice/ glava: mesing niklani
- 2: stezni prsten: poliamid 6
- 4: brtveni prsten za vanjski navoj: nitril
- 5: brtva: neopren

Radna temperatura:
-40°C do 100°C

Boje/izvedbe:
- vanjski navoj: metrički
- dugi navoj
- raspoloživa sa redukcijskom brtvom

Svojstva:
- maksimalna zaštita od izvlačenja kabela
- nepropusnost za vodu i plinove
- dodatni brtveni prsten (4) od nitrila na tijelu kabelske uvodnice

Pribor (vidi poglavlje…):
- Matice (3.3)
- Montažni alat Mon.Za (3.1)

Upotreba:
- strojevi i uređaji
- fotonaponski sustavi
- tehnologija automatizacije

Material:
- 1/3: Gland element/Cap nut: nickel-plated brass
- 2: Clamping shell: Polyamide 6
- 4: Sealing-Ring for External thread: Nitrile
- 5: Sealing: Neoprene

Temperature range:
-40°C to 100°C

Colour(s)/Designs:
- External thread: metric
- long thread
- reduction sealing insert

Characteristics:
- maximum strain relief through clamp lamella
- gas and water-tight
- additional Nitrile sealing-ring (4) on the gland element

Accessories (see chapter…):
- lock nuts (3.3)
- Mounting tool Mon.Za (3.1)

Applications:
- Machine and apparatus construction
- Photovoltaic
- Automation technology

vanjski navoj External thread	za kabel promjera mm Clamping range mm	duljina navoja (E) mm Thread length (E) mm	SW mm SW mm	broj artikla niklani Art. no. nickel-plated	JP kom. PU pcs.
M 12 x 1,5	2,5 - 6,5	15,0	14,0	4220670	50
M 16 x 1,5	4,0 - 9,5	15,0	17,0	4220671	50
M 20 x 1,5	7,0 - 13,0	15,0	22,0	4220673	50
M 25 x 1,5	8,0 - 16,0	15,0	27,0	4220675	25
M 32 x 1,5	11,0 - 21,0	15,0	34,0	4220677	20
M 40 x 1,5	15,0 - 27,0	15,0	42,0	4220678	10
M 50 x 1,5	22,0 - 35,0	15,0	55,0	4220679	5
M 63 x 1,5	35,0 - 48,0	15,0	65,0	4220680	5
sa redukcijskom brtvom / with reduction sealing insert					
M 12 x 1,5 RED	1,5 - 5,0	15,0	14,0	4220770	50
M 16 x 1,5 RED	2,5 - 7,0	15,0	17,0	4220771	50
M 20 x 1,5 RED	4,0 - 10,0	15,0	22,0	4220773	50
M 25 x 1,5 RED	5,0 - 13,0	15,0	27,0	4220775	25
M 32 x 1,5 RED	7,0 - 17,0	15,0	34,0	4220777	20
M 40 x 1,5 RED	10,0 - 22,0	15,0	42,0	4220778	10
M 50 x 1,5 RED	17,0 - 29,0	15,0	55,0	4220779	5
M 63 x 1,5 RED	28,0 - 40,0	15,0	65,0	4220780	5

Uvodnica kabelska SCHLEMMER-TEC

mesing niklani
NPT-navoj

Cable gland SCHLEMMER-TEC

nickel-plated brass
NPT-thread

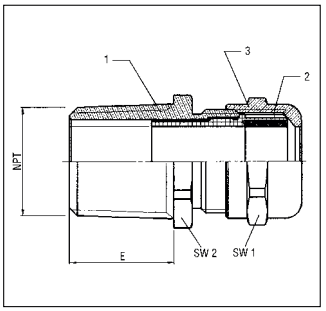

RoHS | IP 68

Materijal:
- 1/3: tijelo kabelske uvodnice/ glava: mesing niklani
- 2: brtva: neopren

Radna temperatura:
-40°C do 100°C

Boje/izvedbe:
- vanjski navoj: NPT
- raspoloživa sa redukcijskom brtvom

Svojstva:
- maksimalna zaštita od izvlačenja kabela
- nepropusnost za vodu i plinove

Pribor (vidi poglavlje…):
- Matice (3.3)
- Montažni alat Mon.Za (3.1)

Upotreba:
- strojevi i uređaji
- fotonaponski sustavi
- tehnologija automatizacije

Material:
- 1/3: Gland element/Cap nut: nickel-plated brass
- 2: Sealing: Neoprene

Temperature range:
-40°C to 100°C

Colour(s)/Designs:
- External thread: NPT
- reduction sealing insert

Characteristics:
- maximum strain relief through clamp lamella
- gas and water-tight

Accessories (see chapter…):
- lock nuts (3.3)
- Mounting tool Mon.Za (3.1)

Applications:
- Machine and apparatus construction
- Photovoltaic
- Automation technology

vanjski navoj External thread	za kabel promjera mm Clamping range mm	duljina navoja (E) mm Thread length (E) mm	SW 1 mm SW 1 mm	SW 1 mm SW 1 mm	broj artikla niklani Art. no. nickel-plated	JP kom. PU pcs.
NPT 3/8”	4,0 - 9,5	15,0	17,0	18,0	4220800	50
NPT 1/2”	7,0 - 13,0	20,0	22,0	23,0	4220801	50
NPT 3/4”	8,0 - 16,0	20,0	27,0	28,0	4220802	20
NPT 1”	11,0 - 21,0	25,0	34,0	36,0	4220803	20
sa redukcijskom brtvom / with reduction sealing insert						
NPT 3/8” RED	2,5 - 7,0	15,0	17,0	18,0	4220810	50
NPT 1/2” RED	4,0 - 10,0	20,0	22,0	23,0	4220811	50
NPT 3/4” RED	5,0 - 13,0	20,0	27,0	28,0	4220812	20
NPT 1” RED	7,0 - 17,0	25,0	34,0	36,0	4220813	20

Uvodnica kabelska SCHLEMMER-TEC

nehrđajući čelik 1.4404, INOX 316L, metrički navoj, kratki

Cable gland SCHLEMMER-TEC

stainless steel 1.4404, INOX 316L, metric thread, short

RoHS | IP 68 | EN 50262

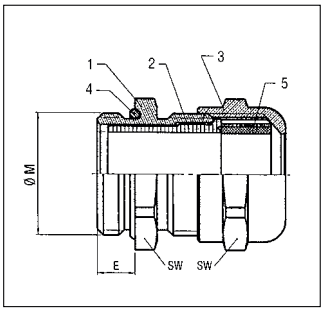

Materijal:
- 1/3: tijelo kabelske uvodnice/ glava: nehrđajući čelik 1.4404, INOX 316L
- 2: stezni prsten: poliamid 6
- 4: brtveni prsten za vanjski navoj: nitril
- 5: brtva: neopren

Radna temperatura:
-40°C do 100°C

Boje/izvedbe:
- vanjski navoj: metrički
- kratki navoj
- raspoloživa sa redukcijskom brtvom

Svojstva:
- maksimalna zaštita od izvlačenja kabela
- nepropusnost za vodu i plinove
- dodatni brtveni prsten (4) od nitrila na tijelu kabelske uvodnice

Pribor (vidi poglavlje…):
- Matice (3.3)
- Montažni alat Mon.Za (3.1)

Upotreba:
- strojevi i uređaji
- tehnologija automatizacije
- prehrambena industrija
- Offshore uređaji
- vjetroelektrane

Material:
- 1/3: Gland element/Cap nut: stainless steel 1.4404, INOX 316L
- 2: Clamping shell: Polyamide 6
- 4: Sealing-Ring for External thread: Nitrile
- 5: Sealing: Neoprene

Temperture range:
-40°C to 100°C

Colour(s)/Designs:
- External thread: metric
- short thread
- reduction sealing insert

Characteristics:
- maximum strain relief through clamp lamella
- gas and water-tight
- additional Nitrile sealing-ring (4) on the gland element

Accessories (see chapter…):
- lock nuts (3.3)
- Mounting tool Mon.Za (3.1)

Applications:
- Machine and apparatus construction
- Automation technology
- Food Industries
- Off-Shore apparatus
- Wind power station

vanjski navoj External thread	za kabel promjera mm Clamping range mm	duljina navoja (E) mm Thread length (E) mm	SW mm SW mm	broj artikla nehrđajući čelik Art. no. stainless steel	JP kom. PU pcs.
M 12 x 1,5	4,5- 6,5	5,0	14,0	4220850	50
M 16 x 1,5	5,0 - 9,5	5,0	17,0	4220851	50
M 20 x 1,5	8,0 - 13,0	6,0	22,0	4220852	50
M 25 x 1,5	9,0 - 16,0	7,0	27,0	4220853	25
M 32 x 1,5	12,0 - 21,0	8,0	34,0	4220854	20
M 40 x 1,5	16,0 - 27,0	8,0	42,0	4220855	10
M 50 x 1,5	23,0 - 35,0	9,0	55,0	4220856	5
M 63 x 1,5	36,0 - 48,0	10,0	65,0	4220857	5
sa redukcijskom brtvom / with reduction sealing insert					
M 12 x 1,5 RED	1,5 - 5,0	5,0	14,0	4220860	100
M 16 x 1,5 RED	2,5 - 7,0	5,0	17,0	4220861	50
M 20 x 1,5 RED	4,0 - 10,0	6,0	22,0	4220862	50
M 25 x 1,5 RED	5,0 - 13,0	7,0	27,0	4220863	25
M 32 x 1,5 RED	7,0 - 17,0	8,0	34,0	4220864	20
M 40 x 1,5 RED	10,0 - 22,0	8,0	42,0	4220865	10
M 50 x 1,5 RED	17,0 - 29,0	9,0	55,0	4220866	5
M 63 x 1,5 RED	28,0 - 40,0	10,0	65,0	4220867	5

Pregled
WADI-TEC kabelske uvodnice

Overview
WADI-TEC cable glands

RoHS | IP 68

					ECA verzija zaštita od izvlačenja pomoću steznog prstena **ECA Version** Strain relief through clamping ring
	 duga brtva, 2-djelna **long sealing, two parts**	 **brtve sa više otvora** **multi-conductor sealing**	 **ravna brtva** **flat sealing**	 **kratka brtva** **short sealing**	 **kratka brtva / stezni prsten** **short sealing/clamping ring**
poliamid **Polyamide**					
mesing niklani **nickel-plated brass**					
PVDF **PVDF**					
nehrđajući čelik **Stainless steel** **1.4404,** **316L**					

Uvodnica kabelska WADI-TEC

Poliamid
ECA-stezni prsten
PG-/metrički navoj

Cable gland WADI-TEC

Polyamide
ECA-Clamping-Ring
PG-/metric thread

RoHS | IP 68 | EN 50262

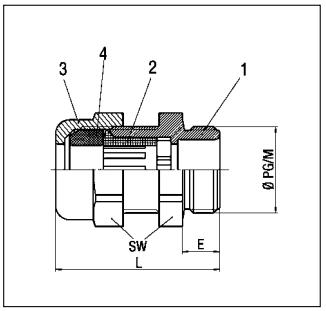

Materijal:
- 1/3: tijelo kabelske uvodnice/ glava: poliamid 6, ojačano s 25% staklenih vlakana
- 2: ECA-stezni prsten: polikarbonat
- 4: brtva: tefabloc

Radna temperatura:
-30°C do 120°C

Boje/izvedbe:
- svjetlosiva, crna
- vanjski navoj: PG/metrički
- kratki/dugi navoj
- ECA-stezni prsten

Svojstva:
- zaštita od izvlačenja pomoću steznog prstena
- nepropusnost za vodu i plinove
- potpuno zaštićeno od okretanja
- može se kombinirati s raznim brtvenim umecima

Pribor (vidi poglavlje…):
- Matice (3.3)
- Montažni alat Mon.Za (3.1)

Upotreba:
- strojevi i uređaji
- fotonaponski sustavi
- tehnologija automatizacije
- tehnologija mjernih i kontrolnih instrumenata

Material:
- 1/3: Gland element/Cap nut: Polyamide 6, 25 % glassfiber reinforced
- 2: ECA-Clamping-Ring: Polycarbonate
- 4: Sealing: Tefabloc

Temperature range:
-30°C to 120°C

Colour(s)/Designs:
- light grey, jet black
- External thread: PG/metric
- short/long thread
- ECA-Clamping-Ring

Characteristics:
- strain relief through clamping ring
- gas and water-tight
- completely twist protected
- combinable with various sealing inserts

Accessories (see chapter…):
- lock nuts (3.3)
- Mounting tool Mon.Za (3.1)

Applications:
- Machine and apparatus construction
- Photovoltaic
- Automation technology
- Measuring and control engineering

vanjski navoj External thread	za kabel promjera mm Clamping range mm	duljina navoja (E) mm Thread length (E) mm	SW mm SW mm	ukupna duljina (L) mm Complete length (L) mm	broj artikla svjetlosiva RAL 7035 Art. no. light grey RAL 7035	broj artikla crna RAL 9005 Art. no. jet black RAL 9005	JP kom. PU pcs.
PG, kratki navoj / PG, short thread							
PG 7	3,0 - 6,0	8,0	15,0	31,0	5313610	5313620	50
PG 9	5,0 - 8,0	8,0	19,0	32,0	5313611	5313621	50
PG 11	6,0 - 10,0	8,0	22,0	35,0	5313612	5313622	50
PG 13,5	8,0 - 12,0	9,0	24,0	36,0	5313613	5313623	50
PG 16	10,0 - 14,0	10,0	27,0	40,0	5313614	5313624	50
PG 21	11,5 - 18,0	11,0	33,0	44,0	5313615	5313625	20
PG 29	15,0 - 24,0	12,0	42,0	55,0	5313616	5313626	20
PG, dugi navoj / PG, long thread							
PG 7	3,0 - 6,0	15,0	15,0	38,0	5313710	5313720	50
PG 9	5,0 - 8,0	15,0	19,0	39,0	5313711	5313721	50
PG 11	6,0 - 10,0	15,0	22,0	42,0	5313712	5313722	50
PG 13,5	8,0 - 12,0	15,0	24,0	42,0	5313713	5313723	50
PG 16	10,0 - 14,0	15,0	27,0	45,0	5313714	5313724	50
PG 21	11,5 - 18,0	15,0	33,0	49,0	5313715	5313725	20
PG 29	15,0 - 24,0	15,0	42,0	58,0	5313716	5313726	20
PG 36	24,0 - 34,0	18,0	55,0	65,0	5313717	5313727	10
PG 42	34,0 - 42,0	18,0	65,0	67,0	5313718	5313728	10
PG 48	40,0 - 48,0	18,0	70,0	67,0	5313719	5313729	10
metrički, kratki navoj / metric, short thread							
M 16 x 1,5	5,0 - 8,0	8,0	19,0	32,0	5313640	5313650	50
M 20 x 1,5/13	8,0 - 12,0	9,0	24,0	36,0	5313641	5313651	50
M 20 x 1,5/16	10,0 - 14,0	9,0	27,0	39,0	5313644	5313654	50
M 25 x 1,5	11,5 - 18,0	11,0	33,0	44,0	5313642	5313652	20
M 32 x 1,5	15,0 - 24,0	12,0	42,0	55,0	5313643	5313653	20
metrički, dugi navoj / metric, long thread							
M 16 x 1,5	5,0 - 8,0	15,0	19,0	39,0	5313670	5313680	50
M 20 x 1,5/13	8,0 - 12,0	15,0	24,0	42,0	5313671	5313681	50
M 20 x 1,5/16	10,0 - 14,0	15,0	27,0	45,0	5313677	5313687	50
M 25 x 1,5	11,5 - 18,0	15,0	33,0	48,0	5313672	5313682	20
M 32 x 1,5	15,0 - 24,0	15,0	42,0	58,0	5313673	5313683	20
M 40 x 1,5	24,0 - 34,0	15,0	55,0	63,0	5313674	5313684	10
M 50 x 1,5	34,0 - 42,0	15,0	65,0	65,0	5313675	5313685	10
M 63 x 1,5	40,0 - 48,0	15,0	70,0	65,0	5313676	5313686	5

Uvodnica kabelska WADI-TEC

Poliamid
kratka brtva
PG-/metrički navoj

Cable gland WADI-TEC

Polyamide
short sealing
PG-/metric thread

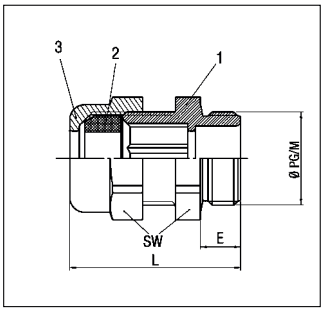

RoHS | IP 68 | EN 50262

Materijal:
- 1/3: tijelo kabelske uvodnice/ glava: poliamid 6, ojačano s 25% staklenih vlakana
- 2: brtva: tefabloc

Radna temperatura:
-30°C do 120°C

Boje/izvedbe:
- svjetlosiva, crna
- vanjski navoj: PG/metrički
- kratki/dugi navoj
- kratka brtva

Svojstva:
- nepropusnost za vodu i plinove
- potpuno zaštićeno od okretanja
- može se kombinirati s raznim brtvenim umecima

Pribor (vidi poglavlje…):
- Matice (3.3)
- Montažni alat Mon.Za (3.1)

Upotreba:
- strojevi i uređaji
- fotonaponski sustavi
- tehnologija automatizacije
- tehnologija mjernih i kontrolnih instrumenata

Material:
- 1/3: Gland element/Cap nut: Polyamide 6, 25 % glassfiber reinforced
- 2: Sealing: Tefabloc

Temperature range:
-30°C to 120°C

Colour(s)/Designs:
- light grey, jet black
- External thread: PG/metric
- short/long thread
- short sealing

Characteristics:
- gas and water-tight
- completely twist protected
- combinable with various sealing inserts

Accessories (see chapter…):
- lock nuts (3.3)
- Mounting tool Mon.Za (3.1)

Applications:
- Machine and apparatus construction
- Photovoltaic
- Automation technology
- Measuring and control engineering

vanjski navoj External thread	za kabel promjera mm Clamping range mm	duljina navoja (E) mm Thread length (E) mm	SW mm SW mm	ukupna duljina (L) mm Complete length (L) mm	broj artikla svjetlosiva RAL 7035 Art. no. light grey RAL 7035	broj artikla crna RAL 9005 Art. no. jet black RAL 9005	JP kom. PU pcs.
PG, kratki navoj / PG, short thread							
PG 7	3,0 - 6,0	8,0	15,0	31,0	5211107	5211307	50
PG 9	4,5 - 8,0	8,0	19,0	32,0	5211109	5211309	50
PG 11	6,5 - 10,5	8,0	22,0	35,0	5211111	5211311	50
PG 13,5	7,0 - 12,0	9,0	24,0	36,0	5211113	5211313	50
PG 16	9,0 - 14,0	10,0	27,0	40,0	5211116	5211316	50
PG 21	11,5 - 18,0	11,0	33,0	44,0	5211121	5211321	20
PG 29	15,0 - 24,5	12,0	42,0	55,0	5211129	5211329	20
PG, dugi navoj / PG, long thread							
PG 7	3,0 - 6,0	15,0	15,0	38,0	5211150	5211350	50
PG 9	4,5 - 8,0	15,0	19,0	39,0	5211151	5211351	50
PG 11	6,5 - 10,5	15,0	22,0	42,0	5211152	5211352	50
PG 13,5	7,0 - 12,0	15,0	24,0	42,0	5211153	5211353	50
PG 16	9,0 - 14,0	15,0	27,0	45,0	5211154	5211354	50
PG 21	11,5 - 18,0	15,0	33,0	49,0	5211155	5211355	20
PG 29	15,0 - 24,5	15,0	42,0	58,0	5211156	5211356	20
PG 36	24,0 - 34,0	18,0	55,0	65,0	5211157	5211357	10
PG 42	34,0 - 42,0	18,0	65,0	67,0	5211158	5211358	10
PG 48	40,0 - 48,0	18,0	70,0	67,0	5211159	5211359	10
metrički, kratki navoj / metric, short thread							
M 16 x 1,5	4,5 - 8,0	8,0	19,0	32,0	5211416	5211616	50
M 20 x 1,5/13	7,0 - 12,0	9,0	24,0	36,0	5211420	5211620	50
M 20 x 1,5/16	9,0 - 14,0	9,0	27,0	39,0	5211421	5211621	50
M 25 x 1,5	11,5 - 18,0	11,0	33,0	44,0	5211425	5211625	20
M 32 x 1,5	15,0 - 24,5	12,0	42,0	55,0	5211432	5211632	20
metrički, dugi navoj / metric, long thread							
M 16 x 1,5	4,5 - 8,0	15,0	19,0	39,0	5211441	5211641	50
M 20 x 1,5/13	7,0 - 12,0	15,0	24,0	42,0	5211442	5211642	50
M 20 x 1,5/16	9,0 - 14,0	15,0	27,0	45,0	5211448	5211648	50
M 25 x 1,5	11,5 - 18,0	15,0	33,0	48,0	5211443	5211643	20
M 32 x 1,5	15,0 - 24,5	15,0	42,0	58,0	5211444	5211644	20
M 40 x 1,5	24,0 - 34,0	15,0	55,0	63,0	5211445	5211645	10
M 50 x 1,5	34,0 - 42,0	15,0	65,0	65,0	5211446	5211646	10
M 63 x 1,5	40,0 - 48,0	15,0	70,0	65,0	5211447	5211647	5

Uvodnica kabelska WADI-TEC

Poliamid
duga brtva, 2-djelna
PG-/metrički navoj

Cable gland WADI-TEC

Polyamide
long sealing, two parts
PG-/metric thread

RoHS | IP 68 | EN 50262

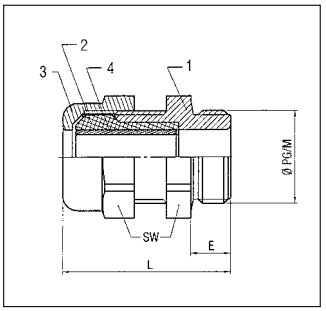

Materijal:
- 1/3: tijelo kabelske uvodnice/ glava: poliamid 6, ojačano s 25% staklenih vlakana
- 2: brtva: santopren
- 4: brtva: nitril

Radna temperatura:
-30°C do 120°C

Boje/izvedbe:
- svjetlosiva, crna
- vanjski navoj: PG/metrički
- kratki/dugi navoj
- duga brtva, 2-djelna

Svojstva:
- nepropusnost za vodu i plinove
- potpuno zaštićeno od okretanja
- može se kombinirati s raznim brtvenim umecima

Pribor (vidi poglavlje…):
- Matice (3.3)
- Montažni alat Mon.Za (3.1)

Upotreba:
- strojevi i uređaji
- fotonaponski sustavi
- tehnologija automatizacije
- tehnologija mjernih i kontrolnih instrumenata

Material:
- 1/3: Gland element/Cap nut: Polyamide 6, 25 % glassfiber reinforced
- 2: Sealing: Santoprene
- 4: Sealing: Nitrile

Temperature range:
-30°C to 120°C

Colour(s)/Designs:
- light grey, jet black
- External thread: PG/metric
- short/long thread
- long sealing, two parts

Characteristics:
- gas and water-tight
- completely twist protected
- combinable with various sealing inserts

Accessories (see chapter…):
- lock nuts (3.3)
- Mounting tool Mon.Za (3.1)

Applications:
- Machine and apparatus construction
- Photovoltaic
- Automation technology
- Measuring and control engineering

vanjski navoj External thread	za kabel promjera mm Clamping range mm	duljina navoja (E) mm Thread length (E) mm	SW mm SW mm	ukupna duljina (L) mm Complete length (L) mm	broj artikla svjetlosiva RAL 7035 Art. no. light grey RAL 7035	broj artikla crna RAL 9005 Art. no. jet black RAL 9005	JP kom. PU pcs.
PG, kratki navoj / PG, short thread							
PG 9	3,0 - 8,0	8,0	19,0	32,0	5320001	5320051	50
PG 11	5,0 - 11,0	8,0	22,0	35,0	5320002	5320052	50
PG 13,5	5,0 - 12,5	9,0	24,0	36,0	5320003	5320053	50
PG 16	7,0 - 14,5	10,0	27,0	40,0	5320004	5320054	50
PG 21	10,0 - 18,0	11,0	33,0	44,0	5320005	5320055	20
PG 29	14,0 - 24,0	12,0	42,0	55,0	5320006	5320056	20
PG 36	22,0 - 32,0	18,0	55,0	65,0	5320007	5320057	10
PG 42	30,0 - 40,0	18,0	65,0	67,0	5320008	5320058	10
PG 48	34,0 - 46,0	18,0	70,0	67,0	5320009	5320059	5
PG, dugi navoj / PG, long thread							
PG 9	3,0 - 8,0	15,0	19,0	39,0	5320071	5320091	50
PG 11	5,0 - 11,0	15,0	22,0	42,0	5320072	5320092	50
PG 13,5	5,0 - 12,5	15,0	24,0	42,0	5320073	5320093	50
PG 16	7,0 - 14,5	15,0	27,0	45,0	5320074	5320094	50
PG 21	10,0 - 18,0	15,0	33,0	49,0	5320075	5320095	20
PG 29	14,0 - 24,0	15,0	42,0	58,0	5320076	5320096	20
metrički, kratki navoj / metric, short thread							
M 16 x 1,5	3,0 - 8,0	8,0	19,0	32,0	5320100	5320160	50
M 20 x 1,5/13	5,0 - 12,5	9,0	24,0	36,0	5320101	5320161	50
M 20 x 1,5/16	7,0 - 14,5	9,0	27,0	39,0	5320104	5320164	50
M 25 x 1,5	10,0 - 18,0	11,0	33,0	44,0	5320102	5320162	20
M 32 x 1,5	14,0 - -24,0	12,0	42,0	55,0	5320103	5320163	20
M 40 x 1,5	22,0 - 32,0	15,0	55,0	63,0	5320105	5320165	10
M 50 x 1,5	30,0 - 40,0	15,0	65,0	65,0	5320106	5320166	10
M 63 x 1,5	34,0 - 46,0	15,0	70,0	65,0	5320107	5320167	5
metrički, dugi navoj / metric, long thread							
M 16 x 1,5	3,0 - 8,0	15,0	19,0	39,0	5320120	5320170	50
M 20 x 1,5/13	5,0 - 12,5	15,0	24,0	42,0	5320121	5320171	50
M 20 x 1,5/16	7,0 - 14,5	15,0	27,0	45,0	5320127	5320177	50
M 25 x 1,5	10,0 - 18,0	15,0	33,0	48,0	5320122	5320172	20
M 32 x 1,5	14,0 - 24,0	15,0	42,0	58,0	5320123	5320173	20

Uvodnica kabelska WADI-TEC

Poliamid
sa brtvom za plosnate kabele
PG-navoj, kratki

Cable gland WADI-TEC

Polyamide
flat cable sealing
PG-thread, short

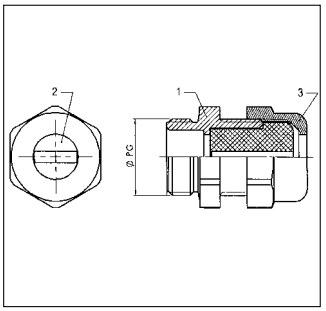

RoHS | IP 68

Materijal:
- 1/3: tijelo kabelske uvodnice/ glava: poliamid 6, ojačano s 25% staklenih vlakana
- 2: brtva: tefabloc

Radna temperatura:
-30°C do 120°C

Boje/izvedbe:
- svjetlosiva, srebrnosiva, crna
- vanjski navoj: PG
- kratki navoj
- duga brtva za plosnati kabel zaobljeni, pravokutni, ovalni

Svojstva:
- nepropusnost za vodu i plinove
- potpuno zaštićeno od okretanja
- može se kombinirati s raznim brtvenim umecima

Pribor (vidi poglavlje…):
- Matice (3.3)
- Montažni alat Mon.Za (3.1)

Upotreba:
- strojevi i uređaji
- fotonaponski sustavi
- tehnologija automatizacije
- tehnologija mjernih i kontrolnih instrumenata

Material:
- 1/3: Gland element/Cap nut: Polyamide 6, 25 % glassfiber reinforced
- 2: Sealing: Tefabloc

Temperature range:
-30°C to 120°C

Colour(s)/Designs:
- light grey, silver grey, jet black
- External thread: PG
- short thread
- long sealing for flat cables, round, angular, oval

Characteristics:
- gas and water-tight
- completely twist protected
- combinable with various sealing inserts

Accessories (see chapter…):
- lock nuts (3.3)
- Mounting tool Mon.Za (3.1)

Applications:
- Machine and apparatus construction
- Photovoltaic
- Automation technology
- Measuring and control engineering

	plosnati kabel zaobljeni Flat cable, round			plosnati kabel pravokutni Flat cable, angular			plosnati kabel ovalni Flat cable, oval			
vanjski navoj External thread	za kabel promjera mm Clamping range mm	broj artikla svjetlosiva RAL 7035 Art. no. light grey RAL 7035	broj artikla crna RAL 9005 Art. no. jet black RAL 9005	za kabel promjera mm Clamping range mm	broj artikla svjetlosiva RAL 7035 Art. no. light grey RAL 7035	broj artikla crna RAL 9005 Art. no. jet black RAL 9005	za kabel promjera mm Clamping range mm	broj artikla svjetlosiva RAL 7035 Art. no. light grey RAL 7035	broj artikla crna RAL 9005 Art. no. jet black RAL 9005	JP kom. PU pcs.
PG 9	3,5x 5,5	5320300	5320500							50
PG 11	2,8x10,5	5320305	5320505							50
PG 11	3,5x 9,0	5320306	5320506							50
PG 11	4,0x 6,0	5320307	5320507							50
PG 13,5	3,0x12,0	5320310	5320510				5,0x 8,0	5320375	5320575	50
PG 13,5	5,0x11,0	5320311	5320511				5,0x12,0	5320376	5320576	50
PG 16	5,0x12,0	5320315	5320515	8,0x12,0	5320351	5320551	5,0x12,0	5320380	5320580	50
PG 16	5,0x16,0	5320316	5320516				5,5x 8,5	5320381	5320581	50
PG 16	7,5x14,0	5320317	5320517				5,0x15,0	5320382	5320582	50
PG 16							6,0x15,0	5320383	5320583	50
PG 16							7,0x14,0	5320384	5320584	50
PG 21	5,0x17,0	5320320	5320520	4,0x15,0	5320355	5320555	5,0x16,0	5320385	5320585	20
PG 21	7,0x18,0	5320321	5320521				7,0x16,5	5320386	5320586	20
PG 21	9,0x15,0	5320322	5320522				7,0x20,0	5320387	5320587	20
PG 29	6,0x29,0	5320325	5320525	6,0x26,0	5320360	5320560	10,0x27,0	5320390	5320590	20
PG 29	8,0x25,0	5320326	5320526	7,0x26,0	5320361	5320561				20
PG 29	10,0x25,0	5320327	5320527							20
PG 29	13,0x28,0	5320328	5320528							20
PG 36	6,0x30,0	5320330	5320530	5,0x36,0	5320365	5320565	6,5x32,0	5320393	5320593	20
PG 36	6,0x36,0	5320331	5320531	8,0x30,0	5320366	5320566	11,0x35,0	5320394	5320594	20
PG 36	8,0x36,0	5320332	5320532							20
PG 36	11,0x34,0	5320333	5320533							20
PG 36	12,0x35,0	5320334	5320534							20
PG 42	10,0x38,0	5320335	5320535	5,5x37,0	5320370	5320570	6,0x41,0	5320396	5320596	20
PG 42	13,0x35,0	5320336	5320536	6,0x39,0	5320371	5320571	9,0x38,0	5320397	5320597	20
PG 42	14,0x37,0	5320337	5320537							20
PG 48	6,5x47,0	5320342	5320542							20
PG 48	9,0x43,0	5320343	5320543							20
PG 48	14,5x39,0	5320344	5320544							20
PG 48	15,0x45,0	5320345	5320545							20

Uvodnica kabelska WADI-TEC

Poliamid
sa brtvom za plosnate kabele
metrički navoj

Cable gland WADI-TEC

Polyamide
flat cable sealing
metric thread

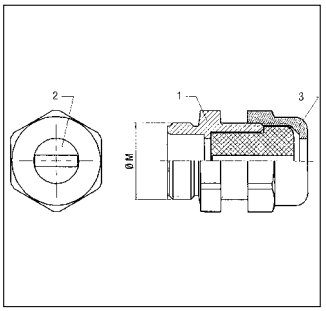

RoHS | IP 68 | EN 50262

Materijal:
- 1/3: tijelo kabelske uvodnice/ glava: poliamid PA 6, ojačano s 25% staklenih vlakana
- 2: brtva: tefabloc

Radna temperatura:
-30°C do 120°C

Boje/izvedbe:
- svjetlosiva, srebrnosiva, crna
- vanjski navoj: metrički
- kratki/dugi navoj
- duga brtva za plosnati kabel zaobljeni, pravokutni, ovalni

Svojstva:
- nepropusnost za vodu i plinove
- potpuno zaštićeno od okretanja
- može se kombinirati s raznim brtvenim umecima

Pribor (vidi poglavlje…):
- Matice (3.3)
- Montažni alat Mon.Za (3.1)

Upotreba:
- strojevi i uređaji
- fotonaponski sustavi
- tehnologija automatizacije
- tehnologija mjernih i kontrolnih instrumenata

Material:
- 1/3: Gland element/Cap nut: Polyamide PA 6, 25 % glassfiber reinforced
- 2: Sealing: Tefabloc

Temperature range:
-30°C to 120°C

Colour(s)/Designs:
- light grey, silver grey, jet black
- External thread: metric
- short/long thread
- long sealing for flat cables round, angular, oval

Characteristics:
- gas and water-tight
- completely twist protected
- combinable with various sealing inserts

Accessories (see chapter…):
- lock nuts (3.3)
- Mounting tool Mon.Za (3.1)

Applications:
- Machine and apparatus construction
- Photovoltaic
- Automation technology
- Measuring and control engineering

	plosnati kabel zaobljeni Flat cable, round			plosnati kabel pravokutni Flat cable, angular			plosnati kabel ovalni Flat cable, oval			
vanjski navoj External thread	za kabel promjera mm Clamping range mm	broj artikla svjetlosiva RAL 7035 Art. no. light grey RAL 7035	broj artikla crna RAL 9005 Art. no. jet black RAL 9005	za kabel promjera mm Clamping range mm	broj artikla svjetlosiva RAL 7035 Art. no. light grey RAL 7035	broj artikla crna RAL 9005 Art. no. jet black RAL 9005	za kabel promjera mm Clamping range mm	broj artikla svjetlosiva RAL 7035 Art. no. light grey RAL 7035	broj artikla crna RAL 9005 Art. no. jet black RAL 9005	JP kom. PU pcs.
kratki navoj / short thread										
M 16 x 1,5	3,5x 5,5	5320710	5320810							5
M 20x1,5/13	3,0x12,0	5320715	5320815				5,0x 8,0	5320770	5320870	50
M 20x1,5/13	5,0x11,0	5320716	5320816				5,0x12,0	5320771	5320871	50
M 20x1,5/16	5,0x12,0	5320717	5320817	8,0x12,0	5320785	5320885	5,5x 8,5	5320772	5320872	50
M 20x1,5/16	7,5x14,0	5320718	5320818				7,0x14,0	5320773	5320873	50
M 25 x 1,5	5,0x16,0	5320720	5320820	4,0x15,0	5320786	5320886	5,0x15,0	5320774	5320874	20
M 25 x 1,5	5,0x17,0	5320721	5320821				5,0x16,0	5320775	5320875	20
M 25 x 1,5	7,0x18,0	5320722	5320822				6,0x15,0	5320776	5320876	20
M 25 x 1,5	9,0x15,0	5320723	5320823				7,0x16,5	5320777	5320877	20
M 32 x 1,5	8,0x25,0	5320730	5320830				7,0x20,0	5320780	5320880	20
M 32 x 1,5	10,0x25,0	5320731	5320831							20
dugi navoj / long thread										
M 16 x 1,5	3,5x 5,5	5320732	5320832							50
M 20x1,5/13	3,0x12,0	5320735	5320835				5,0x 8,0	5320700	5320800	50
M 20x1,5/13	5,0x11,0	5320736	5320836				5,0x12,0	5320701	5320801	50
M 20x1,5/16	5,0x12,0	5320737	5320837	8,0x12,0	5320787	5320887	5,5x 8,5	5320702	5320802	50
M 20x1,5/16	7,5x14,0	5320738	5320838				7,0x14,0	5320703	5320803	50
M 25 x 1,5	5,0x16,0	5320740	5320840	4,0x15,0	5320788	5320888	5,0x15,0	5320704	5320804	20
M 25 x 1,5	5,0x17,0	5320741	5320841				5,0x16,0	5320705	5320805	20
M 25 x 1,5	7,0x18,0	5320742	5320842				6,0x15,0	5320706	5320806	20
M 25 x 1,5	9,0x15,0	5320743	5320843				7,0x16,5	5320707	5320807	20
M 32 x 1,5	8,0x25,0	5320745	5320845				7,0x20,0	5320708	5320808	20
M 32 x 1,5	10,0x25,0	5320746	5320846							20
M 40 x 1,5	6,0x29,0	5320747	5320847	5,0x36,0	5320790	5320890	6,5x32,0	5320781	5320881	10
M 40 x 1,5	6,0x30,0	5320748	5320848	6,0x26,0	5320791	5320891	10,0x27,0	5320782	5320882	10
M 40 x 1,5	6,0x36,0	5320749	5320849	7,0x26,0	5320792	5320892	11,0x35,0	5320783	5320883	10
M 40 x 1,5	8,0x36,0	5320750	5320850	8,0x30,0	5320793	5320893				10
M 40 x 1,5	11,0x34,0	5320751	5320851							10
M 40 x 1,5	12,0x35,0	5320752	5320852							10
M 40 x 1,5	13,0x28,0	5320753	5320853							10
M 50 x 1,5	10,0x38,0	5320755	5320855	5,5x37,0	5320794	5320894	6,0x41,0	5320784	5320884	10
M 50 x 1,5	13,0x35,0	5320756	5320856	6,0x39,0	5320795	5320895	9,0x38,0	5320796	5320896	10
M 50 x 1,5	14,0x37,0	5320757	5320857							10
M 63 x 1,5	6,5x47,0	5320758	5320858							10
M 63 x 1,5	9,0x43,0	5320759	5320859							10
M 63 x 1,5	14,5x39,0	5320760	5320860							10
M 63 x 1,5	15,0x45,0	5320761	5320861							10

Uvodnica kabelska WADI-TEC Duplo

Poliamid
brtva sa više otvora
PG-navoj, kratki

Cable gland WADI-TEC Duplo

Polyamide
multi-holed sealing
PG-thread, short

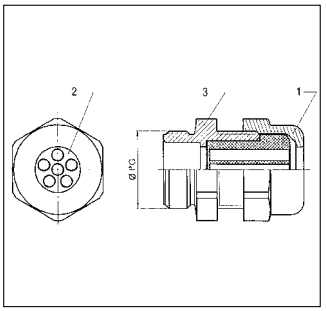

RoHS | IP 68

Materijal:
- 1/3: tijelo kabelske uvodnice/ glava: poliamid 6, ojačano s 25% staklenih vlakana
- 2: brtva: tefabloc

Radna temperatura:
-30°C do 120°C

Boje/izvedbe:
- svjetlosiva, srebrnosiva, crna
- vanjski navoj: PG
- kratki navoj
- duga brtva sa više otvora
- brtvljenje otvora
- bez potrebe za čepovima otvora brtve

Svojstva:
- nepropusnost za vodu i plinove
- potpuno zaštićeno od okretanja
- može se kombinirati s raznim brtvenim umecima

Pribor (vidi poglavlje…):
- Matice (3.3)
- Montažni alat Mon.Za (3.1)

Upotreba:
- strojevi i uređaji
- fotonaponski sustavi
- tehnologija automatizacije
- tehnologija mjernih i kontrolnih instrumenata

Material:
- 1/3: Gland element/Cap nut: Polyamide 6, 25 % glassfiber reinforced
- 2: Sealing: Tefabloc

Temperature range:
-30°C to 120°C

Colour(s)/Designs:
- light grey, silver grey, jet black
- External thread: PG
- short thread
- long multi-holed sealing
- Blind hole sealing
- No blind pin required

Characteristics:
- gas and water-tight
- completely twist protected
- combinable with various sealing inserts

Accessories (see chapter…):
- lock nuts (3.3)
- Mounting tool Mon.Za (3.1)

Applications:
- Machine and apparatus construction
- Photovoltaic
- Automation technology
- Measuring and control engineering

vanjski navoj External thread	broj otvora Quantity	promjer otvora mm Hole diameter mm	duljina navoja (E) mm Thread length (E) mm	SW (L) mm SW mm	ukupna duljina mm Complete length (L) mm	broj artikla svjetlosiva RAL 7035 Art. no. light grey RAL 7035	broj artikla crna RAL 9005 Art. no. jet black RAL 9005	JP kom. PU pcs.
PG 7	1 x	4,0	8,0	15,0	31,0	5315800	5315600	50
PG 7	1 x	5,0	8,0	15,0	31,0	5315801	5315601	50
PG 9	1 x	5,0	8,0	19,0	32,0	5315810	5315610	50
PG 9	2 x	1,0	8,0	19,0	32,0	5315811	5315611	50
PG 9	2 x	3,0	8,0	19,0	32,0	5315812	5315612	50
PG 9	2 x	3,5	8,0	19,0	32,0	5315813	5315613	50
PG 9	2 x	4,0	8,0	19,0	32,0	5315814	5315614	50
PG 9	3 x	3,0	8,0	19,0	32,0	5315815	5315615	50
PG 9	4 x	3,0	8,0	22,0	34,0	5315816	5315616	50
PG 9	4 x	4,0	8,0	22,0	34,0	5315817	5315617	50
PG 11	2 x	2,3	8,0	24,0	35,0	5315820	5315620	50
PG 11	2 x	3,0	8,0	24,0	35,0	5315821	5315621	50
PG 11	2 x	3,5	8,0	24,0	35,0	5315110	5315500	50
PG 11	2 x	4,0	8,0	27,0	38,0	5315822	5315622	50
PG 11	2 x	5,0	8,0	24,0	35,0	5315111	5315501	50
PG 11	2 x	6,0	8,0	27,0	38,0	5315112	5315502	50
PG 11	3 x	3,0	8,0	24,0	35,0	5315823	5315623	50
PG 11	3 x	3,5	8,0	24,0	35,0	5315113	5315503	50
PG 11	3 x	4,0	8,0	24,0	36,0	5315824	5315624	50
PG 11	3 x	5,0	8,0	27,0	38,0	5315114	5315504	50
PG 11	3 x	5,3	8,0	24,0	35,0	5315825	5315625	50
PG 11	4 x	1,5	8,0	27,0	38,0	5315826	5315626	50
PG 11	4 x	3,5	8,0	24,0	35,0	5315827	5315627	50
PG 11	6 x	2,0	8,0	24,0	35,0	5315828	5315628	50
PG 11	6 x	2,5	8,0	24,0	35,0	5315829	5315629	50
PG 13,5	2 x	3,0	9,0	24,0	36,0	5315830	5315630	50
PG 13,5	2 x	5,0	9,0	24,0	36,0	5315831	5315631	50
PG 13,5	2 x	6,0	9,0	24,0	36,0	5315130	5315510	50
PG 13,5	3 x	2,0	9,0	24,0	36,0	5315832	5315632	50
PG 13,5	3 x	3,0	9,0	24,0	36,0	5315833	5315633	50
PG 13,5	3 x	4,0	9,0	24,0	36,0	5315834	5315634	50
PG 13,5	3 x	5,3	9,0	24,0	36,0	5315835	5315635	50
PG 13,5	3 x	6,0	9,0	27,0	38,0	5315836	5315636	50
PG 13,5	4 x	3,0	9,0	24,0	36,0	5315837	5315637	50
PG 13,5	4 x	4,0	9,0	24,0	36,0	5315838	5315638	50
PG 13,5	4 x	5,0	9,0	27,0	38,0	5315839	5315639	50
PG 13,5	4 x	5,3	9,0	27,0	38,0	5315840	5315640	50
PG 13,5	6 x	3,5	9,0	24,0	36,0	5315841	5315641	50
PG 13,5	10 x	2,0	9,0	24,0	36,0	5315842	5315642	50

3.1

vanjski navoj External thread	broj otvora Quantity	promjer otvora mm Hole diameter mm	duljina navoja (E) mm Thread length (E) mm	SW (L) mm SW mm	ukupna duljina mm Complete length (L) mm	broj artikla svjetlosiva RAL 7035 Art. no. light grey RAL 7035	broj artikla crna RAL 9005 Art. no. jet black RAL 9005	JP kom. PU pcs.
PG 16	2 x	4,0	10,0	27,0	40,0	5315850	5315650	50
PG 16	2 x	5,0	10,0	27,0	40,0	5315851	5315651	50
PG 16	2 x	6,0	10,0	33,0	42,0	5315852	5315652	50
PG 16	2 x	7,0	10,0	27,0	40,0	5315160	5315515	50
PG 16	2 x	8,0	10,0	33,0	42,0	5315853	5315653	50
PG 16	2 x	9,0	10,0	27,0	40,0	5315854	5315654	50
PG 16	3 x	3,0	10,0	27,0	40,0	5315855	5315655	50
PG 16	3 x	4,0	10,0	27,0	40,0	5315856	5315656	50
PG 16	3 x	5,0	10,0	27,0	40,0	5315857	5315516	50
PG 16	3 x	5,6	10,0	27,0	40,0	5315858	5315658	50
PG 16	3 x	6,0	10,0	33,0	42,0	5315859	5315659	50
PG 16	3 x	7,0	10,0	27,0	40,0	5315860	5315660	50
PG 16	3 x	8,0	10,0	33,0	42,0	5315861	5315661	50
PG 16	4 x	4,0	10,0	27,0	40,0	5315862	5315662	50
PG 16	4 x	5,0	10,0	33,0	42,0	5315863	5315663	50
PG 16	4 x	6,0	10,0	33,0	40,0	5315864	5315664	50
PG 16	5 x	4,0	10,0	33,0	42,0	5315865	5315665	50
PG 16	5 x	5,0	10,0	27,0	40,0	5315866	5315666	50
PG 16	6 x	4,0	10,0	27,0	40,0	5315867	5315667	50
PG 16	7 x	4,0	10,0	27,0	40,0	5315868	5315668	50
PG 21	2 x	4,5	11,0	33,0	44,0	5315869	5315669	20
PG 21	2 x	8,0	11,0	42,0	48,0	5315870	5315670	20
PG 21	2 x	8,7	11,0	33,0	44,0	5315871	5315671	20
PG 21	2 x	9,0	11,0	42,0	44,0	5315872	5315672	20
PG 21	2 x	11,0	11,0	42,0	48,0	5315873	5315673	20
PG 21	3 x	7,0	11,0	33,0	44,0	5315210	5315520	20
PG 21	3 x	8,0	11,0	42,0	48,0	5315211	5315521	20
PG 21	3 x	9,0	11,0	42,0	48,0	5315874	5315674	20
PG 21	4 x	5,0	11,0	42,0	48,0	5315875	5315675	20
PG 21	4 x	6,0	11,0	33,0	44,0	5315212	5315522	20
PG 21	4 x	7,5	11,0	42,0	48,0	5315876	5315676	20
PG 21	4 x	8,0	11,0	42,0	48,0	5315213	5315523	20
PG 21	5 x	5,0	11,0	33,0	44,0	5315877	5315677	20
PG 21	5 x	6,0	11,0	42,0	48,0	5315214	5315524	20
PG 21	5 x	6,5	11,0	42,0	48,0	5315215	5315525	20
PG 21	6 x	4,0	11,0	33,0	44,0	5315878	5315678	20
PG 21	6 x	5,0	11,0	42,0	48,0	5315879	5315679	20
PG 21	6 x	6,0	11,0	42,0	48,0	5315216	5315526	20
PG 21	6 x	6,5	11,0	42,0	48,0	5315217	5315527	20
PG 21	6 x	7,0	11,0	33,0	44,0	5315218	5315528	20
PG 21	7 x	6,0	11,0	33,0	44,0	5315219	5315529	20
PG 21	8 x	4,0	11,0	33,0	44,0	5315880	5315683	20
PG 21	8 x	5,0	11,0	33,0	44,0	5315220	5315530	20
PG 21	11 x	5,0	11,0	33,0	44,0	5315221	5315531	20
PG 21	21 x	2,0	11,0	42,0	48,0	5315881	5315684	20
PG 21	28 x	3,0	11,0	33,0	44,0	5315222	5315532	20
PG 29	2 x	9,0	12,0	42,0	48,0	5315289	5315690	20
PG 29	2 x	11,0	12,0	42,0	48,0	5315891	5315691	20
PG 29	2 x	12,0	12,0	42,0	48,0	5315892	5315692	20
PG 29	3 x	9,0	12,0	42,0	48,0	5315893	5315693	20
PG 29	3 x	11,0	12,0	42,0	48,0	5315894	5315694	20
PG 29	4 x	8,0	12,0	42,0	48,0	5315290	5315540	20
PG 29	4 x	9,0	12,0	42,0	48,0	5315895	5315695	20
PG 29	4 x	10,0	12,0	42,0	48,0	5315896	5315696	20
PG 29	6 x	6,0	12,0	42,0	48,0	5315897	5315697	20
PG 29	6 x	6,5	12,0	42,0	48,0	5315292	5315542	20
PG 29	6 x	7,0	12,0	42,0	48,0	5315293	5315543	20
PG 29	7 x	6,0	12,0	42,0	48,0	5315294	5315544	20
PG 29	7 x	7,0	12,0	42,0	48,0	5315898	5315698	20
PG 29	8 x	5,0	12,0	42,0	48,0	5315899	5315699	20
PG 29	8 x	6,0	12,0	42,0	48,0	5315295	5315545	20
PG 29	10 x	6,0	12,0	42,0	48,0	5315900	5315700	20
PG 29	11 x	5,0	12,0	42,0	48,0	5315296	5315546	20
PG 29	28 x	3,0	12,0	42,0	48,0	5315297	5315547	20

Uvodnica kabelska WADI-TEC Duplo

Poliamid
brtva sa više otvora
metrički navoj, kratki

Cable gland WADI-TEC Duplo

Polyamide
multi-holed sealing
metric thread, short

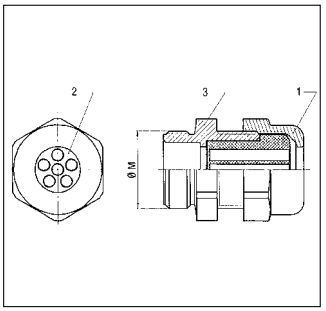

RoHS | IP 68 | EN 50262

Materijal:
- 1/3: tijelo kabelske uvodnice/ glava: poliamid 6, ojačano s 25% staklenih vlakana
- 2: brtva: tefabloc

Radna temperatura:
-30°C do 120°C

Boje/izvedbe:
- svjetlosiva, srebrnosiva, crna
- vanjski navoj: metrički
- kratki navoj
- duga brtva sa više otvora
- brtvljenje otvora
- bez potrebe za čepovima otvora brtve

Svojstva:
- nepropusnost za vodu i plinove
- potpuno zaštićeno od okretanja
- može se kombinirati s raznim brtvenim umecima

Pribor (vidi poglavlje…):
- Matice (3.3)
- Montažni alat Mon.Za (3.1)

Upotreba:
- strojevi i uređaji
- fotonaponski sustavi
- tehnologija automatizacije
- tehnologija mjernih i kontrolnih instrumenata

Material:
- 1/3: Gland element/Cap nut: Polyamide 6, 25 % glassfiber reinforced
- 2: Sealing: Tefabloc

Temperature range:
-30°C to 120°C

Colour(s)/Designs:
- light grey, silver grey, jet black
- External thread: metric
- short thread
- long multi-holed sealing
- Blind hole sealing
- No blind pin required

Characteristics:
- gas and water-tight
- completely twist protected
- combinable with various sealing inserts

Accessories (see chapter…):
- lock nuts (3.3)
- Mounting tool Mon.Za (3.1)

Applications:
- Machine and apparatus construction
- Photovoltaic
- Automation technology
- measuring and control engineering

vanjski navoj External thread	broj otvora Quantity	promjer otvora mm Hole diameter mm	duljina navoja (E) mm Thread length (E) mm	SW (L) mm SW mm	ukupna duljina mm Complete length (L) mm	broj artikla svjetlosiva RAL 7035 Art. no. light grey RAL 7035	broj artikla crna RAL 9005 Art. no. jet black RAL 9005	JP kom. PU pcs.
M 16 x 1,5	2 x	1,0	8,0	19,0	32,0	5316100	5318100	50
M 16 x 1,5	2 x	3,0	8,0	19,0	32,0	5316101	5318101	50
M 16 x 1,5	2 x	3,5	8,0	19,0	32,0	5316102	5318102	50
M 16 x 1,5	2 x	4,0	8,0	19,0	32,0	5316103	5318103	50
M 16 x 1,5	3 x	3,0	8,0	19,0	32,0	5316104	5318104	50
M 20 x 1,5	2 x	3,0	9,0	24,0	36,0	5316200	5318200	50
M 20 x 1,5	2 x	4,0	9,0	27,0	39,0	5316201	5318201	50
M 20 x 1,5	2 x	5,0	9,0	27,0	39,0	5316202	5318202	50
M 20 x 1,5	2 x	6,0	9,0	27,0	39,0	5316203	5318203	50
M 20 x 1,5	2 x	7,0	9,0	27,0	39,0	5316204	5318204	50
M 20 x 1,5	3 x	2,0	9,0	24,0	36,0	5316205	5318205	50
M 20 x 1,5	3 x	3,0	9,0	27,0	39,0	5316206	5318206	50
M 20 x 1,5	3 x	4,0	9,0	27,0	39,0	5316207	5318207	50
M 20 x 1,5	3 x	5,0	9,0	27,0	39,0	5316208	5318208	50
M 20 x 1,5	3 x	5,6	9,0	27,0	39,0	5316209	5318209	50
M 20 x 1,5	3 x	6,0	9,0	27,0	39,0	5316210	5318210	50
M 20 x 1,5	4 x	3,0	9,0	24,0	36,0	5316211	5318211	50
M 20 x 1,5	4 x	4,0	9,0	27,0	39,0	5316212	5318212	50
M 20 x 1,5	5 x	4,0	9,0	27,0	39,0	5316213	5318213	50
M 20 x 1,5	5 x	5,0	9,0	27,0	39,0	5316214	5318214	50
M 20 x 1,5	6 x	3,5	9,0	24,0	36,0	5316215	5318215	50
M 20 x 1,5	6 x	4,0	9,0	27,0	39,0	5316216	5318216	50
M 20 x 1,5	10 x	2,0	9,0	24,0	36,0	5316217	5318217	50
M 25 x 1,5	2 x	4,5	11,0	33,0	44,0	5316300	5318300	20
M 25 x 1,5	2 x	8,0	11,0	33,0	44,0	5316301	5318301	20
M 25 x 1,5	3 x	7,0	11,0	33,0	44,0	5316302	5318302	20
M 25 x 1,5	3 x	8,0	11,0	33,0	44,0	5316303	5318303	20
M 25 x 1,5	4 x	5,0	11,0	33,0	44,0	5316304	5318304	20
M 25 x 1,5	4 x	6,0	11,0	33,0	44,0	5316305	5318305	20
M 25 x 1,5	5 x	5,0	11,0	33,0	44,0	5316306	5318306	20
M 25 x 1,5	5 x	6,0	11,0	33,0	44,0	5316307	5318307	20
M 25 x 1,5	5 x	6,5	11,0	33,0	44,0	5316308	5318308	20
M 25 x 1,5	6 x	4,0	11,0	33,0	44,0	5316309	5318309	20
M 25 x 1,5	6 x	5,0	11,0	33,0	44,0	5316310	5318310	20
M 25 x 1,5	8 x	4,0	11,0	33,0	44,0	5316311	5318311	20
M 25 x 1,5	8 x	5,0	11,0	33,0	44,0	5316312	5318312	20
M 25 x 1,5	21 x	2,0	11,0	33,0	44,0	5316313	5318313	20
M 32 x 1,5	2 x	9,0	12,0	42,0	55,0	5316400	5318400	20
M 32 x 1,5	2 x	11,0	12,0	42,0	55,0	5316401	5318401	20

vanjski navoj External thread	broj otvora Quantity	promjer otvora mm Hole diameter mm	duljina navoja (E) mm Thread length (E) mm	SW (L) mm SW mm	ukupna duljina mm Complete length (L) mm	broj artikla svjetlosiva RAL 7035 Art. no. light grey RAL 7035	broj artikla crna RAL 9005 Art. no. jet black RAL 9005	JP kom. PU pcs.
M 32 x 1,5	2 x	12,0	12,0	42,0	55,0	5316402	5318402	20
M 32 x 1,5	3 x	9,0	12,0	42,0	55,0	5316403	5318403	20
M 32 x 1,5	3 x	11,0	12,0	42,0	55,0	5316404	5318404	20
M 32 x 1,5	4 x	8,0	12,0	42,0	55,0	5316405	5318405	20
M 32 x 1,5	4 x	9,0	12,0	42,0	55,0	5316406	5318406	20
M 32 x 1,5	4 x	10,0	12,0	42,0	55,0	5316407	5318407	20
M 32 x 1,5	6 x	6,0	12,0	42,0	55,0	5316408	5318408	20
M 32 x 1,5	6 x	6,5	12,0	42,0	55,0	5316409	5318409	20
M 32 x 1,5	6 x	7,0	12,0	42,0	55,0	5316410	5318410	20
M 32 x 1,5	7 x	6,0	12,0	42,0	55,0	5316411	5318411	20
M 32 x 1,5	7 x	7,0	12,0	42,0	55,0	5316412	5318412	20
M 32 x 1,5	8 x	5,0	12,0	42,0	55,0	5316413	5318413	20
M 32 x 1,5	8 x	6,0	12,0	42,0	55,0	5316414	5318414	20
M 32 x 1,5	10 x	6,0	12,0	42,0	55,0	5316415	5318415	20
M 32 x 1,5	11 x	5,0	12,0	42,0	55,0	5316416	5318416	20
M 32 x 1,5	28 x	3,0	12,0	42,0	55,0	5316417	5318417	20

Uvodnica kabelska WADI-TEC

PVDF
ECA-stezni prsten/
duga brtva
metrički navoj, dugi

Cable gland WADI-TEC

PVDF
ECA-Clamping-Ring/
long sealing
metric thread, long

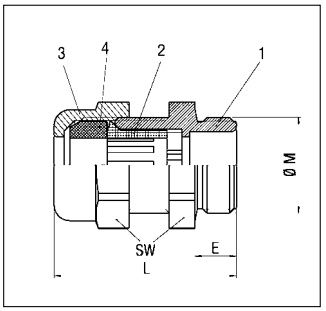

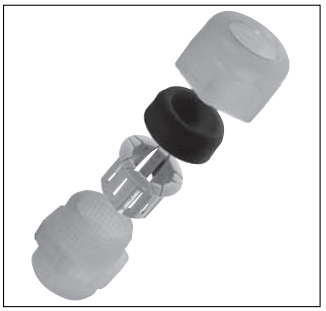

RoHS | IP 68 | EN 50262

Materijal:
- 1/3: tijelo kabelske uvodnice/ glava: polivinildenfluorid
- 2: ECA-stezni prsten: polikarbonat
- 4: kratka brtva: santopren duga brtva: nitril

Radna temperatura:
ECA: -40°C do 120°C
duga brtva: -25°C do 120°C

Boje/izvedbe:
- vanjski navoj: metrički
- dugi navoj
- ECA-stezni prsten
- duga brtva, 2-djelna

Svojstva:
- bez halogena
- zaštita od izvlačenja pomoću ECA-steznog prstena
- nepropusnost za vodu i plinove
- potpuno zaštićeno od okretanja
- može se kombinirati s raznim brtvenim umecima
- UV otpornost

Pribor (vidi poglavlje…):
- Matice (3.3)
- Montažni alat Mon.Za (3.1)

Upotreba:
- izrada strojeva i aparata
- tehnologija mjernih i kontrolnih instrumenata
- instalacije u proizvodnim postrojenjima
- prehrambena industrija
- tehnologija čistih soba
- proizvodnja mlijeka/sireva

Material:
- 1/3: Gland element/Cap nut: Polyvinylidenefluoride
- 2: ECA-Clamping-Ring: Polycarbonate
- 4: short Sealing: Santoprene long Sealing: Nitrile

Temperature range:
ECA: -40°C to 120°C
long Sealing: -25°C to 120°C

Colour(s)/Designs:
- External thread: metric
- long thread
- ECA-Clamping-Ring
- long Sealing, two parts

Characteristics:
- free of halogen
- strain relief through ECA-Clamping-Ring
- gas and water-tight
- completely twist protected
- combinable with various sealing inserts
- UV resistance

Accessories (see chapter…):
- lock nuts (3.3)
- Mounting tool Mon.Za (3.1)

Applications:
- Machine and apparatus construction
- Measuring and control engineering
- Plant installations
- Food Industries
- Cleanroom technology
- Dairies

	ECA ECA		duga brtva, 2-djelna long Sealing, two parts					
vanjski navoj External thread	za kabel promjera mm Clamping range mm	broj artikla PVDF Art. no. PVDF	za kabel promjera mm Clamping range mm	broj artikla PVDF Art. no. PVDF	duljina navoja (E) mm Thread length (E) mm	SW mm SW mm	ukupna duljina (L) mm Complete length (L) mm	JP kom. PU pcs.
M 12 x 1,5	3,0 - 6,0	5330012 *	-	-	15,0	15,0	38,0	50
M 16 x 1,5	5,0 - 8,0	5330016 *	3,0 - 8,0	5330216 *	15,0	19,0	39,0	50
M 20 x 1,5/13	8,0 - 12,0	5330020 *	6,0 - 12,5	5330220 *	15,0	24,0	42,0	50
M 20 x 1,5/16	10,0 - 14,0	5330021 *	7,0 - 14,5	5330221 *	15,0	33,0	45,0	20
M 25 x 1,5	11,5 - 18,0	5330025 *	10,0 - 18,0	5330225 *	15,0	33,0	48,0	20
M 32 x 1,5	15,0 - 24,0	5330032 *	14,0 - 24,0	5330232 *	15,0	42,0	58,0	20

*** u postupku izlaska iz proizvodnje** / * Phase-out type

Uvodnica kabelska WADI-TEC

mesing niklani
ECA-stezni prsten
PG-navoj

Cable gland WADI-TEC

nickel-plated brass
ECA-Clamping-Ring
PG-thread

RoHS | IP 68

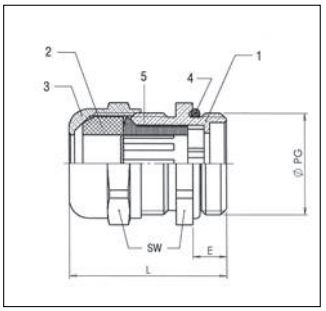

Materijal:
- 1/3: tijelo kabelske uvodnice/ glava: mesing niklani
- 2: brtva: tefabloc
- 4: brtva za vanjski navoj: nitril
- 5: ECA-stezni prsten:
  PG 7-29: polikarbonat (PC)
  PG 36-48: ∗ polioksimetilen (POM)

Radna temperatura:
PC: -25°C do 120°C
∗POM: -30°C do 95°C

Boje/izvedbe:
- vanjski navoj: PG
- kratki/dugi navoj
- ECA-stezni prsten

Svojstva:
- zaštita od izvlačenja pomoću steznog prstena
- nepropusnost za vodu i plinove
- potpuno zaštićeno od okretanja
- može se kombinirati s raznim brtvenim umecima

Pribor (vidi poglavlje…):
- Matice (3.3)
- Montažni alat Mon.Za (3.1)

Upotreba:
- izrada strojeva i aparata
- tehnologija mjernih i kontrolnih instrumenata
- instalacije u proizvodnim postrojenjima
- kemijska industrija

Material:
- 1/3: Gland element/Cap nut: nickel-plated brass
- 2: Sealing: Tefabloc
- 4: Sealing for external thread: Nitrile
- 5: ECA-Clamping-Ring
  PG 7-29: Polycarbonate (PC)
  PG 36-48: ∗ Polyoxymethylene (POM)

Temperature range:
PC: -25°C to 120°C
∗POM: -30°C to 95°C

Colour(s)/Designs:
- External thread: PG
- short/long thread
- ECA-Clamping-Ring

Characteristics:
- strain relief through clamping ring
- gas and water-tight
- completely twist protected
- combinable with various sealing inserts

Accessories (see chapter…):
- lock nuts (3.3)
- Mounting tool Mon.Za (3.1)

Applications:
- Machines and apparatus construction
- Measuring and control engineering
- Plant installations
- Chemical industry

vanjski navoj External thread	za kabel promjera mm Clamping range mm	duljina navoja (E) mm Thread length (E) mm	SW mm SW mm	ukupna duljina (L) mm Complete length (L) mm	broj artikla niklani Art. no. nickel-plated	JP kom. PU pcs.
kratki navoj / short thread						
PG 7	3,0 - 6,0	5,0	14,0	24,0	4221079	50
PG 9	5,0 - 8,0	6,0	17,0	25,0	4221095	50
PG 11	6,0 - 10,0	6,0	20,0	26,0	4221117	50
PG 13,5	8,0 - 12,0	6,5	22,0	28,0	4221133	50
PG 16	9,5 - 14,0	6,5	24,0	30,0	4221168	50
PG 21	11,5 - 18,0	7,0	30,0	35,0	4221214	20
PG 29	15,0 - 24,0	8,0	40,0	43,0	4221290	20
PG 36∗	23,0 - 30,0	9,0	50,0	50,0	4221362	10
PG 42∗	26,0 - 35,0	10,0	58,0	57,0	4221427	5
PG 48∗	35,0 - 40,0	10,0	64,0	59,0	4221486	5
dugi navoj / long thread						
PG 7	3,0 - 6,0	15,0	14,0	34,0	4221507	50
PG 9	5,0 - 8,0	15,0	17,0	34,0	4221509	50
PG 11	6,0 - 10,0	15,0	20,0	35,0	4221511	50
PG 13,5	8,0 - 12,0	15,0	22,0	36,5	4221513	50
PG 16	9,5 - 14,0	15,0	24,0	38,5	4221516	50
PG 21	11,5 - 18,0	15,0	30,0	43,0	4221521	20
PG 29	15,0 - 24,0	15,0	40,0	50,0	4221529	20
PG 36∗	23,0 - 30,0	18,0	50,0	59,0	4221536	10
PG 42∗	26,0 - 35,0	18,0	58,0	65,0	4221542	5
PG 48∗	35,0 - 40,0	18,0	64,0	67,0	4221548	5

Uvodnica kabelska WADI-TEC

mesing niklani
ECA-stezni prsten
metrički navoj

Cable gland WADI-TEC

nickel-plated brass
ECA-Clamping-Ring
metric thread

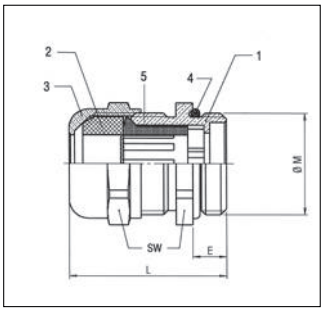

RoHS | IP 68 | EN 50262

Materijal:
- 1/3: tijelo kabelske uvodnice/ glava: mesing niklani
- 2: brtva: tefabloc
- 4: brtva za vanjski navoj: nitril
- 5: ECA-stezni prsten:
  PG 7-29: polikarbonat (PC)
  PG 36-48: ∗ polioksimetilen (POM)

Radna temperatura:
PC: -25°C do 120°C
∗POM: -30°C do 95°C

Boje/izvedbe:
- vanjski navoj: metrički
- ECA-stezni prsten
- kratki/dugi navoj

Svojstva:
- zaštita od izvlačenja pomoću steznog prstena
- nepropusnost za vodu i plinove
- potpuno zaštićeno od okretanja
- može se kombinirati s raznim brtvenim umecima

Pribor (vidi poglavlje…):
- Matice (3.3)
- Montažni alat Mon.Za (3.1)

Upotreba:
- izrada strojeva i aparata
- tehnologija mjernih i kontrolnih instrumenata
- instalacije u proizvodnim postrojenjima
- kemijska industrija

Material:
- 1/3: Gland element/Cap nut: nickel-plated brass
- 2: Sealing: Tefabloc
- 4: Sealing for external thread: Nitrile
- 5: ECA-Clamping-Ring
  PG 7-29: Polycarbonate (PC)
  PG 36-48: ∗ Polyoxymethylene (POM)

Temperature range:
PC: -25°C to 120°C
∗POM: -30°C to 95°C

Colour(s)/Designs:
- External thread: metric
- ECA-Clamping-Ring
- short/long thread

Characteristics:
- strain relief through clamping ring
- gas and water-tight
- completely twist protected
- combinable with various sealing inserts

Accessories (see chapter…):
- lock nuts (3.3)
- Mounting tool Mon.Za (3.1)

Applications:
- Machines and apparatus construction
- Measuring and control engineering
- Plant installations
- Chemical industry

vanjski navoj External thread	za kabel promjera mm Clamping range mm	duljina navoja (E) mm Thread length (E) mm	SW 1 mm SW 1 mm	SW 2 mm SW 2 mm	ukupna duljina (L) mm Complete length (L) mm	broj artikla niklani Art. no. nickel-plated	JP kom. PU
kratki navoj / short thread							
M 12 x 1,5	3,0 - 6,0	7,0	14,0	14,0	27,0	4221714	50
M 16x1,5/7	3,0 - 6,0	7,0	14,0	17,0	27,0	4221716	50
M 16x1,5/9	5,0 - 8,0	7,0	17,0	17,0	27,0	4221717	50
M 20x1,5/11	6,0 - 10,0	7,0	20,0	22,0	28,0	4221720	50
M 20x1,5/13	8,0 - 12,0	7,0	22,0	22,0	29,0	4221721	50
M 25x1,5/16	9,5 - 14,0	8,0	24,0	26,0	31,0	4221725	20
M 25x1,5/21	11,5 - 18,0	8,0	30,0	30,0	37,0	4221726	20
M 32x1,5/21	11,5 - 18,0	8,5	30,0	33,0	38,0	4221732	10
M 32x1,5/29	15,0 - 24,0	8,5	40,0	40,0	45,0	4221733	10
M 40 x 1,5	15,0 - 24,0	8,5	40,0	42,0	45,0	4221740	5
M 50 x 1,5∗	23,0 - 30,0	9,5	50,0	55,0	51,0	4221750	5
M 63 x 1,5∗	26,0 - 35,0	10,5	58,0	70,0	58,0	4221760	5
dugi navoj / long thread							
M 12 x 1,5	3,0 - 6,0	13,0	14,0	14,0	33,0	4221712	50
M 16x1,5/7	3,0 - 6,0	13,0	14,0	17,0	33,0	4221718	50
M 16x1,5/9	5,0 - 8,0	13,0	17,0	17,0	33,0	4221719	50
M 20x1,5/11	6,0 - 10,0	13,0	20,0	22,0	34,0	4221722	50
M 20x1,5/13	8,0 - 12,0	13,0	22,0	22,0	35,0	4221723	50
M 25x1,5/16	9,5 - 14,0	14,0	24,0	26,0	37,0	4221727	20
M 25x1,5/21	11,5 - 18,0	14,0	30,0	30,0	43,0	4221728	20
M 32x1,5/21	11,5 - 18,0	14,5	30,0	33,0	44,0	4221734	20
M 32x1,5/29	15,0 - 24,0	14,5	40,0	40,0	51,0	4221735	10
M 40 x 1,5	15,0 - 24,0	14,5	40,0	42,0	51,0	4221741	5
M 50 x 1,5∗	23,0 - 30,0	15,5	50,0	55,0	57,0	4221751	5
M 63 x 1,5∗	26,0 - 35,0	16,5	58,0	70,0	64,0	4221761	5

Uvodnica kabelska WADI-TEC

mesing niklani
za plosnati kabel
PG-navoj

Cable gland WADI-TEC

nickel-plated brass
flat cable sealing
PG-thread

RoHS | IP 68

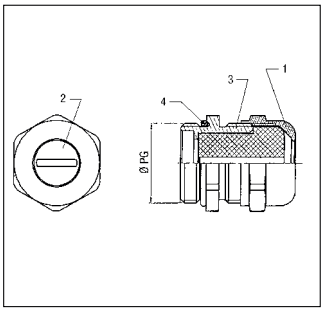

Materijal:
- 1/3: tijelo kabelske uvodnice/ glava: mesing niklani
- 2: brtva: tefabloc
- 4: brtva za vanjski navoj: nitril

Radna temperatura:
-25°C do 120°C

Boje/izvedbe:
- vanjski navoj: PG
- kratki/dugi navoj
- duga brtva za plosnati kabel zaobljeni, pravokutni, ovalni

Svojstva:
- nepropusnost za vodu i plinove
- potpuno zaštićeno od okretanja
- može se kombinirati s raznim brtvenim umecima

Pribor (vidi poglavlje…):
- Matice (3.3)
- Montažni alat Mon.Za (3.1)

Upotreba:
- izrada strojeva i aparata
- tehnologija mjernih i kontrolnih instrumenata
- instalacije u proizvodnim postrojenjima
- kemijska industrija

Material:
- 1/3: Gland element/Cap nut: nickel-plated brass
- 2: Sealing: Tefabloc
- 4: Sealing for External thread: Nitrile

Temperature range:
-25°C to 120°C

Colour(s)/Designs:
- External thread: PG
- short/long thread
- long sealing for flat cables round, angular, oval

Characteristics:
- gas and water-tight
- completely twist protected
- combinable with various sealing inserts

Accessories (see chapter…):
- lock nuts (3.3)
- Mounting tool Mon.Za (3.1)

Applications:
- Machines and apparatus construction
- Measuring and control engineering
- Plant installations
- Chemical industry

	plosnati kabel zaobljeni Flat cable, round		plosnati kabel pravokutni Flat cable, angular		plosnati kabel ovalni Flat cable, oval		
vanjski navoj External thread	za kabel promjera mm Clamping range mm	broj artikla niklani Art. no. nickel-plated	za kabel promjera mm Clamping range mm	broj artikla niklani Art. no. nickel-plated	za kabel promjera mm Clamping range mm	broj artikla niklani Art. no. nickel-plated	JP kom. PU pcs.
kratki navoj / short thread							
PG 9	3,5 x 5,5	4224300					50
PG 11	2,8 x 10,5	4224305					50
PG 11	3,5 x 9,0	4224306					50
PG 11	4,0 x 6,0	4224307					50
PG 13,5	3,0 x 12,0	4224310			5,0 x 8,0	4224375	50
PG 13,5	5,0 x 11,0	4224311			5,0 x 12,0	4224376	50
PG 16	5,0 x 12,0	4224315	8,0 x 12,0	4224351	5,0 x 12,0	4224390	25
PG 16	7,5 x 14,0	4224317			5,5 x 8,5	4224380	25
PG 16					6,0 x 10,0	4224382	25
PG 16					7,0 x 14,0	4224384	25
PG 16/21	5,0 x 16,0	4224316			5,0 x 15,0	4224381	20
PG 16/21					6,0 x 15,0	4224383	20
PG 21	5,0 x 17,0	4224320	4,0 x 15,0	4224355	5,0 x 16,0	4224385	20
PG 21	7,0 x 18,0	4224321			7,0 x 16,5	4224386	20
PG 21	9,0 x 15,0	4224322					20
PG 21/29					7,0 x 20,0	4224387	10
PG 29	8,0 x 25,0	4224326					10
PG 29	10,0 x 25,0	4224327					10
dugi navoj / long thread							
PG 9	3,5 x 5,5	4224450					50
PG 11	2,8 x 10,5	4224455					50
PG 11	3,5 x 9,0	4224456					50
PG 11	4,0 x 6,0	4224457					50
PG 13,5	3,0 x 12,0	4224460			5,0 x 8,0	4224575	50
PG 13,5	5,0 x 11,0	4224461			5,0 x 12,0	4224576	50
PG 16	5,0 x 12,0	4224465	8,0 x 12,0	4224551	5,0 x 12,0	4224590	25
PG 16	7,5 x 14,0	4224467			5,5 x 8,5	4224580	25
PG 16					6,0 x 10,0	4224582	25
PG 16					7,0 x 14,0	4224584	25
PG 16/21	5,0 x 16,0	4224466			5,0 x 15,0	4224581	20
PG 16/21					6,0 x 15,0	4224583	20
PG 21	5,0 x 17,0	4224480	4,0 x 15,0	4224555	5,0 x 16,0	4224585	20
PG 21	7,0 x 18,0	4224481			7,0 x 16,5	4224586	20
PG 21	9,0 x 15,0	4224482					20
PG 21/29					7,0 x 20,0	4224587	10
PG 29	8,0 x 25,0	4224506					10
PG 29	10,0 x 25,0	4224507					10

Uvodnica kabelska WADI-TEC

mesing niklani
za plosnati kabel
metrički navoj

Cable gland WADI-TEC

nickel-plated brass
flat cable sealing
metric thread

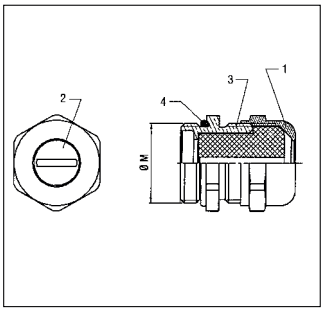

RoHS | IP 68 | EN 50262

Materijal:
- 1/3: tijelo kabelske uvodnice/ glava: mesing niklani
- 2: brtva: tefabloc
- 4: brtva za vanjski navoj: nitril

Radna temperatura:
-25°C do 120°C

Boje/izvedbe:
- vanjski navoj: metrički
- kratki/dugi navoj
- duga brtva za plosnati kabel zaobljeni, pravokutni, ovalni

Svojstva:
- nepropusnost za vodu i plinove
- potpuno zaštićeno od okretanja
- može se kombinirati s raznim brtvenim umecima

Pribor (vidi poglavlje…):
- Matice (3.3)
- Montažni alat Mon.Za (3.1)

Upotreba:
- izrada strojeva i aparata
- tehnologija mjernih i kontrolnih instrumenata
- instalacije u proizvodnim postrojenjima
- kemijska industrija

Material:
- 1/3: Gland element/Cap nut: nickel-plated brass
- 2: Sealing: Tefabloc
- 4: Sealing for External thread: Nitrile

Temperature range:
-25°C to 120°C

Colour(s)/Designs:
- External thread: metric
- short/long thread
- long sealing for flat cables round, angular, oval

Characteristics:
- gas and water-tight
- completely twist protected
- combinable with various sealing inserts

Accessories (see chapter…):
- lock nuts (3.3)
- Mounting tool Mon.Za (3.1)

Applications:
- Machines and apparatus construction
- Measuring and control engineering
- Plant installations
- Chemical industry

	plosnati kabel zaobljeni Flat cable, round		plosnati kabel pravokutni Flat cable, angular		plosnati kabel ovalni Flat cable, oval		
vanjski navoj External thread	za kabel promjera mm Clamping range mm	broj artikla niklani Art. no. nickel-plated	za kabel promjera mm Clamping range mm	broj artikla niklani Art. no. nickel-plated	za kabel promjera mm Clamping range mm	broj artikla niklani Art. no. nickel-plated	JP kom. PU pcs.
kratki navoj / short thread							
M 16 x 1,5/9	3,5 x 5,5	4224700					50
M 20 x 1,5/11	2,8 x 10,5	4224705					50
M 20 x 1,5/11	3,5 x 9,0	4224706					50
M 20 x 1,5/11	4,0 x 6,0	4224707					50
M 20 x 1,5/13	3,0 x 12,0	4224710			5,0 x 8,0	4224775	50
M 20 x 1,5/13	5,0 x 11,0	4224711			5,0 x 12,0	4224776	50
M 25 x 1,5/16	5,0 x 12,0	4224715	8,0 x 12,0	4224751	5,0 x 12,0	4224790	20
M 25 x 1,5/16	7,5 x 14,0	4224717			5,5 x 8,5	4224780	20
M 25 x 1,5/16					6,0 x 10,0	4224781	20
M 25 x 1,5/16					7,0 x 14,0	4224782	20
M 25 x 1,5/21	5,0 x 16,0	4224716	4,0 x 15,0	4224755	5,0 x 15,0	4224784	20
M 25 x 1,5/21	5,0 x 17,0	4224720			5,0 x 16,0	4224785	20
M 25 x 1,5/21	7,0 x 18,0	4224721			6,0 x 15,0	4224783	20
M 25 x 1,5/21	9,0 x 15,0	4224722			7,0 x 16,5	4224786	20
M 32 x 1,5/29	8,0 x 25,0	4224726			7,0 x 20,0	4224787	10
M 32 x 1,5/29	10,0 x 25,0	4224727					10
dugi navoj / long thread							
M 16 x 1,5/9	3,5 x 5,5	4224600					50
M 20 x 1,5/11	2,8 x 10,5	4224605					50
M 20 x 1,5/11	3,5 x 9,0	4224606					50
M 20 x 1,5/11	4,0 x 6,0	4224607					50
M 20 x 1,5/13	3,0 x 12,0	4224610			5,0 x 8,0	4224675	50
M 20 x 1,5/13	5,0 x 11,0	4224611			5,0 x 12,0	4224676	50
M 25 x 1,5/16	5,0 x 12,0	4224615	8,0 x 12,0	4224651	5,0 x 12,0	4224690	20
M 25 x 1,5/16	7,5 x 14,0	4224617			5,5 x 8,5	4224680	20
M 25 x 1,5/16					6,0 x 10,0	4224681	20
M 25 x 1,5/16					7,0 x 14,0	4224682	20
M 25 x 1,5/21	5,0 x 16,0	4224616	4,0 x 15,0	4224655	5,0 x 15,0	4224684	20
M 25 x 1,5/21	5,0 x 17,0	4224620			5,0 x 16,0	4224685	20
M 25 x 1,5/21	7,0 x 18,0	4224621			6,0 x 15,0	4224683	20
M 25 x 1,5/21	9,0 x 15,0	4224622			7,0 x 16,5	4224686	20
M 32 x 1,5/29	8,0 x 25,0	4224626			7,0 x 20,0	4224687	10
M 32 x 1,5/29	10,0 x 25,0	4224627					10

Uvodnica kabelska WADI-TEC Duplo

mesing niklani
brtva sa više otvora
PG-navoj, kratki

Cable gland WADI-TEC Duplo

nickel-plated brass
multi-holed sealing
PG-thread, short

RoHS | IP 68

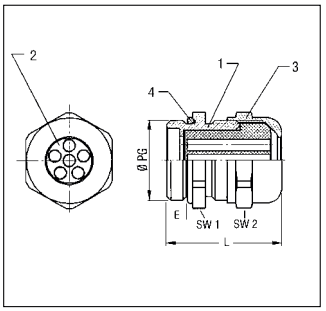

Materijal:
- 1/3: tijelo kabelske uvodnice/ glava: mesing niklani
- 2: brtva: tefabloc
- 4: brtva za vanjski navoj: nitril

Radna temperatura:
-25°C do 120°C

Boje/izvedbe:
- vanjski navoj: PG
- kratki navoj
- duga brtva sa više otvora
- brtvljenje otvora
- bez potrebe za čepovima otvora brtve

Svojstva:
- nepropusnost za vodu i plinove
- potpuno zaštićeno od okretanja
- može se kombinirati s raznim brtvenim umecima

Pribor (vidi poglavlje…):
- Matice (3.3)
- Montažni alat Mon.Za (3.1)

Upotreba:
- izrada strojeva i aparata
- tehnologija mjernih i kontrolnih instrumenata
- instalacije u proizvodnim postrojenjima
- kemijska industrija

Material:
- 1/3: Gland element/Cap nut: nickel-plated brass
- 2: Sealing: Tefabloc
- 4: Sealing for External thread: Nitrile

Temperature range:
-25°C to 120°C

Colour(s)/Designs:
- External thread: PG
- short thread
- long multi-holed sealing
- Blind hole sealing
- No blind pin required

Characteristics:
- gas and water-tight
- completely twist protected
- combinable with various sealing inserts

Accessories (see chapter…):
- lock nuts (3.3)
- Mounting tool Mon.Za (3.1)

Applications:
- Machines and apparatus construction
- Measuring and control engineering
- Plant installations
- Chemical industry

vanjski navoj External thread	broj otvora Quantity	promjer otvora mm Hole diameter mm	duljina navoja (E) mm Thread length (E) mm	SW 1/2 mm SW 1/2 mm	ukupna duljina (L) mm Complete length (L) mm	broj artikla niklani Art. no. nickel-plated	JP kom. PU pcs.
PG 7	1 x	4,0	5,0	14,0	24,0	4248640	50
PG 7	1 x	5,0	5,0	14,0	24,0	4248641	50
PG 9	1 x	5,0	6,0	17,0	25,0	4248642	50
PG 9	2 x	1,0	6,0	17,0	25,0	4248643	50
PG 9	2 x	3,0	6,0	17,0	25,0	4248644	50
PG 9	2 x	3,5	6,0	17,0	25,0	4248645	50
PG 9	2 x	4,0	6,0	17,0	25,0	4248646	50
PG 9	3 x	3,0	6,0	17,0	25,0	4248647	50
PG 9	4 x	3,0	6,0	20,0	26,0	4248648	50
PG 9	4 x	4,0	6,0	20,0	26,0	4248649	50
PG 11	2 x	2,3	6,0	20,0	26,0	4248650	50
PG 11	2 x	3,0	6,0	20,0	26,0	4248651	50
PG 11	2 x	3,5	6,0	20,0	26,0	4248405	50
PG 11	2 x	4,0	6,0	20,0	26,0	4248652	50
PG 11	2 x	5,0	6,0	20,0	26,0	4248660	50
PG 11	2 x	6,0	6,5	24,0	30,0	4248661	50
PG 11	3 x	3,0	6,0	20,0	26,0	4248653	50
PG 11	3 x	3,5	6,0	20,0	26,0	4248407	50
PG 11	3 x	4,0	6,0	20,0	26,0	4248654	50
PG 11	3 x	5,0	6,5	24,0	30,0	4248662	50
PG 11	3 x	5,3	6,5	22,0	28,0	4248655	50
PG 11	4 x	1,5	6,0	20,0	26,0	4248656	50
PG 11	4 x	3,5	6,0	20,0	26,0	4248657	50
PG 11	6 x	2,0	6,0	20,0	26,0	4248658	50
PG 11	6 x	2,5	6,0	20,0	26,0	4248659	50
PG 13,5	2 x	3,0	6,5	22,0	28,0	4248663	50
PG 13,5	2 x	5,0	6,5	22,0	28,0	4248664	50
PG 13,5	2 x	6,0	6,5	22,0	28,0	4248404	50
PG 13,5	3 x	2,0	6,5	22,0	28,0	4248665	50
PG 13,5	3 x	3,0	6,5	22,0	28,0	4248666	50
PG 13,5	3 x	4,0	6,5	22,0	28,0	4248667	50
PG 13,5	3 x	5,3	6,5	24,0	30,0	4248668	50
PG 13,5	3 x	6,0	6,5	24,0	30,0	4248669	50
PG 13,5	4 x	3,0	6,5	22,0	28,0	4248670	50
PG 13,5	4 x	4,0	6,5	22,0	28,0	4248671	50
PG 13,5	4 x	5,0	6,5	24,0	30,0	4248673	50
PG 13,5	4 x	5,3	6,5	24,0	30,0	4248672	50
PG 13,5	6 x	3,5	6,5	22,0	28,0	4248674	50
PG 13,5	10 x	2,0	6,5	22,0	28,0	4248675	50

vanjski navoj External thread	broj otvora Quantity	promjer otvora mm Hole diameter mm	duljina navoja (E) mm Thread length (E) mm	SW 1/2 mm SW 1/2 mm	ukupna duljina (L) mm Complete length (L) mm	broj artikla niklani Art. no. nickel-plated	JP kom. PU pcs.
PG 16	2 x	4,0	6,5	24,0	30,0	4248678	50
PG 16	2 x	5,0	6,5	24,0	30,0	4248679	50
PG 16	2 x	6,0	6,5	24,0	30,0	4248680	50
PG 16	2 x	7,0	6,5	24,0	30,0	4248409	50
PG 16	2 x	8,0	7,0	30,0	35,0	4248681	50
PG 16	2 x	9,0	7,0	30,0	35,0	4248682	50
PG 16	3 x	3,0	6,5	24,0	30,0	4248683	50
PG 16	3 x	4,0	6,5	24,0	30,0	4248684	50
PG 16	3 x	5,0	6,5	24,0	30,0	4248677	50
PG 16	3 x	5,6	6,5	24,0	30,0	4248685	50
PG 16	3 x	6,0	6,5	24,0	30,0	4248686	50
PG 16	3 x	7,0	7,0	30,0	35,0	4248695	50
PG 16	3 x	8,0	6,5	24,0	30,0	4248687	50
PG 16	4 x	4,0	6,5	24,0	30,0	4248688	50
PG 16	4 x	5,0	7,0	30,0	35,0	4248689	50
PG 16	4 x	6,0	7,0	30,0	35,0	4248694	50
PG 16	5 x	4,0	6,5	24,0	30,0	4248690	50
PG 16	5 x	5,0	7,0	30,0	35,0	4248691	50
PG 16	6 x	4,0	6,5	24,0	30,0	4248692	50
PG 16	7 x	4,0	7,0	30,0	35,0	4248693	50
PG 21	2 x	4,5	7,0	30,0	35,0	4248696	20
PG 21	2 x	8,0	7,0	30,0	35,0	4248697	20
PG 21	2 x	8,7	8,0	40,0	43,0	4248698	20
PG 21	2 x	9,0	8,0	40,0	43,0	4248699	20
PG 21	2 x	11,0	8,0	40,0	43,0	4248700	20
PG 21	3 x	7,0	7,0	30,0	35,0	4248542	20
PG 21	3 x	8,0	7,0	30,0	35,0	4248531	20
PG 21	3 x	9,0	8,0	40,0	43,0	4248701	20
PG 21	4 x	5,0	7,0	30,0	35,0	4248702	20
PG 21	4 x	6,0	7,0	30,0	35,0	4248529	20
PG 21	4 x	7,5	8,0	40,0	43,0	4248709	20
PG 21	4 x	8,0	8,0	40,0	43,0	4248703	20
PG 21	5 x	5,0	7,0	30,0	35,0	4248704	20
PG 21	5 x	6,0	7,0	30,0	35,0	4248539	20
PG 21	5 x	6,5	7,0	30,0	35,0	4248541	20
PG 21	6 x	4,0	7,0	30,0	35,0	4248705	20
PG 21	6 x	5,0	7,0	30,0	35,0	4248706	20
PG 21	6 x	6,0	8,0	40,0	43,0	4248713	20
PG 21	6 x	6,5	8,0	40,0	43,0	4248710	20
PG 21	6 x	7,0	8,0	40,0	43,0	4248715	20
PG 21	7 x	6,0	8,0	40,0	43,0	4248714	20
PG 21	8 x	4,0	7,0	30,0	35,0	4248707	20
PG 21	8 x	5,0	7,0	30,0	35,0	4248543	20
PG 21	11 x	5,0	8,0	40,0	43,0	4248712	20
PG 21	21 x	2,0	7,0	30,0	35,0	4248708	20
PG 21	28 x	3,0	8,0	40,0	43,0	4248711	20
PG 29	2 x	9,0	8,0	40,0	43,0	4248716	20
PG 29	2 x	11,0	8,0	40,0	43,0	4248717	20
PG 29	3 x	9,0	8,0	40,0	43,0	4248719	20
PG 29	3 x	11,0	8,0	40,0	43,0	4248720	20
PG 29	4 x	8,0	8,0	40,0	43,0	4248629	20
PG 29	4 x	9,0	8,0	40,0	43,0	4248721	20
PG 29	4 x	10,0	8,0	40,0	43,0	4248722	20
PG 29	6 x	6,0	8,0	40,0	43,0	4248627	20
PG 29	6 x	6,5	8,0	40,0	43,0	4248610	20
PG 29	6 x	7,0	8,0	40,0	43,0	4248614	20
PG 29	7 x	6,0	8,0	40,0	43,0	4248631	20
PG 29	7 x	7,0	8,0	40,0	43,0	4248723	20
PG 29	8 x	5,0	8,0	40,0	43,0	4248724	20
PG 29	8 x	6,0	8,0	40,0	43,0	4248632	20
PG 29	10 x	6,0	8,0	40,0	43,0	4248725	20
PG 29	11 x	5,0	8,0	40,0	43,0	4248634	20
PG 29	28 x	3,0	8,0	40,0	43,0	4248612	20

Uvodnica kabelska WADI-TEC Duplo

mesing niklani
brtva sa više otvora
metrički navoj, kratki

Cable gland WADI-TEC Duplo

nickel-plated brass
multi-holed sealing
metric thread, short

RoHS | IP 68 | EN 50262

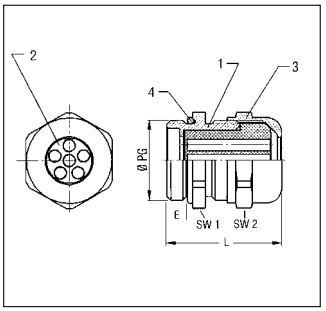

Materijal:
- 1/3: tijelo kabelske uvodnice/ glava: mesing niklani
- 2: brtva: tefabloc
- 4: brtva za vanjski navoj: nitril

Radna temperatura:
-25°C do 120°C

Boje/izvedbe:
- vanjski navoj: metrički
- kratki navoj
- duga brtva sa više otvora
- brtvljenje otvora
- bez potrebe za čepovima otvora brtve

Svojstva:
- nepropusnost za vodu i plinove
- potpuno zaštićeno od okretanja
- može se kombinirati s raznim brtvenim umecima

Pribor (vidi poglavlje…):
- Matice (3.3)
- Montažni alat Mon.Za (3.1)

Upotreba:
- izrada strojeva i aparata
- tehnologija mjernih i kontrolnih instrumenata
- instalacije u proizvodnim postrojenjima
- kemijska industrija

Material:
- 1/3: Gland element/Cap nut: nickel-plated brass
- 2: Sealing: Tefabloc
- 4: Sealing for External thread: Nitrile

Temperature range:
-25°C to 120°C

Colour(s)/Designs:
- External thread: metric
- short thread
- long multi-holed sealing
- Blind hole sealing
- No blind pin required

Characteristics:
- gas and water-tight
- completely twist protected
- combinable with various sealing inserts

Accessories (see chapter…):
- lock nuts (3.3)
- Mounting tool Mon.Za (3.1)

Applications:
- Machines and apparatus construction
- Measuring and control engineering
- Plant installations
- Chemical industry

vanjski navoj External thread	broj otvora Quantity	promjer otvora mm Hole diameter mm	duljina navoja (E) mm Thread length (E) mm	SW 1 mm SW 1 mm	SW 2 mm SW 2 mm	ukupna duljina (L) mm Complete length (L) mm	broj artikla niklani Art. no. nickel-plated	JP kom. PU pcs.
M 16 x 1,5	2 x	1,0	7,0	17,0	17,0	13,0	4249600	50
M 16 x 1,5	2 x	3,0	7,0	17,0	17,0	13,0	4249601	50
M 16 x 1,5	2 x	3,5	7,0	17,0	17,0	13,0	4249602	50
M 16 x 1,5	2 x	4,0	7,0	17,0	17,0	13,0	4249603	50
M 16 x 1,5	3 x	3,0	7,0	17,0	17,0	13,0	4249604	50
M 20 x 1,5	2 x	2,3	7,0	20,0	22,0	28,0	4249610	50
M 20 x 1,5	2 x	3,0	7,0	22,0	22,0	29,0	4249611	50
M 20 x 1,5	2 x	3,5	7,0	20,0	22,0	28,0	4249612	50
M 20 x 1,5	2 x	4,0	7,0	20,0	22,0	28,0	4249613	50
M 20 x 1,5	2 x	5,0	7,0	22,0	22,0	29,0	4249614	50
M 20 x 1,5	2 x	6,0	7,0	22,0	22,0	29,0	4249615	50
M 20 x 1,5	3 x	2,0	7,0	22,0	22,0	29,0	4249616	50
M 20 x 1,5	3 x	3,0	7,0	22,0	22,0	29,0	4249617	50
M 20 x 1,5	3 x	3,5	7,0	20,0	22,0	28,0	4249618	50
M 20 x 1,5	3 x	4,0	7,0	22,0	22,0	29,0	4249619	50
M 20 x 1,5	3 x	5,3	7,0	22,0	22,0	29,0	4249620	50
M 20 x 1,5	4 x	1,5	7,0	20,0	22,0	28,0	4249621	50
M 20 x 1,5	4 x	3,0	7,0	22,0	22,0	29,0	4249622	50
M 20 x 1,5	4 x	3,5	7,0	20,0	22,0	28,0	4249623	50
M 20 x 1,5	4 x	4,0	7,0	22,0	22,0	29,0	4249624	50
M 20 x 1,5	6 x	2,0	7,0	20,0	22,0	28,0	4249625	50
M 20 x 1,5	6 x	2,5	7,0	20,0	22,0	28,0	4249626	50
M 20 x 1,5	6 x	3,5	7,0	22,0	22,0	29,0	4249627	50
M 20 x 1,5	10 x	2,0	7,0	22,0	22,0	29,0	4249628	50
M 25 x 1,5	2 x	4,0	8,0	24,0	26,0	31,0	4249640	20
M 25 x 1,5	2 x	4,5	8,0	30,0	30,0	37,0	4249641	20
M 25 x 1,5	2 x	5,0	8,0	24,0	26,0	31,0	4249642	20
M 25 x 1,5	2 x	6,0	8,0	24,0	26,0	31,0	4249643	20
M 25 x 1,5	2 x	7,0	8,0	24,0	26,0	31,0	4249644	20
M 25 x 1,5	2 x	8,0	8,0	30,0	30,0	37,0	4249645	20
M 25 x 1,5	3 x	3,0	8,0	24,0	26,0	31,0	4249646	20
M 25 x 1,5	3 x	4,0	8,0	24,0	26,0	31,0	4249647	20
M 25 x 1,5	3 x	5,0	8,0	24,0	26,0	31,0	4249648	20
M 25 x 1,5	3 x	5,6	8,0	24,0	26,0	31,0	4249649	20
M 25 x 1,5	3 x	6,0	8,0	24,0	26,0	31,0	4249650	20
M 25 x 1,5	3 x	7,0	8,0	30,0	30,0	37,0	4249651	20
M 25 x 1,5	3 x	8,0	8,0	30,0	30,0	37,0	4249652	20
M 25 x 1,5	4 x	4,0	8,0	24,0	26,0	31,0	4249653	20
M 25 x 1,5	4 x	5,0	8,0	30,0	30,0	37,0	4249654	20
M 25 x 1,5	4 x	6,0	8,0	30,0	30,0	37,0	4249655	20
M 25 x 1,5	5 x	4,0	8,0	24,0	26,0	31,0	4249656	20
M 25 x 1,5	5 x	5,0	8,0	30,0	30,0	37,0	4249657	20

vanjski navoj External thread	broj otvora Quantity	promjer otvora mm Hole diameter mm	duljina navoja (E) mm Thread length (E) mm	SW 1 mm SW 1 mm	SW 2 mm SW 2 mm	ukupna duljina (L) mm Complete length (L) mm	broj artikla niklani Art. no. nickel-plated	JP kom. PU pcs.
M 25 x 1,5	5 x	6,0	8,0	30,0	30,0	37,0	4249658	20
M 25 x 1,5	5 x	6,5	8,0	30,0	30,0	37,0	4249659	20
M 25 x 1,5	6 x	4,0	8,0	30,0	30,0	37,0	4249660	20
M 25 x 1,5	6 x	5,0	8,0	30,0	30,0	37,0	4249661	20
M 25 x 1,5	8 x	4,0	8,0	30,0	30,0	37,0	4249662	20
M 25 x 1,5	8 x	5,0	8,0	30,0	30,0	37,0	4249663	20
M 25 x 1,5	21 x	2,0	8,0	30,0	30,0	37,0	4249664	20
M 32 x 1,5	2 x	4,5	8,5	30,0	33,0	38,0	4249670	20
M 32 x 1,5	2 x	8,0	8,5	30,0	33,0	38,0	4249671	20
M 32 x 1,5	2 x	9,0	8,5	40,0	40,0	45,0	4249672	20
M 32 x 1,5	2 x	11,0	8,5	40,0	40,0	45,0	4249673	20
M 32 x 1,5	2 x	12,0	8,5	40,0	40,0	45,0	4249674	20
M 32 x 1,5	3 x	7,0	8,5	30,0	33,0	38,0	4249675	20
M 32 x 1,5	3 x	8,0	8,5	30,0	33,0	38,0	4249676	20
M 32 x 1,5	3 x	9,0	8,5	40,0	40,0	45,0	4249677	20
M 32 x 1,5	3 x	11,0	8,5	40,0	40,0	45,0	4249678	20
M 32 x 1,5	4 x	5,0	8,5	30,0	33,0	38,0	4249679	20
M 32 x 1,5	4 x	6,0	8,5	30,0	33,0	38,0	4249680	20
M 32 x 1,5	4 x	8,0	8,5	40,0	40,0	45,0	4249681	20
M 32 x 1,5	4 x	9,0	8,5	40,0	40,0	45,0	4249682	20
M 32 x 1,5	4 x	10,0	8,5	40,0	40,0	45,0	4249683	20
M 32 x 1,5	5 x	5,0	8,5	30,0	33,0	38,0	4249684	20
M 32 x 1,5	5 x	6,0	8,5	30,0	33,0	38,0	4249685	20
M 32 x 1,5	5 x	6,5	8,5	30,0	33,0	38,0	4249686	20
M 32 x 1,5	6 x	4,0	8,5	30,0	33,0	38,0	4249687	20
M 32 x 1,5	6 x	5,0	8,5	30,0	33,0	38,0	4249688	20
M 32 x 1,5	6 x	6,0	8,5	40,0	40,0	45,0	4249689	20
M 32 x 1,5	6 x	6,5	8,5	40,0	40,0	45,0	4249690	20
M 32 x 1,5	6 x	7,0	8,5	40,0	40,0	45,0	4249691	20
M 32 x 1,5	7 x	6,0	8,5	40,0	40,0	45,0	4249692	20
M 32 x 1,5	7 x	7,0	8,5	40,0	40,0	45,0	4249693	20
M 32 x 1,5	8 x	4,0	8,5	30,0	33,0	38,0	4249694	20
M 32 x 1,5	8 x	5,0	8,5	40,0	40,0	45,0	4249695	20
M 32 x 1,5	8 x	6,0	8,5	40,0	40,0	45,0	4249696	20
M 32 x 1,5	10 x	6,0	8,5	40,0	40,0	45,0	4249697	20
M 32 x 1,5	11 x	5,0	8,5	40,0	40,0	45,0	4249698	20
M 32 x 1,5	21 x	2,0	8,5	30,0	33,0	38,0	4249699	20
M 32 x 1,5	28 x	3,0	8,5	40,0	40,0	45,0	4249701	20

Uvodnica kabelska WADI-TEC

nehrđajući čelik 1.4404, INOX 316L
ECA-stezni prsten
PG-/metrički navoj, dugi

Cable gland WADI-TEC

stainless steel 1.4404, INOX 316L
ECA-Clamping-Ring
PG-/metric thread, long

RoHS | IP 68 | EN 50262

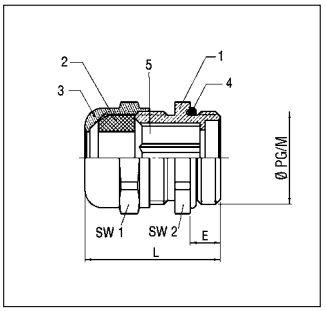

Materijal:
- 1/3: tijelo kabelske uvodnice/ glava: nehrđajući čelik 1.4404, INOX 316L
- 2: brtva: santopren
- 4: brtva za vanjski navoj: nitril
- 5: ECA-stezni prsten:
  PG 7-29: polikarbonat (PC)
  PG 36-48: ∗ polioksimetilen (POM)

Radna temperatura:
PC: -25°C do 120°C
∗POM: -30°C do 95°C

Boje/izvedbe:
- vanjski navoj: PG/metrički
- dugi navoj
- ECA-stezni prsten

Svojstva:
- otpornost na kiseline i lužine
- nepropusnost za vodu i plinove
- potpuno zaštićeno od okretanja
- može se kombinirati s raznim brtvenim umecima

Pribor (vidi poglavlje…):
- Matice (3.3)
- Montažni alat Mon.Za (3.1)

Upotreba:
- izrada strojeva i aparata
- tehnologija automatizacije
- vjetroelektrane
- prehrambena industrija
- Offshore uređaji

Material:
- 1/3: Gland element/Cap nut: Stainless steel 1.4404, INOX 316L
- 2: Sealing: Santoprene
- 4: Sealing for External thread: Nitrile
- 5: ECA-Clamping-Ring
  PG 7-29: Polycarbonate (PC)
  PG 36-48: ∗ Polyoxymethylene (POM)

Temperature range:
PC: -25°C to 120°C
∗POM: -30°C to 95°C

Colour(s)/Designs:
- External thread: PG/metric
- long thread
- ECA-Clamping-Ring

Characteristics:
- acid and lye resistant
- gas and water-tight
- completely twist protected
- combinable with various sealing inserts

Accessories (see chapter…):
- lock nuts (3.3)
- Mounting tool Mon.Za (3.1)

Applications:
- Machines and apparatus construction
- Automation technology
- Wind power station
- Food Industries
- Off-Shore apparatus

vanjski navoj External thread	za kabel promjera mm Clamping range mm	duljina navoja (E) mm Thread length (E) mm	SW 1 mm SW 1 mm	SW 2 mm SW 2 mm	ukupna duljina (L) mm Complete length (L) mm	broj artikla nehrđajući čelik Art. no. stainless steel	JP kom. PU pcs.
PG / PG							
PG 7	3,0 - 6,0	15,0	14,0	14,0	34,0	4222075	20
PG 9	5,0 - 8,0	15,0	17,0	17,0	34,0	4222091	20
PG 11	6,0 - 10,0	15,0	20,0	20,0	35,0	4222113	20
Pg 13,5	8,0 - 12,0	15,0	22,0	22,0	36,5	4222130	10
PG 16	9,5 - 14,0	15,0	24,0	24,0	38,5	4222164	10
PG 21	11,5 - 18,0	15,0	30,0	30,0	43,0	4222210	5
PG 29	15,0 - 24,0	15,0	40,0	40,0	50,0	4222296	5
PG 36∗	23,0 - 30,0	18,0	50,0	50,0	59,0	4222369	5
PG 42∗	26,0 - 35,0	18,0	58,0	58,0	65,0	4222423	1
PG 48∗	35,0 - 40,0	18,0	64,0	64,0	67,0	4222482	1
metrički / metric							
M 12 x 1,5	3,0 - 6,0	13,0	14,0	14,0	33,0	4222012	20
M 16 x 1,5/7	3,0 - 6,0	13,0	14,0	17,0	33,0	4222016	20
M 16 x 1,5/9	5,0 - 8,0	13,0	17,0	18,0	33,0	4222017	20
M 20 x 1,5/11	6,0 - 10,0	13,0	20,0	22,0	34,0	4222020	10
M 20 x 1,5/13	8,0 - 12,0	13,0	22,0	22,0	35,0	4222021	10
M 25 x 1,5/16	9,5 - 14,0	14,0	24,0	27,0	37,0	4222025	5
M 25 x 1,5/21	11,5 - 18,0	14,0	30,0	30,0	43,0	4222026	5
M 32 x 1,5/21	11,5 - 18,0	14,5	30,0	34,0	44,0	4222034	1
M 32 x 1,5/29	15,0 - 24,0	14,5	40,0	40,0	51,0	4222033	1
M 40 x 1,5	15,0 - 24,0	14,5	40,0	42,0	51,0	4222041	1
M 50 x 1,5∗	23,0 - 30,0	15,5	50,0	55,0	57,0	4222050	1
M 63 x 1,5∗	26,0 - 35,0	16,5	58,0	70,0	64,0	4222063	1

Uvodnica kabelska XXL
mesing niklani
metrički navoj

Cable gland XXL
nickel-plated brass
metric thread

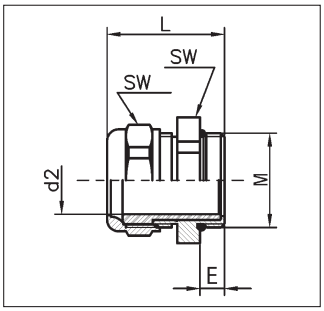

RoHS | IP 68 10 bar

Materijal:
- tijelo kabelske uvodnice: mesing niklani
- brtva: TPE-V
- O-brtva: NBR/EPDM

Radna temperatura:
-40°C do 135°C

Boje/izvedbe:
- vanjski navoj: metrički

Svojstva:
- nepropusnost za vodu i ulje

Pribor (vidi poglavlje…):
- Matice (3.3)

Upotreba:
- izrada strojeva i aparata
- tehnologija mjernih i kontrolnih instrumenata
- instalacije u proizvodnim postrojenjima
- energetska postrojenja
- pogonska tehnologija

Material:
- Gland element: nickel-plated brass
- Sealing: TPE-V
- O-ring: NBR/EPDM

Temperture range:
-40°C to 135°C

Colour(s)/Designs:
- External thread: metric

Characteristics:
- oil and water-tight

Accessories (see chapter…):
- lock nuts (3.3)

Applications:
- Machines and apparatus construction
- Measuring and control engineering
- Plant installations
- Power engineering
- Drive technology

3.1

vanjski navoj External thread	za kabel (d2) Ø mm for cable (d2) Ø mm	duljina navoja (E) mm Thread length (E) mm	SW mm SW mm	ukupna duljina (L) mm Complete length (L) mm	broj artikla niklani Art. no. nickel-plated	JP kom. PU pcs.
M 105 x 2,0	84,0 - 90,0	20,0	120,0	85,0	4651725	1
M 105 x 2,0	89,0 - 95,0	20,0	120,0	85,0	4651726	1
M 110 x 2,0	84,0 - 90,0	22,0	120,0	87,0	4651727	1
M 110 x 2,0	89,0 - 95,0	22,0	120,0	87,0	4651728	1

Uvodnica kabelska MAXXL
mesing niklani
metrički navoj

Cable gland MAXXL
nickel-plated brass
metric thread

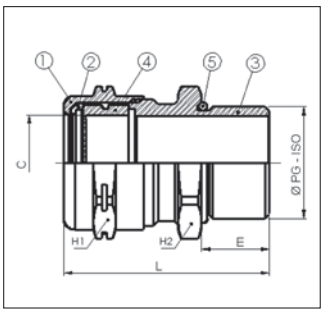

RoHS | IP 68

Materijal:
- 1/2/3: glava uvodnice/brtveni prsten/ tijelo uvodnice: mesing niklani
- 4: brtva: neopren
- 5: O-brtva: nitril

Radna temperatura:
-40°C do 100°C

Boje/izvedbe:
- vanjski navoj: metrički

Material:
- 1/2/3: cap nut/slide ring/ gland element: nickel-plated brass
- 4: sealing: neoprene
- 5: o-ring: nitrile

Temperture range:
-40°C to 100°C

Colour(s)/Designs:
- External thread: metric

vanjski navoj External thread	za kabel promjera mm Clamping range mm	C mm C mm	duljina navoja (E) mm Thread length (E) mm	SW (H1/H2) mm SW (H1/H2) mm	ukupna duljina (L) mm Complete length (L) mm	broj artikla niklani Art. no. nickel-plated	JP kom. PU pcs.
M 12 x 1,5	4,0 - 8,0	8,0	7,0	17/17	33,0	4201200	1
M 16 x 1,5	7,0 - 12,0	12,0	7,0	20/20	30,0	4201201	1
M 20 x 1,5	9,0 - 16,0	16,2	7,0	24/24	34,0	4201202	1
M 25 x 1,5	9,0 - 16,0	16,2	8,0	24/30	35,0	4201203	1
M 25 x 1,5	13,0 - 20,5	20,5	8,0	30/30	36,0	4201204	1
M 32 x 1,5	13,0 - 21,0	21,4	8,5	30/36	36,5	4201205	1
M 32 x 1,5	16,0 - 27,0	27,5	8,5	40/40	53,5	4201206	1
M 40 x 1,5	21,0 - 34,0	34,3	8,5	48/48	59,5	4201207	1
M 50 x 1,5	28,0 - 41,0	41,5	9,5	55/55	65,5	4201208	1
M 63 x 1,5	34,0 - 47,5	48,0	10,5	64/68	76,5	4201209	1
M 63 x 1,5	39,0 - 54,0	54,9	10,5	70/70	78,5	4201210	1
M 75 x 1,5	48,0 - 65,0	66,0	11,5	85/85	93,5	4201211	1
M 80 x 2,0	55,0 - 74,0	74,0	12,0	95/95	104,0	4201212	1
M 90 x 2,0	65,0 - 83,0	83,0	12,0	110/110	113,0	4201213	1
M 100 x 2,0	74,0 - 93,0	93,0	12,0	120/120	113,0	4201214	1

Uvodnica kabelska WADI-A

mesing niklani
PG-navoj, kratki

Cable gland WADI-A

nickel-plated brass
PG-thread, short

RoHS | IP 68

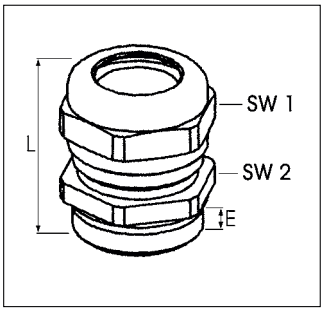

Materijal:
- tijelo kabelske uvodnice: mesing niklani
- brtva: elastomer
- brtveni prsten za vanjski navoj: nitril

Radna temperatura:
-25°C do 120°C

Boje/izvedbe:
- vanjski navoj: PG
- kratki navoj
- *) brtva 2-djelna

Svojstva:
- nepropusnost za vodu i plinove
- otpornost na izvlačenje, istezanje i pritisak
- brtva otporna na: ulje, morsku vodu i starenje

Pribor (vidi poglavlje…):
- Matice (3.3)
- Montažni alat Mon.Za (3.1)

Upotreba:
- izrada strojeva i aparata
- tehnologija mjernih i kontrolnih instrumenata
- instalacije u proizvodnim postrojenjima

Material:
- Gland element: nickel-plated brass
- Sealing: Elastomeric
- Sealing for External thread: Nitrile

Temperature range:
-25°C to 120°C

Colour(s)/Designs:
- External thread: PG
- short thread
- *) two-part-sealing

Characteristics:
- gas and water-tight
- pull, tensile and compression strength
- sealing resistant against: oil, ageing, sea water

Accessories (see chapter…):
- lock nuts (3.3)
- Mounting tool Mon.Za (3.1)

Applications:
- Machines and apparatus construction
- Measuring and control engineering
- Plant installations

vanjski navoj External thread	tip Type	za kabel promjera mm Clamping range mm	duljina navoja (E) mm Thread length (E) mm	SW 1 mm SW 1 mm	SW 2 mm SW 2 mm	ukupna duljina (L) mm Complete length (L) mm	broj artikla niklani Art. no. nickel-plated	JP kom. PU pcs.
PG 7	507/3	2,0 - 3,0	6,0	14,0	14,0	22,0	4200055	100
PG 7	507/7	4,0 - 7,0	6,0	14,0	14,0	22,0	4200056	50
PG 7	507	4,0 - 6,5	6,0	14,0	14,0	22,0	4200071	100
PG 9	509/7	5,0 - 7,0	6,5	17,0	17,0	24,0	4200101	50
PG 9	509/10	7,0 - 10,0	6,5	17,0	17,0	24,0	4200102	50
PG 9	509/8	6,0 - 8,0	6,5	17,0	17,0	24,0	4200080	50
PG 9	509	7,0 - 10,0	6,5	17,0	17,0	24,0	4200098	50
PG 11	511/7	5,0 - 7,0	6,0	17,0	20,0	20,0	4200128	50
PG 11	511/10	6,5 - 10,5	6,5	24,0	24,0	20,0	4200143	50
PG 11	511/8	6,0 - 8,0	6,0	17,0	20,0	20,0	4200500	50
PG 11	511	7,0 - 10,0	6,0	17,0	20,0	20,0	4200110	50
PG 11	511/12*)	5,0 - 12,0	6,0	20,0	20,0	20,0	4200144	50
PG 11	511/15*)	7,0 - 15,0	6,5	24,0	24,0	20,0	4200152	50
PG 13,5	513/10	6,5 - 10,5	6,5	24,0	24,0	28,0	4200178	50
PG 13,5	513/12	8,0 - 12,0	6,5	24,0	24,0	28,0	4200179	50
PG 13,5	513*)	7,0 - 15,0	6,5	24,0	24,0	28,0	4200136	50
PG 13,5	513/15	10,0 - 15,0	6,5	24,0	24,0	28,0	4200537	100
PG 16	516/10	6,5 - 10,5	6,5	24,0	24,0	28,0	4200186	50
PG 16	516/12	8,0 - 12,0	6,5	24,0	24,0	28,0	4200187	25
PG 16	516*)	7,0 - 15,0	6,5	24,0	24,0	28,0	4200160	25
PG 21	521*)	12,0 - 20,5	7,5	32,0	32,0	32,0	4200217	25
PG 21	521/21	16,0 - 20,5	7,5	32,0	32,0	32,0	4200195	25
PG 21	521/22	17,0 - 21,5	7,5	32,0	32,0	32,0	4200196	20
PG 29	529*)	16,0 - 26,0	8,0	38,0	38,0	38,0	4200292	10
PG 36	536	24,0 - 35,0	9,0	50,0	50,0	37,0	4200365	10
PG 42	542	35,0 - 45,0	10,0	58,0	58,0	41,0	4200420	5
PG 48	548	38,0 - 49,0	11,0	64,0	64,0	44,0	4200489	5

Uvodnica kabelska WADI-A

mesing niklani
metrički navoj, kratki

Cable gland WADI-A

nickel-plated brass
metric thread, short

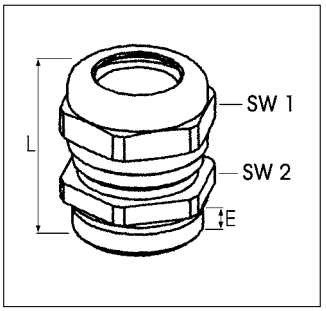

RoHS | IP 68 | EN 50262

Materijal:
- tijelo kabelske uvodnice: mesing niklani
- brtva: elastomer
- brtveni prsten za vanjski navoj: nitril

Radna temperatura:
-25°C do 120°C

Boje/izvedbe:
- vanjski navoj: metrički
- kratki navoj
- *) brtva 2-djelna

Svojstva:
- nepropusnost za vodu i plinove
- otpornost na izvlačenje, istezanje i pritisak
- brtva otporna na: ulje, morsku vodu i starenje

Pribor (vidi poglavlje…):
- Matice (3.3)
- Montažni alat Mon.Za (3.1)

Upotreba:
- izrada strojeva i aparata
- tehnologija mjernih i kontrolnih instrumenata
- instalacije u proizvodnim postrojenjima

Material:
- Gland element: nickel-plated brass
- Sealing: Elastomeric
- Sealing for External thread: Nitrile

Temperature range:
-25°C to 120°C

Colour(s)/Designs:
- External thread: metric
- short thread
- *) two-part-sealing

Characteristics:
- gas and water-tight
- pull, tensile and compression strength
- sealing resistant against: oil, ageing, sea water

Accessories (see chapter…):
- lock nuts (3.3)
- Mounting tool Mon.Za (3.1)

Applications:
- Machines and apparatus construction
- Measuring and control engineering
- Plant installations

vanjski navoj External thread	tip Type	za kabel promjera mm Clamping range mm	duljina navoja (E) mm Thread length (E) mm	SW 1 mm SW 1 mm	SW 2 mm SW 2 mm	ukupna duljina (L) mm Complete length (L) mm	broj artikla niklani Art. no. nickel-plated	JP kom. PU pcs.
M 12 x 1,5	M1203	2,0 - 3,0	7,0	14,0	14,0	23,0	4200750	50
M 12 x 1,5	M1200	4,0 - 6,5	7,0	14,0	14,0	23,0	4200751	50
M 12 x 1,5	M1207	4,0 - 7,0	7,0	14,0	14,0	23,0	4200752	50
M 16 x 1,5	M1607	5,0 - 7,0	7,0	17,0	17,0	25,0	4200760	50
M 16 x 1,5	M1608	6,0 - 8,0	7,0	17,0	17,0	25,0	4200761	50
M 16 x 1,5	M1600	7,0 - 10,0	7,0	17,0	17,0	25,0	4200762	50
M 16 x 1,5	M1610	7,0 - 10,0	7,0	17,0	17,0	25,0	4200763	50
M 16 x 1,5	M1612*)	5,0 - 12,0	7,0	20,0	20,0	25,0	4200764	50
M 20 x 1,5	M2010	6,5 - 10,5	7,0	24,0	24,0	29,0	4200770	50
M 20 x 1,5	M2015	10,0 - 15,0	7,0	24,0	24,0	29,0	4200771	50
M 20 x 1,5	M2000*)	7,0 - 15,0	7,0	24,0	24,0	29,0	4200772	50
M 25 x 1,5	M2510	6,5 - 10,5	8,0	24,0	27,0	29,0	4200773	20
M 25 x 1,5	M2500*)	7,0 - 15,0	8,0	24,0	27,0	29,0	4200780	20
M 25 x 1,5	M2521*)	12,0 - 20,5	8,0	32,0	32,0	33,0	4200781	20
M 25 x 1,5	M2520	16,0 - 20,5	8,0	32,0	32,0	33,0	4200782	20
M 32 x 1,5	M3232*)	16,0 - 26,0	8,5	38,0	38,0	39,0	4200790	20
M 40 x 1,5	M4040*)	24,0 - 35,0	8,5	50,0	50,0	36,0	4200794	20
M 50 x 1,5	M5050*)	35,0 - 45,0	9,5	58,0	58,0	40,0	4200795	10
M 63 x 1,5	M6363*)	38,0 - 49,0	10,5	64,0	64,0	43,0	4200796	5

Uvodnica kabelska WADI-A

mesing niklani
metrički navoj, dugi

Cable gland WADI-A

nickel-plated brass
metric thread, long

RoHS | IP 68 | EN 50262

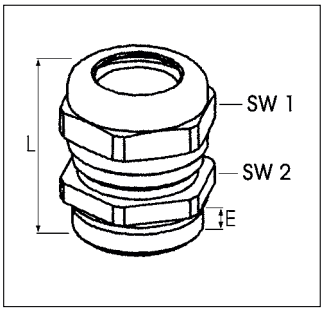

Materijal:
- tijelo kabelske uvodnice: mesing niklani
- brtva: elastomer
- brtveni prsten za vanjski navoj: nitril

Radna temperatura:
-25°C do 120°C

Boje/izvedbe:
- vanjski navoj: metrički
- dugi navoj
- *) brtva 2-djelna

Svojstva:
- nepropusnost za vodu i plinove
- otpornost na izvlačenje, istezanje i pritisak
- brtva otporna na: ulje, morsku vodu i starenje

Pribor (vidi poglavlje…):
- Matice (3.3)
- Montažni alat Mon.Za (3.1)

Upotreba:
- izrada strojeva i aparata
- tehnologija mjernih i kontrolnih instrumenata
- instalacije u proizvodnim postrojenjima

Material:
- Gland element: nickel-plated brass
- Sealing: Elastomeric
- Sealing for External thread: Nitrile

Temperature range:
-25°C to 120°C

Colour(s)/Designs:
- External thread: metric
- long thread
- *) two-part-sealing

Characteristics:
- gas and water-tight
- pull, tensile and compression strength
- sealing resistant against: oil, ageing, sea water

Accessories (see chapter…):
- lock nuts (3.3)
- Mounting tool Mon.Za (3.1)

Applications:
- Machines and apparatus construction
- Measuring and control engineering
- Plant installations

vanjski navoj External thread	tip Type	za kabel promjera mm Clamping range mm	duljina navoja (E) mm Thread length (E) mm	SW 1 mm SW 1 mm	SW 2 mm SW 2 mm	ukupna duljina (L) mm Complete length (L) mm	broj artikla niklani Art. no. nickel-plated	JP kom. PU pcs.
M 12 x 1,5	MLG1203	2,0 - 3,0	13,0	14,0	14,0	29,0	4200800	50
M 12 x 1,5	MLG1200	4,0 - 6,5	13,0	14,0	14,0	29,0	4200801	50
M 12 x 1,5	MLG1207	4,0 - 7,0	13,0	14,0	14,0	29,0	4200802	50
M 16 x 1,5	MLG1607	5,0 - 7,0	13,0	17,0	17,0	31,0	4200810	50
M 16 x 1,5	MLG1608	6,0 - 8,0	13,0	17,0	17,0	31,0	4200811	50
M 16 x 1,5	MLG1600	7,0 - 10,0	13,0	17,0	17,0	31,0	4200812	50
M 16 x 1,5	MLG1610	7,0 - 10,0	13,0	17,0	17,0	31,0	4200813	50
M 16 x 1,5	MLG1612*)	5,0 - 12,0	13,0	20,0	20,0	31,0	4200814	50
M 20 x 1,5	MLG2010	6,5 - 10,5	14,0	24,0	24,0	35,0	4200820	50
M 20 x 1,5	MLG2015	10,0 - 15,0	14,0	24,0	24,0	35,0	4200821	50
M 20 x 1,5	MLG2000*)	7,0 - 15,0	14,0	24,0	24,0	35,0	4200822	50
M 25 x 1,5	MLG2510	6,5 - 10,5	14,0	24,0	27,0	35,0	4200830	20
M 25 x 1,5	MLG2500*)	7,0 - 15,0	14,0	24,0	27,0	35,0	4200831	20
M 25 x 1,5	MLG2521*)	12,0 - 20,5	14,0	32,0	32,0	39,0	4200832	20
M 25 x 1,5	MLG2520	16,0 - 20,5	14,0	32,0	32,0	39,0	4200833	20
M 32 x 1,5	MLG3232*)	16,0 - 26,0	14,5	38,0	38,0	45,0	4200835	20
M 40 x 1,5	MLG4040*)	24,0 - 35,0	14,5	50,0	50,0	42,0	4200836	20
M 50 x 1,5	MLG5050*)	35,0 - 45,0	15,5	58,0	58,0	46,0	4200837	10
M 63 x 1,5	MLG6363*)	38,0 - 49,0	16,5	64,0	64,0	49,0	4200840	5

Uvodnica kabelska tip ZEV

mesing niklani sa zaštitom od izvlačenja kabela

Cable gland Type ZEV

nickel-plated brass with strain relief

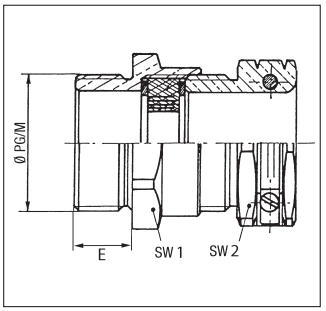

RoHS | IP 55 | EN 50262

Materijal:
- tijelo kabelske uvodnice: mesing niklani

Radna temperatura:
-40°C do 60°C

Boje/izvedbe:
- vanjski navoj: PG/metrički
- zatvorena brtva

Svojstva:
- visoka zaštita od izvlačenja kablova
- robustna
- za kablove i vodiče sa velikim vanjskim promjerom
- IP 65 moguć sa ravnom brtvom

Pribor (vidi poglavlje…):
- Matice (3.3)
- Ravne brtve (3.3)

Upotreba:
- montaža armiranih vodiča prema VDE
- kompaktna kabelska uvodnica od mesinga za pouzdanu zaštitu od izvlačenja kablova, čvrsta, za kablove velikih promjera

Material:
- Gland element: nickel-plated brass

Temperature range:
-40°C to 60°C

Colour(s)/Designs:
- External thread: PG/metric
- Sealing ring, punchable

Characteristics:
- high strain relief
- robust
- for cables with large external diameters
- IP 65 possible with flat sealing

Accessories (see chapter…):
- lock nuts (3.3)
- flat sealing (3.3)

Applications:
- Mounting of armoured leads according to VDE
- Compact brass cable gland for reliable strain relief, solid, for large cable diameters

vanjski navoj External thread	Tip Type	brtva za kabel promjera mm Clamping range Sealing mm	zaštita od izvlačenja za kabel promjera mm Clamping range strain relief mm	duljina navoja (E) mm Thread length (E) mm	SW 1 mm SW 1 mm	SW 2 mm SW 2 mm	broj artikla niklani Art. no. nickel-plated	JP kom. PU pcs.
PG / PG								
PG 7	ZEV 607	4,0 - 6,0	6,0 - 9,0	5,0	14,0	17,0	4300009	100
PG 9	ZEV 609	3,5 - 9,0	4,0 - 9,0	6,0	17,0	17,0	4300017	50
PG 11	ZEV 710	3,5 - 11,0	7,0 - 11,0	6,0	20,0	20,0	4300025	50
PG 13,5	ZEV 1014	5,5 - 13,0	10,0 - 13,0	6,5	22,0	22,0	4300033	50
PG 16	ZEV 1015	6,5 - 15,0	10,0 - 15,0	6,5	24,0	24,0	4300041	50
PG 21	ZEV 1418	8,0 - 20,0	13,0 - 20,0	7,0	30,0	30,0	4300050	50
PG 29	ZEV 2027	12,5 - 29,0	20,0 - 29,0	8,0	40,0	40,0	4300068	10
metrički / metric								
M 16 x 1,5	ZEV M 16/9	3,5 - 9,0	4,0 - 9,0	7,0	18,0	17,0	4300116	50
M 20 x 1,5/11	ZEV M 20/11	3,5 - 11,0	7,0 - 11,0	7,0	22,0	20,0	4300120	50
M 20 x 1,5/13,5	ZEV M 20/13,5	5,5 - 13,0	10,0 - 13,0	7,0	22,0	22,0	4300121	50
M 25 x 1,5/16	ZEV M 25/16	6,5 - 15,0	10,0 - 15,0	8,0	27,0	24,0	4300125	50
M 25 x 1,5/21	ZEV M 25/21	8,0 - 20,0	13,0 - 20,0	8,0	32,0	30,0	4300126	50
M 32 x 1,5/21	ZEV M 32/21	8,0 - 20,0	13,0 - 20,0	8,5	34,0	30,0	4300132	50
M 32 x 1,5/29	ZEV M 32/29	12,5 - 29,0	20,0 - 29,0	8,5	40,0	40,0	4300133	10

Uvodnica kabelska tip ZEVB

mesing niklani sa zaštitom od izvlačenja i izvijanja kabela

Cable gland Type ZEVB

nickel-plated brass with strain relief and kink protection

RoHS | IP 55 | EN 50262

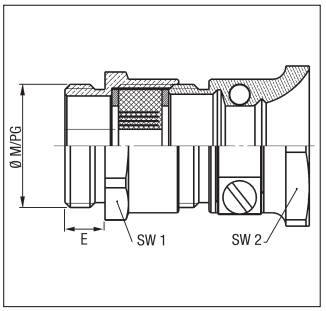

Materijal:
- tijelo kabelske uvodnice: mesing niklani

radna temperatura:
-40°C do 60°C

Boje/izvedbe:
- vanjski navoj: PG/metrički
- zatvorena brtva

Svojstva:
- zaštita od istezanja kabela
- mogućnost spajanja na uzemljenje
- zaštita kablova pri jakom savijanju
- IP 65 moguć sa ravnom brtvom

Pribor (vidi poglavlje…):
- Matice (3.3)
- Ravne brtve (3.3)

Upotreba:
- pokretni dijelovi strojeva
- izrada uređaja

Material:
- Gland element: nickel-plated brass

Temperature range:
-40°C to 60°C

Colour(s)/Designs:
- External thread: PG/metric
- Sealing ring, punchable

Characteristics:
- tension proof grip
- grounding connection possible
- protects strongly bent cables
- IP 65 possible with flat sealing

Accessories (see chapter…):
- lock nuts (3.3)
- flat sealing (3.3)

Applications:
- Mobile machine parts
- Apparatus construction

vanjski navoj External thread	Tip Type	brtva za kabel promjera mm Clamping range Sealing mm	zaštita od izvlačenja za kabel promjera mm Clamping range strain relief mm	duljina navoja (E) mm Thread length (E) mm	SW 1 mm SW 1 mm	SW 2 mm SW 2 mm	broj artikla niklani Art. no. nickel-plated	JP kom. PU pcs.
PG / PG								
PG 9	ZEVB 9	2,0 - 9,0	6,0 - 9,5	6,0	17,0	22,0	4308093	50
PG 11	ZEVB 11	4,0 - 11,0	8,0 - 11,5	6,0	20,0	24,0	4308115	50
PG 13,5	ZEVB 13	4,5 - 12,0	9,0 - 13,0	6,5	22,0	28,0	4308131	50
PG 16	ZEVB 16	5,5 - 14,5	10,0 - 15,0	6,5	24,0	30,0	4308166	25
PG 21	ZEVB 21	8,0 - 19,0	14,0 - 20,0	7,0	30,0	38,0	4308212	25
PG 29	ZEVB 29	12,0 - 27,0	19,0 - 30,0	8,0	40,0	50,0	4308298	10
metrički / metric								
M 16 x 1,5	ZEVB M 16/9	2,0 - 9,0	6,0 - 9,5	7,0	18,0	22,0	4308516	100
M 20 x 1,5	ZEVB M 20/11	4,0 - 11,0	8,0 - 11,5	7,0	22,0	24,0	4308520	100
M 20 x 1,5	ZEVB M 20/13	4,5 - 12,0	9,0 - 13,0	7,0	22,0	28,0	4308521	100
M 25 x 1,5	ZEVB M 25/16	5,5 - 14,5	10,0 - 15,0	8,0	27,0	30,0	4308525	50
M 25 x 1,5	ZEVB M 25/21	8,0 - 18,0	14,0 - 20,0	8,0	32,0	38,0	4308526	25
M 32 x 1,5	ZEVB M 32/21	8,0 - 19,0	14,0 - 20,0	8,5	34,0	38,0	4308532	25
M 32 x 1,5	ZEVB M 32/29	12,0 - 27,0	19,0 - 30,0	8,5	40,0	50,0	4308533	25

Uvodnica kabelska tip ZA

mesing niklani sa centriranom zaštitom od izvlačenja i izvijanja kabela

Cable gland Type ZA

nickel-plated brass with centred strain relief and kink protection

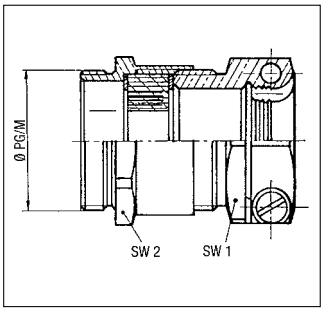

RoHS | IP 55 | EN 50262

Materijal:
- tijelo kabelske uvodnice: mesing niklani
- metrički brtveni prsten: neopren
  PG-brtveni prsten: guma

Radna temperatura
PG: -40°C do 60°C
metrički: -25°C do 100°C

Boje/izvedbe:
- vanjski navoj: PG/metrički
- zatvorena brtva

Svojstva:
- centrirana zaštita od izvlačenja kabela
- bez izvijanja kabela prilikom učvršćenja zaštita od istezanja kabela
- mogućnost spajanja na uzemljenje
- IP 65 moguć sa ravnom brtvom

Pribor (vidi poglavlje…):
- Matice (3.3)
- Ravne brtve (3.3)

Upotreba:
- dvostruka zaštita od izvlačenja kabela za teške uvjete rada
- građevinarstvo
- izrada uređaja
- proizvodnja pogonskih agregata
- Motorenbau

Material:
- Gland element: nickel-plated brass
- Metric-Sealing: Neoprene
  PG-Sealing: Rubber

Temperature range:
PG: -40°C to 60°C
Metric: -25°C to 100°C

Colour(s)/Designs:
- External thread: PG/metric
- Sealing ring, punchable

Characteristics:
- centred strain relief
- no twisted cable while clamping
- tension proof grip
- grounding connection possible
- IP 65 possible with flat sealing

Accessories (see chapter…):
- lock nuts (3.3)
- flat sealing (3.3)

Applications:
- Saddle clamp strain relief gland for raw applications
- Building sites
- Apparatus construction
- Drives

vanjski navoj External thread	Tip Type	brtva za kabel promjera mm Clamping range Sealing mm	zaštita od izvlačenja za kabel promjera mm Clamping range strain relief mm	duljina navoja (E) mm Thread length (E) mm	SW 1 mm SW 1 mm	SW 2 mm SW 2 mm	broj artikla niklani Art. no. nickel-plated	JP kom. PU pcs.
PG / PG								
PG 7	ZA 7	4,0 - 6,0	5,5 - 7,5	5,0	14,0	16,0	4305078	100
PG 9	ZA 9	2,0 - 9,0	6,5 - 9,5	6,0	17,0	19,0	4305094	50
PG 11	ZA 11	4,0 - 11,0	7,5 - 11,5	6,0	20,0	22,0	4305116	50
PG 13,5	ZA 13	4,5 - 12,0	8,5 - 13,5	6,5	22,0	24,0	4305132	50
PG 16	ZA 16	5,5 - 14,5	10,5 - 16,5	6,5	24,0	27,0	4305167	25
PG 21	ZA 21	8,0 - 19,0	12,0 - 20,5	7,0	30,0	33,0	4305213	25
PG 29	ZA 29	12,0 - 27,0	19,0 - 29,5	8,0	40,0	42,0	4305299	10
PG 36	ZA 36	22,0 - 33,0	24,0 - 36,5	9,0	50,0	52,0	4305361	10
PG 42	ZA 42	25,0 - 40,0	33,0 - 42,5	10,0	57,0	60,0	4305426	5
PG 48	ZA 48	30,0 - 45,0	38,0 - 47,5	10,0	64,0	64,0	4305485	5
metrički / metric								
M 12 x 1,5	ZA/M 12	4,0 - 6,0	5,5 - 7,5	7,0	14,0	16,0	4305500	50
M 16 x 1,5	ZA/M 16/02	2,0 - 9,0	6,5 - 9,5	7,0	18,0	19,0	4305501	50
M 16 x 1,5	ZA/M 16/04	4,0 - 11,0	7,5 - 11,5	7,0	20,0	22,0	4305502	50
M 16 x 1,5	ZA/M 16/4,5	4,5 - 12,0	8,5 - 13,5	7,0	22,0	24,0	4305503	50
M 20 x 1,5	ZA/M 20/04	4,0 - 11,0	7,5 - 11,5	7,0	22,0	22,0	4305504	50
M 20 x 1,5	ZA/M 20/4,5	4,5 - 12,0	8,5 - 13,5	7,0	22,0	24,0	4305505	50
M 20 x 1,5	ZA/M 20/5,5	5,5 - 14,5	10,5 - 16,5	7,0	24,0	27,0	4305506	50
M 25 x 1,5	ZA/M 25	5,5 - 14,5	10,5 - 16,5	8,0	27,0	27,0	4305507	20
M 32 x 1,5	ZA/M 32/08	8,0 - 19,0	12,0 - 20,5	8,5	34,0	33,0	4305508	20
M 32 x 1,5	ZA/M 32/12	12,0 - 27,0	19,0 - 29,5	8,5	40,0	42,0	4305509	20
M 40 x 1,5	ZA/M 40	12,0 - 27,0	19,0 - 29,5	8,5	42,0	42,0	4305510	20
M 50 x 1,5	ZA/M 50/22	22,0 - 33,0	24,0 - 36,5	9,5	52,0	52,0	4305511	10
M 50 x 1,5	ZA/M 50/25	25,0 - 40,0	33,0 - 42,5	9,5	58,0	60,0	4305512	10
M 63 x 1,5	ZA/M 63/25	25,0 - 40,0	33,0 - 42,5	10,5	65,0	60,0	4305513	5
M 63 x 1,5	ZA/M 63/30	30,0 - 45,0	36,0 - 47,5	10,5	65,0	64,0	4305514	5
M 75 x 1,5	ZA/M 75	30,0 - 45,0	36,0 - 47,5	11,5	80,0	64,0	4305515	1

Uvodnica kabelska tip SR

mesing niklani sa zaštitom od izvlačenja kabela i nastavkom protiv izvijanja PG-navoj

RoHS | IP 65

Cable gland Type SR

nickel-plated brass with strain relief and kink protection socket PG-thread

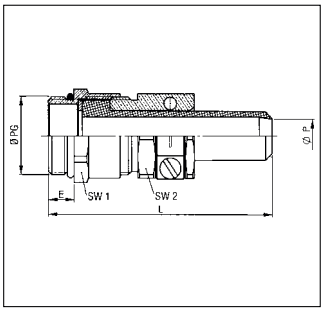

Materijal:
- tijelo kabelske uvodnice: mesing niklani
- nastavak protiv savijanja: neopren
- brtva za vanjski navoj: nitril

Boje/izvedbe:
- vanjski navoj: PG
- sa spojnicom protiv izvlačenja kabela

Svojstva:
- zaštita od izvijanja i kidanja kabela

Pribor (vidi poglavlje…):
- Matice (3.3)

Upotreba:
- pokretni dijelovi strojeva
- pokretne trake i transportni sustavi
- proizvodne linije
- tehnologija mjernih i kontrolnih instrumenata

Material:
- Gland element: nickel-plated brass
- Kink protection socket: Neoprene
- Sealing for External thread: Nitrile

Colour(s)/Designs:
- External thread: PG
- with strain relief clamp

Characteristics:
- protection against kinking and tearing out of cables

Accessories (see chapter…):
- lock nuts (3.3)

Applications:
- Mobile machine parts
- Conveying and transport systems
- Production lines
- Measurement and control technology

vanjski navoj External thread	tip Type	za kabel promjera mm Clamping range mm	duljina navoja (E) mm Thread length (E) mm	Ø P mm Ø P mm	SW 1 mm SW 1 mm	SW 2 mm SW 2 mm	ukupna duljina (L) mm Complete length (L) mm	broj artikla niklani Art. no. nickel-plated	JP kom. PU pcs.
PG 7	SR 7005	3,5 - 5,0	5,0	5,0	14,0	17,0	49,0	4309014	100
PG 9	SR 9007	5,5 - 7,0	6,0	7,0	17,0	17,0	52,0	4309022	100
PG 11	SR 1107	5,5 - 7,0	6,0	7,0	20,0	20,0	53,5	4309030	100
PG 11	SR 1109	7,5 - 9,0	6,0	9,0	20,0	20,0	53,5	4309049	50
PG 13,5	SR 1309	7,5 - 9,0	6,5	9,0	22,0	22,0	60,0	4309057	50
PG 13,5	SR 1311	9,0 - 11,0	6,5	11,0	22,0	22,0	60,0	4309065	50
PG 13,5	SR 1313	10,0 - 12,0	6,5	13,0	22,0	22,0	60,0	4309073	50
PG 16	SR 1613	11,0 - 12,0	6,5	13,0	24,0	24,0	64,0	4309081	50
PG 16	SR 1615	12,0 - 13,5	6,5	15,0	24,0	24,0	64,0	4309090	50
PG 21	SR 2115	13,0 - 14,0	7,0	15,0	30,0	30,0	77,0	4309103	25
PG 21	SR 2117	15,0 - 16,0	7,0	17,0	30,0	30,0	77,0	4309111	25
PG 21	SR 2119	17,0 - 18,0	7,0	19,0	30,0	30,0	77,0	4309120	25
PG 21	SR 2120	17,0 - 19,0	7,0	20,0	30,0	30,0	77,0	4309138	25
PG 29	SR 2920	17,5 - 20,0	8,0	20,0	40,0	40,0	82,0	4309146	25
PG 29	SR 2923	20,0 - 23,0	8,0	23,0	40,0	40,0	82,0	4309154	25
PG 29	SR 2925	22,0 - 25,0	8,0	25,0	40,0	40,0	82,0	4309162	25
PG 36	SR 3626	23,5 - 26,0	9,0	26,0	50,0	50,0	110,0	4309170	10
PG 36	SR 3630	27,0 - 30,0	9,0	30,0	50,0	50,0	110,0	4309189	5
PG 36	SR 3633	30,0 - 33,0	9,0	33,0	50,0	50,0	110,0	4309197	10
PG 36	SR 3635	31,0 - 35,0	9,0	35,0	50,0	50,0	110,0	4309200	10
PG 42	SR 4235	32,0 - 35,0	10,0	35,0	57,0	57,0	112,0	4309219	10
PG 42	SR 4238	34,0 - 38,0	10,0	38,0	57,0	57,0	112,0	4309227	10
PG 42	SR 4240	36,0 - 40,0	10,0	40,0	57,0	57,0	112,0	4309235	10
PG 48	SR 4840	36,0 - 40,0	10,0	40,0	64,0	64,0	118,0	4309243	10
PG 48	SR 4844	39,0 - 44,0	10,0	44,0	64,0	64,0	118,0	4309251	10

Uvodnica kabelska tip SR

mesing niklani sa zaštitom od izvlačenja kabela i nastavkom protiv izvijanja metrički navoj

RoHS | IP 65 | EN 50262

Cable gland Type SR

nickel-plated brass with strain relief and kink protection socket metric thread

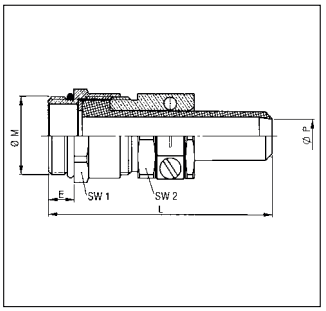

Materijal:
- tijelo kabelske uvodnice: mesing niklani
- nastavak protiv savijanja: neopren
- brtva za vanjski navoj: nitril

Boje/izvedbe:
- vanjski navoj: metrički
- sa spojnicom protiv izvlačenja kabela

Svojstva:
- zaštita od izvijanja i kidanja kabela
- vodonepropusno

Pribor (vidi poglavlje…):
- Matice (3.3)

Upotreba:
- pokretni dijelovi strojeva
- pokretne trake i transportni sustavi
- proizvodne linije
- tehnologija mjernih i kontrolnih instrumenata

Material:
- Gland element: nickel-plated brass
- Kink protection socket: Neoprene
- Sealing for External thread: Nitrile

Colour(s)/Designs:
- External thread: Metric
- with strain relief clamp

Characteristics:
- protection against kinking and tearing out of cables
- watertight

Accessories (see chapter…):
- lock nuts (3.3)

Applications:
- Mobile machine parts
- Conveying and transport systems
- Production lines
- Measurement and control technology

vanjski navoj External thread	tip Type	za kabel promjera mm Clamping range mm	duljina navoja (E) mm Thread length (E) mm	Ø P mm Ø P mm	SW 1 mm SW 1 mm	SW 2 mm SW 2 mm	ukupna duljina (L) mm Complete length (L) mm	broj artikla niklani Art. no. nickel-plated	JP kom. PU pcs.
M 12 x 1,5	SRM 1205	3,5 - 5,0	7,0	5,0	14,0	17,0	51,0	4309300	100
M 16 x 1,5	SRM 1607	5,5 - 7,0	7,0	7,0	17,0	17,0	53,0	4309305	100
M 20 x 1,5	SRM 2007	5,5 - 7,0	7,0	7,0	22,0	20,0	54,5	4309310	100
M 20 x 1,5	SRM 2009	7,5 - 9,0	7,0	9,0	22,0	20,0	54,5	4309311	50
M 20 x 1,5	SRM 2011	9,0 - 11,0	7,0	11,0	22,0	22,0	61,0	4309312	50
M 20 x 1,5	SRM 2013	10,0 - 12,0	7,0	13,0	22,0	22,0	61,0	4309313	50
M 25 x 1,5	SRM 2513	11,0 - 12,0	8,0	13,0	26,0	24,0	65,5	4309315	50
M 25 x 1,5	SRM 2515	12,0 - 13,5	8,0	15,0	26,0	24,0	65,5	4309316	50
M 32 x 1,5	SRM 3215	13,0 - 14,0	8,5	15,0	34,0	30,0	78,5	4309320	25
M 32 x 1,5	SRM 3217	15,0 - 16,0	8,5	17,0	34,0	30,0	78,5	4309321	25
M 32 x 1,5	SRM 3219	17,0 - 18,0	8,5	19,0	34,0	30,0	78,5	4309322	25
M 32 x 1,5	SRM 3220	17,0 - 19,0	8,5	20,0	34,0	30,0	78,5	4309323	25
M 40 x 1,5	SRM 4020	17,5 - 20,0	8,5	20,0	42,0	40,0	82,0	4309325	25
M 40 x 1,5	SRM 4023	20,0 - 23,0	8,5	23,0	42,0	40,0	82,0	4309326	25
M 40 x 1,5	SRM 4025	22,0 - 25,0	8,5	25,0	42,0	40,0	82,0	4309327	25
M 50 x 1,5	SRM 5026	23,5 - 26,0	9,5	26,0	52,0	50,0	110,0	4309330	10
M 50 x 1,5	SRM 5030	27,0 - 30,0	9,5	30,0	52,0	50,0	110,0	4309331	10
M 50 x 1,5	SRM 5033	30,0 - 33,0	9,5	33,0	52,0	50,0	110,0	4309332	10
M 50 x 1,5	SRM 5035	31,0 - 35,0	9,5	35,0	52,0	50,0	110,0	4309333	10
M 63 x 1,5	SRM 6335	32,0 - 35,0	10,5	35,0	64,0	57,0	112,0	4309335	5
M 63 x 1,5	SRM 6338	34,0 - 38,0	10,5	38,0	64,0	57,0	112,0	4309336	5
M 63 x 1,5	SRM 6340	36,0 - 40,0	10,5	40,0	64,0	57,0	112,0	4309337	5

Uvodnica kabelska Syntec/KS

Poliamid
sa zaštitom od izvlačenja i nastavkom protiv izvijanja kabela

Cable gland Syntec/KS

Polyamide
with strain relief and kink protection

RoHS | IP 68 | EN 50262

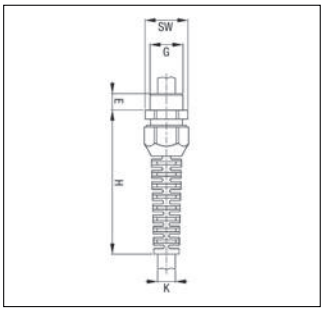

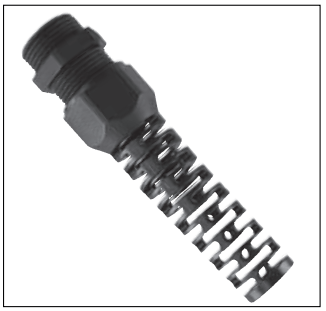

Materijal:
- tijelo kabelske uvodnice: poliamid 6
- brtva: neopren

Radna temperatura
-30°C do 100°C

Boje/izvedbe:
- srebrnosiva, crna
- vanjski navoj: PG/metrički/NPT
- kratki/dugi navoj

Pribor (vidi poglavlje…):
- Matice (3.3)

Upotreba:
- strojevi i uređaji

Material:
- Gland element: Polyamide 6
- Sealing: Neoprene

Temperature range:
-30°C to 100°C

Colour(s)/Designs:
- silver grey, jet black
- External thread: PG/metric/NPT
- short/long thread

Accessories (see chapter…):
- lock nuts (3.3)

Applications:
- Machines and devices

vanjski navoj (G) External thread (G)	tip Type	za kabel promjera (K) mm Clamping range (K) mm	E mm E mm	SW mm SW mm	H mm H mm	broj artikla srebrnosiva RAL 7001 Art. no. silver grey RAL 7001	broj artikla crna RAL 9005 Art. no. jet black RAL 9005	JP kom. PU pcs.
PG / PG								
PG 7	Syntec/KS	2,5 - 6,5	8,0	15,0	54,0	5306007	5306107	50
PG 9	Syntec/KS	3,0 - 8,0	8,0	19,0	64,0	5306009	5306109	50
PG 11/1	Syntec/KS	4,0 - 10,0	8,0	22,0	77,0	5306011	5306111	50
PG 11/2	Syntec/KS	2,0 - 7,0	8,0	22,0	77,0	5306012	5306112	50
PG 13/1	Syntec/KS	5,5 - 12,0	9,0	24,0	88,0	5306013	5306113	50
PG 13/2	Syntec/KS	3,0 - 7,0	9,0	24,0	88,0	5306014	5306114	50
PG 16/1	Syntec/KS	8,5 - 14,0	10,0	27,0	102,0	5306016	5306116	25
PG 16/2	Syntec/KS	5,0 - 11,0	10,0	27,0	102,0	5306017	5306117	25
metrički, kratki navoj / metric, short thread								
M 12 x 1,5/K/6,5	Syntec/KS	2,5 - 6,5	6,0	15,0	54,0	5306030	5306130	50
M 16 x 1,5/K/8	Syntec/KS	4,0 - 8,0	6,0	19,0	64,0	5306031	5306131	50
M 20 x 1,5/K/7	Syntec/KS	3,0 - 7,0	8,0	24,0	88,0	5306032	5306132	50
M 20 x 1,5/K/12	Syntec/KS	5,5 - 12,0	8,0	24,0	88,0	5306033	5306133	50
metrički, dugi navoj / metric, long thread								
M 12 x 1,5/L/6,5	Syntec/KS	2,5 - 6,5	12,0	15,0	54,0	5306040	5306140	50
M 16 x 1,5/L/8	Syntec/KS	4,0 - 8,0	12,0	19,0	64,0	5306041	5306141	50
M 20 x 1,5/L/7	Syntec/KS	3,0 - 7,0	13,0	24,0	88,0	5306042	5306142	50
M 20 x 1,5/L/12	Syntec/KS	5,5 - 12,0	13,0	24,0	88,0	5306043	5306143	50
NPT / NPT								
NPT 3/8"/8	Syntec/KS	3,0 - 8,0	15,0	19,0/22,0	64,0	5306050	5306150	50
NPT 1/2"/7	Syntec/KS	3,0 - 7,0	15,0	24,0	88,0	5306051	5306151	50
NPT 1/2"/12	Syntec/KS	5,5 - 12,0	15,0	24,0	88,0	5306052	5306152	50

Uvodnica kabelska konusna

polistiren
prema „starom“ DIN 46320
PG-navoj

Conus-Cable gland

Polystyrene
acc. to „old“ DIN 46320
PG-thread

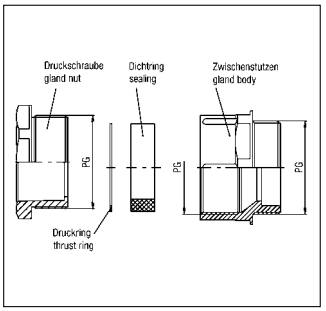

RoHS | IP 54

Materijal:
- tijelo kabelske uvodnice: polistiren

Boje/izvedbe:
- svjetlosiva
- vanjski navoj: PG
- kratki/dugi navoj
- šesterokutna

Pribor (vidi poglavlje…):
- Matice (3.3)

Upotreba:
- za primjenu u području instalacija bez posebnih zahtjeva

Material:
- Gland element: Polystyrene

Colour(s)/Designs:
- light grey
- External thread: PG
- short/long thread
- with hexagon base

Accessories (see chapter…):
- lock nuts (3.3)

Applications:
- for application in installation sectors without special requirements

vanjski navoj External thread	tip Type	za kabel Ø mm for cable Ø mm	broj artikla svjetlosiva RAL 7035 Art. no. light grey RAL 7035	JP kom. PU pcs.
kratki navoj / short thread				
PG 7	307PG	3,5 - 6,0	5202078	50
PG 9	309PG	4,5 - 7,0	5202094	50
PG 11	311PG	6,0 - 9,0	5202116	50
PG 13,5	313PG	9,0 - 12,0	5202132	50
PG 16	316PG	11,0 - 14,0	5202167	50
PG 21	321PG	14,0 - 18,0	5202213	25
PG 29	329PG	18,0 - 25,0	5202299	10
PG 36	336PG	25,0 - 32,0	5202361	10
PG 42	342PG	30,0 - 38,0	5202434	10
PG 48	348PG	36,0 - 44,0	5202485	10
dugi navoj / long thread				
PG 9	309PGL	4,5 - 7,0	5202590	50
PG 11	311PGL	6,0 - 9,0	5202604	50
PG 13,5	313PGL	9,0 - 12,0	5202507	50
PG 16	316PGL	11,0 - 14,0	5202515	25
PG 21	321PGL	14,0 - 18,0	5202612	25
PG 29	329PGL	18,0 - 25,0	5202620	10
PG 36	336PGL	25,0 - 32,0	5202418	10
PG 42	342PGL	30,0 - 38,0	5202426	10

Uvodnica kabelska konusna
poliamid
metrički navoj

Conus-Cable gland
Polyamide
metric thread

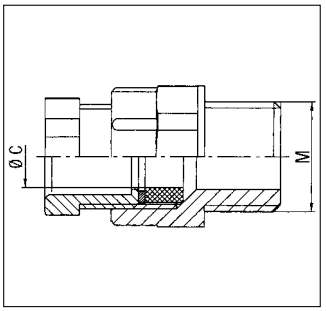

3.1

RoHS | IP 54 | EN 50262

Materijal:
- tijelo kabelske uvodnice: poliamid

Boje/izvedbe:
- svjetlosiva
- vanjski navoj: metrički
- šesterokutna
- * sa višeslojnom brtvom

Pribor (vidi poglavlje…):
- Matice (3.3)

Upotreba:
- za primjenu u području instalacija bez posebnih zahtjeva

Material:
- Gland element: Polyamide

Colour(s)/Designs:
- light grey
- External thread: metric
- with hexagon base
- * with punchable sealing ring

Accessories (see chapter…):
- lock nuts (3.3)

Applications:
- for application in installation sectors without special requirements

vanjski navoj External thread	za kabel (C) Ø mm for cable (C) Ø mm	broj artikla svjetlosiva RAL 7035 Art. no. light grey RAL 7035	JP kom. PU pcs.
M 12 x 1,5/PG 9	6,0 - 8,0	5203112	50
M 16 x 1,5/PG 9	6,0 - 8,0	5203116	50
M 20 x 1,5/PG 11	8,0 - 10,0	5203120	50
M 20 x 1,5/PG 13,5	10,0 - 12,0	5203121	50
M 25 x 1,5/PG 16	12,0 - 14,0	5203125	50
M 25 x 1,5/PG 21	15,0 - 17,0	5203126	50
M 32 x 1,5/PG 21	15,0 - 17,0	5203132	25
M 32 x 1,5/PG 29*	17,0 - 26,0	5203133	25
M 40 x 1,5/PG 29	24,0 - 26,0	5203140	10
M 50 x 1,5/PG 36*	23,0 - 34,0	5203150	10
M 50 x 1,5/PG 42	38,0 - 40,0	5203151	10
M 63 x 1,5/PG 48*	35,0 - 45,0	5203163	10

Uvodnica kabelska
mesing niklani
sa šesterokutnim središnjim dijelom prema „starom“ DIN 46320
PG-navoj, kratki

Cable gland
nickel-plated brass
with hexagon intermediate part acc. to „old“ DIN 46320
PG-thread, short

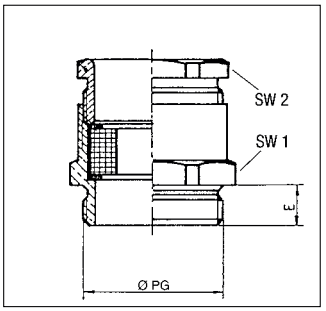

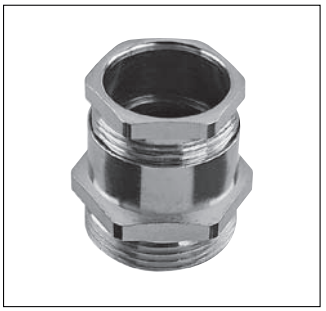

RoHS | IP 65

Materijal:
- tijelo kabelske uvodnice: mesing niklani

Boje/izvedbe:
- vanjski navoj: PG
- kratki navoj
- obična ili višeslojna brtva
- raspoloživa s dugim navojem na upit

Pribor (vidi poglavlje…):
- Matice (3.3)

Upotreba:
- za primjenu u području instalacija bez posebnih zahtjeva

Material:
- Gland element: nickel-plated brass

Colour(s)/Designs:
- External thread: PG
- short thread
- simple sealing ring
- punchable sealing ring
- Available with long External thread on request

Accessories (see chapter…):
- lock nuts (3.3)

Applications:
- for Application in installation sectors without special requirements

vanjski navoj External thread	za kabel Ø mm for cable Ø mm	duljina navoja (E) mm Thread length (E) mm	SW 1 mm SW 1 mm	SW 2 mm SW 2 mm	dimenzije višeslojne brtve mm graded dimensions for sealing ring mm	broj artikla niklani Art. no. nickel-plated	JP kom. PU pcs.
kratki navoj / short thread - obična brtva / simple sealing ring							
PG 7	5,0 - 7,0	5,0	14,0	13,0	-	4001001	100
PG 9	6,0 - 8,0	6,0	17,0	15,0	-	4001109	50
PG 11	8,0 - 10,0	6,0	20,0	18,0	-	4001206	50
PG 13,5	10,0 - 12,0	6,5	22,0	20,0	-	4001303	50
PG 16	12,0 - 14,0	6,5	24,0	22,0	-	4001400	25
PG 21	15,0 - 17,0	7,0	30,0	28,0	-	4001508	25
PG 29	24,0 - 26,0	8,0	40,0	37,0	-	4001559	10
PG 36	31,0 - 33,0	9,0	50,0	47,0	-	4001605	10
PG 42	39,0 - 41,0	10,0	57,0	54,0	-	4001656	5
PG 48	44,0 - 46,0	10,0	64,0	60,0	-	4001702	5
kratki navoj / short thread - višeslojna brtva / punchable sealing ring							
PG 9	2,0 - 9,0	6,0	17,0	15,0	5,0 - 7,5 - 10,0	4009100	50
PG 11	4,0 - 11,0	6,0	20,0	18,0	5,0 - 7,5 - 10,0	4009207	50
PG 13,5	4,5 - 12,0	6,5	22,0	20,0	7,5 - 10,0 - 12,5	4009304	50
PG 16	5,5 - 14,5	6,5	24,0	22,0	7,5 - 10,0 - 12,0 - 15,0	4009401	25
PG 21	8,0 - 19,0	7,0	30,0	28,0	10,0 - 13,0 - 16,0 - 19,0	4009509	25
PG 29	12,0 - 27,0	8,0	40,0	37,0	18,0 - 21,0 - 24,0 - 27,0	4009550	10
PG 36	22,0 - 33,0	9,0	50,0	47,0	24,0 - 27,0 - 30,0 - 33,0	4009606	10
PG 42	25,0 - 40,0	10,0	57,0	54,0	30,0 - 33,0 - 36,0 - 39,0	4009658	5
PG 48	30,0 - 45,0	10,0	64,0	60,0	36,0 - 39,0 - 42,0 - 45,0	4009695	5

Uvodnica kabelska

mesing niklani
sa šesterokutnim središnjim dijelom
metrički navoj, kratki
pritisni vijak s PG-navojem

Cable gland

nickel-plated brass
with hexagon intermediate part
metric thread, short
Pressure screw with PG-thread

RoHS | IP 65 | EN 50262

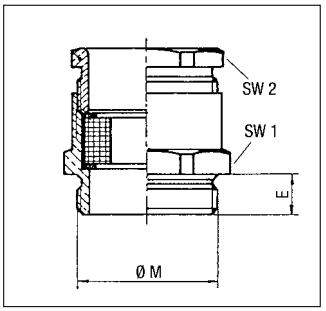

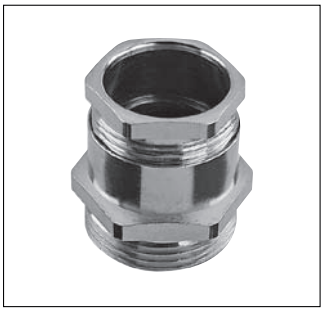

Materijal:
- tijelo kabelske uvodnice: mesing niklani
- obična brtva: guma
- višeslojna brtva: neopren

Radna temperatura:
guma: -40°C do 60°C
neopren: -25°C do 100°C

Boje/izvedbe:
- vanjski navoj: metrički
- kratki navoj
- obična ili višeslojna brtva

- pritisni vijak s PG navojem
- raspoloživa s dugim navojem na upit

Pribor (vidi poglavlje…):
- Matice (3.3)

Upotreba:
- za primjenu u području instalacija bez posebnih zahtjeva

Material:
- Gland element: nickel-plated brass
- Simple sealing ring: Rubber
- Punchable sealing ring: Neoprene

Temperature range:
Rubber: -40°C to 60°C
Neoprene: -25°C to 100°C

Colour(s)/Designs:
- External thread: metric
- short thread
- simple sealing ring
- punchable sealing ring

- pressure screw with PG thread
- Available with long External thread on request

Accessories (see chapter…):
- lock nuts (3.3)

Applications:
- for Application in installation sectors without special requirements

vanjski navoj External thread	za kabel Ø mm for cable Ø mm	duljina navoja (E) mm Thread length (E) mm	SW 1 mm SW 1 mm	SW 2 mm SW 2 mm	dimenzije višeslojne brtve mm graded dimensions for sealing ring mm	broj artikla niklani Art. no. nickel-plated	JP kom. PU pcs.
kratki navoj / short thread - obična brtva / simple sealing ring							
M 12 x 1,5	5,0 - 7,0	7,0	14,0	13,0	-	4103312	50
M 12 x 1,5	6,0 - 8,0	7,0	17,0	15,0	-	4103313	50
M 16 x 1,5	6,0 - 8,0	7,0	18,0	15,0	-	4103316	50
M 16 x 1,5	8,0 - 10,0	7,0	20,0	18,0	-	4103317	50
M 20 x 1,5	8,0 - 10,0	7,0	22,0	18,0	-	4103320	50
M 20 x 1,5	10,0 - 12,0	7,0	22,0	20,0	-	4103321	25
M 25 x 1,5	12,0 - 14,0	8,0	27,0	22,0	-	4103325	25
M 25 x 1,5	15,0 - 17,0	8,0	32,0	28,0	-	4103326	25
M 32 x 1,5	15,0 - 17,0	8,5	34,0	28,0	-	4103332	25
M 32 x 1,5	24,0 - 26,0	8,5	40,0	37,0	-	4103333	25
M 40 x 1,5	24,0 - 26,0	8,5	42,0	37,0	-	4103340	10
M 40 x 1,5	28,0 - 30,0	8,5	50,0	47,0	-	4103341	10
M 50 x 1,5	31,0 - 33,0	9,5	52,0	47,0	-	4103350	10
M 50 x 1,5	39,0 - 41,0	9,5	58,0	54,0	-	4103351	10
M 63 x 1,5	39,0 - 41,0	10,5	65,0	54,0	-	4103363	5
M 63 x 1,5	45,0 - 47,0	10,5	65,0	60,0	-	4103364	5
kratki navoj / short thread - višeslojna brtva / punchable sealing ring							
M 12 x 1,5	4,0 - 6,0	7,0	14,0	13,0	4,0 - 5,0 - 6,0	4103512	50
M 16 x 1,5	4,0 - 9,5	7,0	18,0	15,0	5,0 - 7,5 - 10,0	4103516	50
M 20 x 1,5	4,0 - 11,5	7,0	22,0	18,0	5,0 - 7,5 - 10,0 - 12,0	4103520	50
M 20 x 1,5	6,0 - 13,0	7,0	22,0	20,0	7,5 - 10,0 - 12,5	4103521	25
M 25 x 1,5	6,0 - 15,0	8,0	27,0	22,0	7,5 - 10,0 - 12,0 - 15,0	4103525	25
M 32 x 1,5	9,0 - 20,0	8,5	34,0	28,0	10,0 - 13,0 - 16,0 - 19,0	4103532	25
M 40 x 1,5	15,0 - 27,0	8,5	42,0	37,0	18,0 - 21,0 - 24,0 - 27,0	4103540	10
M 50 x 1,5	21,0 - 33,0	9,5	52,0	47,0	24,0 - 27,0 - 30,0 - 33,0	4103550	5
M 63 x 1,5	27,0 - 40,0	10,5	65,0	54,0	30,0 - 33,0 - 36,0 - 39,0	4103563	5

Mon.Za alat za montažu kabelskih uvodnica

Mon.Za mounting tool for cable glands

Svojstva:
- moguće samopodešavanje širina ili fiksiranje na određenu širinu
- zaporna funkcija

Characteristics:
- Self adjusting of widths across flat or Fixing of widths across flat possible
- Ratchet function

za SW for SW	broj artikla Art. no.	JP kom. PU pcs.
13,0 - 23,0 mm	9000020	1
24,0 - 36,0 mm	9000025	1

Set od 2 kom u kovčegu / 2 pcs. Set with case 13,0 - 23,0 mm i / and 24,0 - 36,0 mm	9000030	1

3.1

EMC-kabelske uvodnice

EMC-Cable glands

	stranica		page
EMC-kabelska uvodnica SCHLEMMER-TEC		EMC-Cable gland SCHLEMMER-TEC	
PROFI	54	PROFI	54
PLUS	55	PLUS	55
EMC-kabelska uvodnica WADI-TEC	56	EMC-Cable gland WADI-TEC	56
Pribor EMC		Accessories EMC	
Pločica za uzemljenje	57	Grounding Strip	57

EMC-kabelska uvodnica SCHLEMMER-TEC PROFI

mesing niklani
metrički navoj, kratki

RoHS | IP 68 | EN 50262

EMC-Cable gland SCHLEMMER-TEC PROFI

nickel-plated brass
metric thread, short

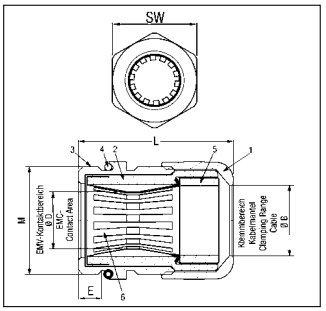

Materijal:
- 1/3: tijelo kabelske uvodnice: mesing niklani
- 2: stezni prsten: poliamid 6
- 4: brtveni prsten za vanjski navoj: nitril
- 5: brtva: neopren
- 6: čelični opružni kavez

Radna temperatura:
-40°C do 100°C

Boje/izvedbe:
- vanjski navoj: metrički
- kratki navoj

Svojstva:
- **patentiirani** 360° kružni spoj
- bez oštećenja ekraniziranog omotača
- idealno za međuspajanje
- nepropusnost za vodu i plinove
- potpuno zaštićeno od okretanja
- maksimalna zaštita od izvlačenja kabela

Pribor (vidi poglavlje…):
- Pločica za uzemljenje (3.2)
- Matice (3.3)

Upotreba:
- izrada strojeva i aparata
- tehnologija mjernih i kontrolnih instrumenata
- instalacije u proizvodnim postrojenjima
- telekomunikacije
- hibridna električna vozila
- medicinska tehnika
- frekventni pretvarači
- zračne luke

Material:
- 1/3: Gland element: nickel-plated brass
- 2: Clamping shell: Polyamide 6
- 4: Sealing-Ring for External thread: Nitrile
- 5: Sealing: Neoprene
- 6: Spring Steel Cage

Temperature range:
-40°C to 100°C

Colour(s)/Designs:
- External thread: metric
- short thread

Characteristics:
- **patented** 360° circular connection
- No breach of th braided shield
- Also ideal for intermediate contacting
- gas and water-tight
- completely twist protected
- maximum strain relief through clamp lamella

Accessories (see chapter…):
- Grounding Strip (3.2)
- lock nuts (3.3)

Applications:
- Machines and apparatus construction
- Measuring and control engineering
- Plant installations
- Tele communication
- Hybrid electric vehicle
- Medical technology
- Frequency converters
- Airports

3.2

vanjski navoj External thread	kontakt promjera Ø D mm Contact range Ø D mm	za kabel promjera Ø B mm Clamping range cable Ø B mm	SW mm SW mm	L mm L mm	E mm E mm	broj artikla niklani Art. no. nickel-plated	JP kom. PU pcs.
M 16 x 1,5	5,0- 9,5	6,0- 9,5	17,0	28,0	5,0	4264416	50
M 20 x 1,5	8,0-13,0	9,0-13,0	22,0	32,0	6,0	4264420	50
M 25 x 1,5	9,0-15,0	10,0-16,0	27,0	35,0	7,0	4264425	25
M 32 x 1,5	12,0-21,0	13,0-21,0	34,0	38,0	8,0	4264432	20
M 40 x 1,5	17,5-27,0	18,5-27,0	42,0	41,0	8,0	4264440	10
M 50 x 1,5	25,0-35,0	26,0-35,0	55,0	46,0	9,0	4264450	5
M 63 x 1,5	37,0-48,0	38,0-48,0	65,0	54,0	10,0	4264463	5

Montaža / Assembly

1. Skinuti vanjsku izolaciju kabela 10-15 mm ovisno o veličini.
1. Dismantle Cable 10-15 mm according to size

2. Montiranje kabelske uvodnice na kabel.
2. Assembling Cable Gland with Cable

3. Zatezanje glave uvodnice steže čelični opružni kavez i dovodi čelične kontakte u dodir sa ekranizirajućim omotačem. Time postižemo patentirani 360° kružni spoj i optimalno odvođenje elektromagnetskih valova.
3. Screwing the Dome nut is compressing the Spring Steel Cage and brings the Steel Contacts gentle onto screen. Hence we achieve a **patented** 360° (circular) connection and optimum EMC derivation.

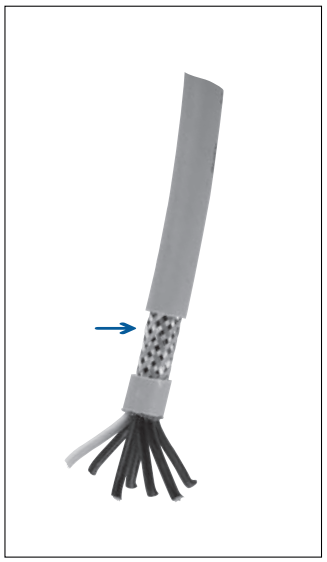

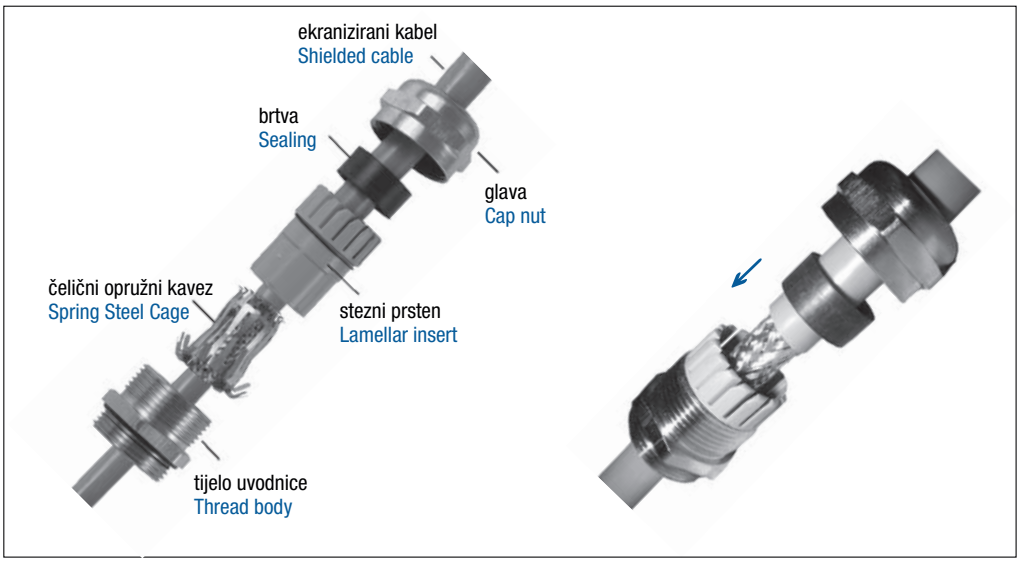

Kabelska uvodnica SCHLEMMER-TEC PLUS

mesing niklani
EMC-standardna izvedba
metrički navoj

Cable gland SCHLEMMER-TEC PLUS

nickel-plated brass
EMC-Standardversion
metric thread

RoHS | IP 68 | EN 50262

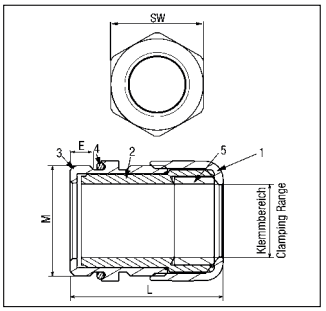

Materijal:
- 1/3: tijelo kabelske uvodnice: mesing niklani
- 2: stezni prsten: poliamid 6
- 4: brtveni prsten za vanjski navoj: nitril
- 5: brtva: neopren

Radna temperatura:
-40°C do 100°C

Boje/izvedbe:
- vanjski navoj: metrički
- kratki/dugi navoj

Svojstva:
- jednostavan spoj ekrana kabela plastičnim steznim prstenom
- maksimalna zaštita od izvlačenja kabela
- nepropusnost za vodu i plinove

Pribor (vidi poglavlje…):
- Pločica za uzemljenje (3.2)
- Matice (3.3)

Upotreba:
- izrada strojeva i aparata
- tehnologija mjernih i kontrolnih instrumenata
- instalacije u proizvodnim postrojenjima
- telekomunikacije

Material:
- 1/3: Gland element: nickel-plated brass
- 2: Clamping shell: Polyamide 6
- 4: Sealing-Ring for External thread: Nitrile
- 5: Sealing: Neoprene

Temperature range:
-40°C to 100°C

Colour(s)/Designs:
- External thread: metric
- short/long thread

Characteristics:
- Simple Connection of braided screen with plastic lamellar insert
- maximum strain relief through clamp lamella
- gas and water-tight

Accessories (see chapter…):
- Grounding Strip (3.2)
- lock nuts (3.3)

Applications:
- Machines and apparatus construction
- Measuring and control engineering
- Plant installations
- Telecommunication

3.2

vanjski navoj External thread	promjer kabela mm Clamping range mm	duljina navoja (E) mm Thread length (E) mm	ukupna duljina (L) mm Complete length (L) mm	SW mm SW mm	broj artikla niklani Art. no. nickel-plated	JP kom. PU pcs.
kratki navoj / short thread						
M 12 x 1,5	4,5 - 6,5	5,0	25,0	14,0	4220950	50
M 16 x 1,5	5,0 - 9,5	5,0	28,0	17,0	4220951	50
M 20 x 1,5	8,0 - 13,0	6,0	32,0	22,0	4220952	50
M 25 x 1,5	9,0 - 16,0	7,0	35,0	27,0	4220953	25
M 32 x 1,5	12,0 - 21,0	8,0	38,0	34,0	4220954	20
M 40 x 1,5	16,0 - 27,0	8,0	41,0	42,0	4220955	10
M 50 x 1,5	23,0 - 35,0	9,0	46,0	55,0	4220956	5
M 63 x 1,5	36,0 - 48,0	10,0	54,0	65,0	4220957	5
dugi navoj / long thread						
M 12 x 1,5	4,5 - 6,5	15,0	35,0	14,0	4220958	100
M 16 x 1,5	5,0 - 9,5	15,0	38,0	17,0	4220959	50
M 20 x 1,5	8,0 - 13,0	15,0	41,0	22,0	4220960	50
M 25 x 1,5	9,0 - 16,0	15,0	43,0	27,0	4220961	25
M 32 x 1,5	12,0 - 21,0	15,0	45,0	34,0	4220962	20
M 40 x 1,5	16,0 - 27,0	15,0	48,0	42,0	4220963	10
M 50 x 1,5	23,0 - 35,0	15,0	52,0	55,0	4220964	5
M 63 x 1,5	36,0 - 48,0	15,0	59,0	65,0	4220965	5

Montaža / Assembly

1. Skinuti vanjsku izolaciju kabela 10-15 mm ovisno o veličini uvodnice.
1. Dismantle Cable 10 - 15 mm acc. to Gland size.

2. pomaknite glavu uvodnice i stezni prsten uzduž kabla.
2. Suspend Cap nut and Lamellar insert Sealing upon cable.

3. Ekranizirani omotač zaokrenite unatrag.
3. Upend the braided screen.

4. Gurnite tijelo uvodnice na ekranizirani omotač.
4. Push Thread body to the braided screen.

5. Utisnite stezni prsten sa brtvom u tijelo uvodnice - zokrenite i učvrstite.
5. Push in Lamellar insert with sealing into the thread body - twist and snap.

6. Zategnite glavu uvodnice.
6. Screw cap nut.

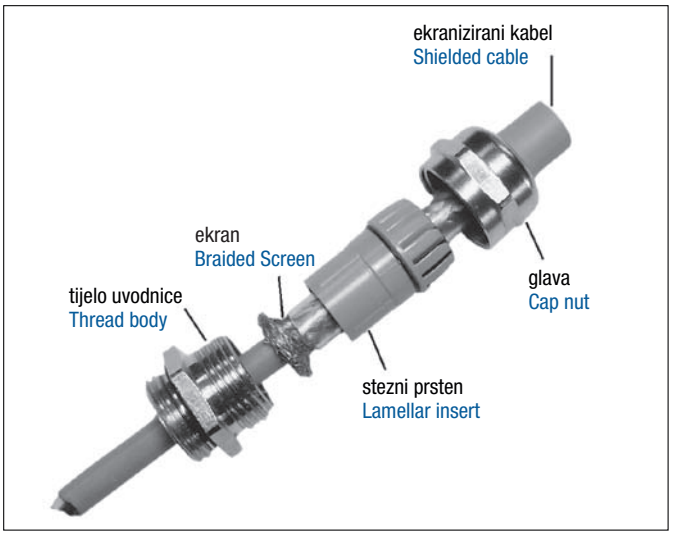

EMC-
kabelska uvodnica
WADI-TEC
mesing niklani
PG-/metrički

EMC-
Cable gland
WADI-TEC
nickel-plated brass
PG-/metric thread

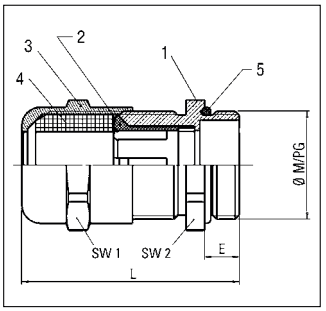

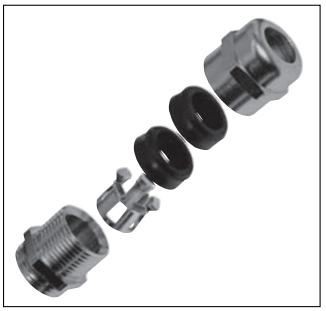

RoHS | IP 68 | EN 50262

Materijal:
- 1/3: tijelo kabelske uvodnice/ glava: mesing niklani
- 2: stezni prsten za EMC: pokositrena plastika
- 4: brtva: tefabloc
- 5: brtva za vanjski navoj: nitril

Radna temperatura:
-25°C do 120°C

Boje/izvedbe:
- vanjski navoj: PG/metrički
- kratki/dugi navoj

Napomena:
upute za montažu na web stranici - www.schlemmer.com

Svojstva:
- kontinuirana elektromagnetska zaštita pomoću pokositrenog steznog prstena
- nepropusnost za vodu i plinove
- potpuno zaštićeno od okretanja

Pribor (vidi poglavlje…):
- Pločica za uzemljenje (3.2)
- Matice (3.3)

Upotreba:
- izrada strojeva i aparata
- tehnologija mjernih i kontrolnih instrumenata
- instalacije u proizvodnim postrojenjima
- telekomunikacije

Material:
- 1/3: Gland element/Cap nut: nickel-plated brass
- 2: Clamping-Ring for EMC: tin-plated plastic
- 4: Sealing: Tefabloc
- 5: Sealing for External thread: Nitrile

Temperature range:
-25°C to 120°C

Colour(s)/Designs:
- External thread: PG/metric
- short/long thread

Note:
Assembly Instruction see Homepage www.schlemmer.com

Characteristics:
- continuous EMC protection due to tin-plated clamping ring
- gas and water-tight
- completely twist protected

Accessories (see chapter…):
- Grounding Strip (3.2)
- lock nuts (3.3)

Applications:
- Machines and apparatus construction
- Measuring and control engineering
- Plant installations
- Telecommunication

3.2

vanjski navoj External thread	promjer kabela mm Clamping range for cable mm	promjer ekranizirajućeg omotača mm min. Clamping range for screening mm min.	duljina navoja (E) mm Thread length (E) mm	SW 1 mm SW 1 mm	SW 2 mm SW 2 mm	broj artikla niklani Art. no. nickel-plated	JP kom. PU pcs.
PG, kratki navoj / PG, short thread							
PG 7	4,0 - 6,5	4,0	5,0	14,0	14,0	4264007	100
PG 9	5,0 - 8,5	4,5	6,0	17,0	17,0	4264009	50
PG 11	7,0 - 10,5	6,0	6,0	20,0	20,0	4264011	50
PG 13,5	8,0 - 12,5	8,0	6,5	22,0	22,0	4264013	50
PG 16	10,0 - 14,5	10,0	6,5	24,0	24,0	4264016	20
PG 21	13,5 - 18,0	13,5	7,0	30,0	30,0	4264021	25
PG 29	17,0 - 24,0	17,0	8,0	40,0	40,0	4264029	10
PG 36	24,0 - 30,0	24,0	9,0	50,0	50,0	4264036	10
metrički, kratki navoj / metric, short thread							
M 12 x 1,5/7	4,0 - 6,5	4,0	7,0	14,0	14,0	4264112	100
M 16 x 1,5/7	4,0 - 6,5	4,0	7,0	14,0	17,0	4264116	100
M 16 x 1,5/9	5,0 - 8,5	4,5	7,0	17,0	17,0	4264117	50
M 20 x 1,5/11	7,0 - 10,5	6,0	7,0	20,0	22,0	4264120	50
M 20 x 1,5/13	8,0 - 12,5	8,0	7,0	22,0	22,0	4264121	50
M 25 x 1,5/16	10,0 - 14,5	10,0	8,0	24,0	26,0	4264125	25
M 25 x 1,5/21	13,5 - 18,0	13,5	8,0	30,0	30,0	4264126	25
M 32 x 1,5/21	13,5 - 18,0	13,5	8,5	30,0	33,0	4264132	10
M 32 x 1,5/29	17,0 - 24,0	17,0	8,5	40,0	40,0	4264133	10
M 40 x 1,5/29	17,0 - 24,0	17,0	8,5	40,0	42,0	4264134	10
M 40 x 1,5/36	24,0 - 30,0	24,0	8,5	50,0	50,0	4264135	10
metrički, dugi navoj / metric, long thread							
M 16 x 1,5/9	5,0 - 8,5	4,5	13,0	17,0	17,0	4264217	50
M 20 x 1,5/13	8,0 - 12,5	8,0	13,0	22,0	22,0	4264221	50
M 25 x 1,5/21	13,5 - 18,0	13,5	14,0	30,0	30,0	4264226	25
M 32 x 1,5/29	17,0 - 24,0	17,0	14,5	40,0	40,0	4264232	10
M 40 x 1,5/29	17,0 - 24,0	17,0	14,5	40,0	42,0	4264240	10
M 40 x 1,5/36	24,0 - 30,0	24,0	14,5	50,0	50,0	4264241	10

Pribor EMC
Pločica za uzemljenje
mesing

Accessories EMC
Grounding Strip
brass blank

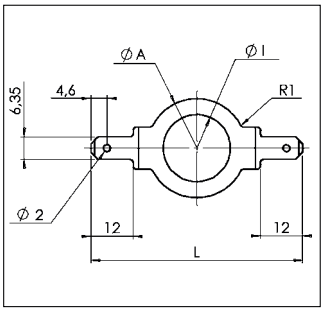

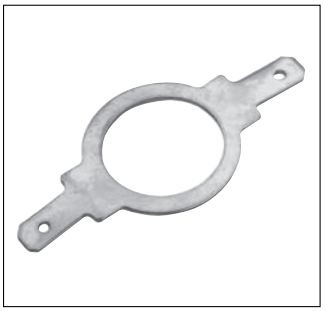

RoHS

Materijal:
mesing

Boje/izvedbe:
- vanjski navoj: PG/metrički/plinski

Svojstva:
- kontakti za lemljenje i naticanje
- pločica za uzemljenje se postavlja na spojni navoj i učvršćuje maticom
- za ravni konektor 6,35 mm x 0,8 mm

Upotreba:
- uzemljenje spojnog navoja u plastičnim kućištima

Material:
brass blank

Colour(s)/Designs:
- Connecting thread: PG/metric/Gas

Characteristics:
- Connections solderable/stuckable
- Grounding strip is placed on the connecting thread and fixed by lock nut
- for flat connector 6,35 mm x 0,8 mm

Applications:
- Grounding connection for connecting thread in plastic housing

3.2

spojni navoj PG Connecting thread PG	spojni navoj metrički Connecting thread metric	spojni navoj plinski Connecting thread Gas	vanjski promjer (A) mm External Diameter (A) mm	unutarnji-promjer (I) mm Internal Diameter (I) mm	broj artikla blank Art. no. blank	JP kom. PU pcs.
PG 7	M 12	1/4"	24,0	13,0	8101078	slobodno / loose
PG 9			24,0	16,0	8101094	slobodno / loose
	M 16	3/8"	24,0	16,5	8101516	slobodno / loose
PG 11			28,0	19,0	8101116	slobodno / loose
	M 20		28,0	20,5	8101520	slobodno / loose
PG 13,5		1/2"	28,0	21,0	8101132	slobodno / loose
PG 16		5/8"	32,0	23,0	8101167	slobodno / loose
	M 25		32,0	25,5	8101525	slobodno / loose
PG 21		3/4"	37,0	29,0	8101213	slobodno / loose
	M 32	1"	40,0	33,0	8101532	slobodno / loose
PG 29		1 1/8"	52,0	38,0	8101299	slobodno / loose
	M 40		52,0	40,5	8101540	slobodno / loose
PG 36		1 1/2"	62,0	48,0	8101361	slobodno / loose
	M 50		62,0	50,5	8101550	slobodno / loose
PG 42		1 3/4"	71,0	55,0	8101421	slobodno / loose
PG 48		2"	78,0	61,0	8101485	slobodno / loose
	M 63		78,0	63,5	8101563	slobodno / loose

3.2

Pribor

	stranica
Matice	
plastika PA	60
mesing niklani	61 - 63
nehrđajući čelik	64
Redukcije	
plastika PC	65
plastika PA	66 - 67
mesing niklani	68 - 72
Proširenja	
plastika PA	73
mesing niklani	74 - 75
Međukomadi	76 - 79
Pritisni vijci	80 - 83
Čepovi	
plastika PC	84
plastika PA	85
mesing niklani	86 - 88
Prirubnice kutne 90°	
plastika PA	89
metal	90
Koljeno 90°	91
Brtveni čep	92
O-brtva	93
Brtva plosnata	94
Brtve	95 - 96
Pritisni prsten	97
Brtveni prsten za spojne navoje	98
Brtva slijepa	99

Accessories

	page
Lock nuts	
Plastic PA	60
Nickel-plated brass	61 - 63
Stainless steel	64
Reducers	
Plastic PC	65
Plastic PA	66 - 67
Nickel-plated brass	68 - 72
Enlargers	
Plastic PA	73
Nickel-plated brass	74 - 75
Intermediate Parts	76 - 79
Pressure Screws	80 - 83
Plugs	
Plastic PC	84
Plastic PA	85
Nickel-plated brass	86 - 88
Flange angle 90°	
Plastic PA	89
Zinc	90
Elbow 90°	91
Plug Sealing clamp	92
O-rings	93
Flat sealings	94
Sealing Rings	95 - 96
Pressure Rings	97
Packing Ring for connection thread	98
Dummy Discs	99

Matica
poliamid
PG-/metrički/NPT-navoj

Lock nuts
Polyamide
PG-/metric//NPT-thread

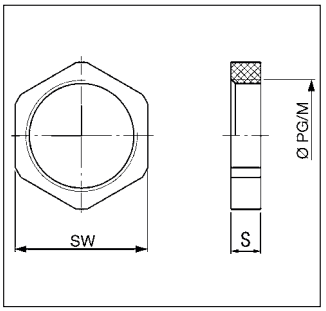

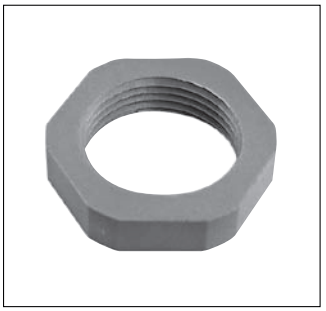

RoHS

Materijal:
poliamid 6
ojačano s 25% staklenih vlakana
* nije ojačano staklenin vlaknima

Radna temperatura:
-30°C do 120°C

Boje/izvedbe:
- svjetlosiva, srebrnosiva, crna
- navoj: PG/metrički/NPT

Svojstva:
- PG prema „starom“ DIN 46 320
- PG „mali“ SW
- ojačano staklenim vlaknima, za maksimalnu mehaničku stabilnost

Upotreba:
- odgovara za sve kabelske i cijevne uvodnice kao i za pribor

Material:
Polyamide 6
25 % glassfiber reinforced
* not glassfiber reinforced

Temperature range:
-40°C to 100°C

Colour(s)/Designs:
- light grey, silver grey, jet black
- Thread: PG/metric/NPT

Characteristics:
- PG acc. to „old“ DIN 46 320
- PG „small“ SW
- glassfiber reinforced, for maximum mechanical stability

Applications:
- suitable for all Cable- and Conduit Glands as well as Accessories

3.3

navoj Thread	debljina (S) mm Thickness (S) mm	SW mm SW mm	broj artikla svjetlosiva RAL 7035 Art. no. light grey RAL 7035	broj artikla srebrnosiva RAL 7001 Art. no. silver grey RAL 7001	broj artikla crna RAL 9005 Art. no. jet black RAL 9005	JP kom. PU pcs.
PG (prema „starom“ DIN 46320) / PG (according to „old“ DIN 46320)						
PG 7	5,0	19,0	7211881	7211807	7211851	50
PG 9	5,0	22,0	7211882	7211809	7211852	50
PG 11	5,0	24,0	7211883	7211811	7211853	50
PG 13,5	6,0	27,0	7211884	7211813	7211854	50
PG 16	6,0	30,0	7211885	7211816	7211855	50
PG 21	6,5	36,0	7211886	7211821	7211856	20
PG 29	7,5	46,0	7211887	7211829	7211857	20
PG 36*	8,0	59,0	7211888	7211836	7211858	10
PG 42*	9,0	64,0	7211889	7211842	7211859	5
PG 48*	9,5	69,0	7211890	7211848	7211860	5
PG „mali“ SW / PG „small“ SW						
PG 7	5,0	15,0	7211765	7211707	7211751	50
PG 9	5,0	19,0	7211766	7211709	7211752	50
PG 11	5,0	22,0	7211767	7211711	7211753	50
PG 13,5	5,0	24,0	7211768	7211713	7211754	50
PG 16	6,0	27,0	7211769	7211716	7211755	50
PG 21	6,5	32,0	7211770	7211721	7211756	25
PG 29	7,5	41,0	7211771	7211729	7211757	20
metrički / metric						
M 12 x 1,5	5,0	19,0	7211979	7211969	7211974	50
M 16 x 1,5	5,0	22,0	7211980	7211970	7211975	50
M 20 x 1,5	5,0	24,0	7211981	7211971	7211976	50
M 25 x 1,5	6,0	30,0	7211982	7211972	7211977	50
M 32 x 1,5	7,5	38,0	7211983	7211973	7211978	50
M 40 x 1,5	8,0	50,0	7211984	7211987	7211990	20
M 50 x 1,5	9,0	60,0	7211960	7211462	7211464	10
M 50 x 1,5	10,0	75,0	7211961	7211463	7211465	5
M 50 x 1,5*	9,0	60,0	7211985	7211988	7211991	10
M 63 x 1,5*	10,0	75,0	7211986	7211989	7211992	5
NPT / NPT						
NPT 3/8"	5,0	22,0	7211485	7211490	7211495	50
NPT 1/2"	6,0	27,0	7211486	7211491	7211496	50
NPT 3/4"	6,5	36,0	7211487	7211492	7211497	25
NPT 1"	7,5	41,0	7211488	7211493	7211498	20

Matica
mesing niklani
PG-/metrički navoj

Lock nuts
nickel-plated brass
PG-/metric thread

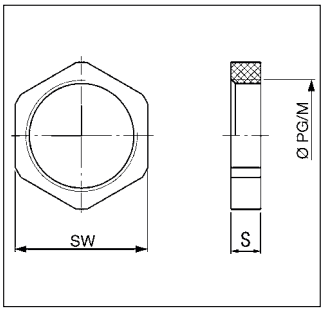

RoHS

Materijal:
mesing niklani

Boje/izvedbe:
- navoj: PG/metrički

Svojstva:
- PG prema „starom“ DIN 46 320

Upotreba:
- odgovara za PG/metričke kabelske i cijevne uvodnice, kao i za pribor

Material:
nickel-plated brass

Colour(s)/Designs:
- Thread: PG/metric

Characteristics:
- PG acc. to „old“ DIN 46 320

Applications:
- suitable for PG/metric Cable- and Conduit Glands as well as Accessories

navoj Thread	debljina (S) mm Thickness (S) mm	SW mm SW mm	broj artikla niklano Art. no. nickel-plated	JP kom. PU pcs.
PG (prema „starom“ DIN 46320) / PG (acc. to „old“ DIN 46320)				
PG 7	2,9	15,0	6000070	50
PG 9	2,9	18,0	6000096	50
PG 11	2,9	21,0	6000118	50
PG 13,5	3,1	23,0	6000134	50
PG 16	3,1	26,0	6000169	50
PG 21	3,6	32,0	6000215	20
PG 29	4,1	41,0	6000290	20
PG 36	5,1	51,0	6000363	10
PG 42	5,1	60,0	6000428	5
PG 48	5,6	64,0	6000487	5
metrički / metric				
M 6 x 1,0	3,5	8,0	6004067	50
M 8 x 1,25	3,5	11,0	6004083	50
M 10 x 1,5	3,5	12,0	6004105	50
M 12 x 1,5	3,0	15,0	6004121	50
M 16 x 1,5	2,8	19,0	6004165	50
M 16 x 1,5	3,0	20,0	6004164	50
M 20 x 1,5	3,5	24,0	6004202	50
M 25 x 1,5	3,5	30,0	6004253	25
M 32 x 1,5	4,5	35,0	6004326	20
M 40 x 1,5	4,5	45,0	6004407	10
M 50 x 1,5	5,5	55,0	6004504	10
M 63 x 1,5	6,0	70,0	6004636	5
M 75 x 1,5	8,0 (10,0)	80,0	6004750	1
M 80 x 2,0 XXL	10,0	95,0	6004752	5
M 90 x 2,0 XXL	10,0	100,0	6004754	5
M 100 x 2,0 XXL	12,0	115,0	6004756	5
M 105 x 2,0 XXL	12,0	115,0	6004757	5
M 110 x 2,0 XXL	12,0	125,0	6004758	1

Matica
mesing niklani
NPT-navoj

Lock nuts
nickel-plated brass
NPT-thread

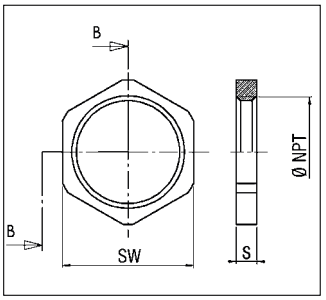

RoHS

Materijal:
mesing niklani

Boje/izvedbe:
• navoj: NPT

Upotreba:
• odgovara za NPT kabelske i cijevne uvodnice, kao i za pribor

Material:
nickel-plated brass

Colour(s)/Designs:
• Thread: NPT

Applications:
• suitable for NPT Cable- and Conduit Glands as well as Accessories

3.3

navoj Thread	debljina (S) mm Thickness (S) mm	SW mm SW mm	broj artikla niklano Art. no. nickel-plated	JP kom. PU pcs.
NPT 1/4“	2,8	17,0	6002010	100
NPT 3/8“	5,0	21,0	6002005	50
NPT 1/2“	5,0	24,0	6002006	50
NPT 3/4“	7,0	30,0	6002007	20
NPT 1“	7,0	36,0	6002008	20
NPT 1 1/2“	5,5	55,0	6002011	5
NPT 2“	5,5	64,0	6002012	50

Matica
mesing niklani
nazubljena
PG-/metrički navoj

Lock nuts
nickel-plated brass
ribbed
PG-/metric thread

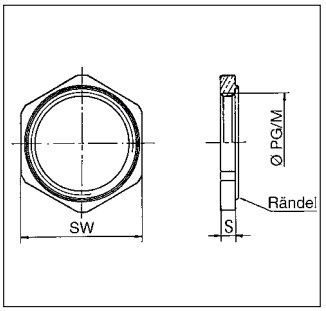

RoHS

Materijal:
mesing niklani

Boje/izvedbe:
- navoj: PG/metrički
- nazubljena

Svojstva:
- PG prema „starom“ DIN 46 320

Upotreba:
- odgovara za PG-/metričke kabelske i cijevne uvodnice, kao i za pribor
- EMC zaštita (poglavlje 3.2)

Material:
nickel-plated brass

Colour(s)/Designs:
- Thread: PG/metric
- ribbed

Characteristics:
- PG acc. to „old“ DIN 46 320

Applications:
- suitable for PG-/metric Cable- and Conduit Glands as well as Accessories
- EMC-applications (Chapter 3.2)

navoj Thread	debljina (S) mm Thickness (S) mm	SW mm SW mm	broj artikla niklano Art. no. nickel-plated	JP kom. PU pcs.
PG (prema „starom“ DIN 46320) / PG (acc. to „old“ DIN 46320)				
PG 7	2,9	15,0	6011007	50
PG 9	2,9	18,0	6011009	50
PG 11	3,1	21,0	6011011	50
PG 13,5	3,1	23,0	6011013	50
PG 16	3,1	26,0	6011016	50
PG 21	3,6	32,0	6011021	20
PG 29	4,1	41,0	6011029	20
PG 36	5,1	51,0	6011036	10
PG 42	5,1	60,0	6011042	10
PG 48	5,6	64,0	6011048	10
metrički / metric				
M 12 x 1,5	3,0	15,0	6011112	50
M 16 x 1,5	3,0	19,0	6011116	50
M 20 x 1,5	3,5	24,0	6011120	50
M 25 x 1,5	3,5	30,0	6011125	25
M 32 x 1,5	4,5	35,0	6011132	20
M 40 x 1,5	4,5	45,0	6011140	10
M 50 x 1,5	5,5	55,0	6011150	10
M 63 x 1,5	6,0	70,0	6011163	10

Matica
nehrđajući čelik 1.4404, INOX 316L
PG-/metrički navoj

Lock nuts
stainless steel 1.4404, INOX 316L
PG-/metric thread

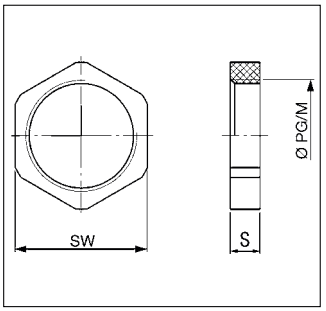

RoHS

Materijal:
nehrđajući čelik 1.4404, INOX 316L

Boje/izvedbe:
- navoj: PG/metrički

Svojstva:
- PG prema „starom“ DIN 46 320

Upotreba:
- odgovara za PG-/metričke kabelske i cijevne uvodnice, kao i za pribor

Material:
stainless steel 1.4404, INOX 316L

Colour(s)/Designs:
- Thread: PG/metric

Characteristics:
- PG acc. to „old“ DIN 46 320

Applications:
- suitable for PG-/metric Cable- and Conduit Glands as well as Accessories

3.3

navoj Thread	debljina (S) mm Thickness (S) mm	SW mm SW mm	broj artikla nehrđajući čelik Art. no. stainless steel	JP kom. PU pcs.
PG (prema „starom“ DIN 46320) / PG (acc. to „old“ DIN 46320)				
PG 7	2,9	15,0	6008207	50
PG 9	2,9	19,0	6008209	50
PG 11	3,1	21,0	6008211	50
PG 13,5	3,1	23,0	6008213	50
PG 16	3,1	26,0	6008216	25
PG 21	3,6	32,0	6008221	20
PG 29	4,1	42,0	6008229	15
PG 36	5,1	57,0	6008236	10
PG 42	5,1	60,0	6008242	10
PG 48	5,6	65,0	6008248	10
metrički / metric				
M 12 x 1,5	3,0	15,0	6010112	50
M 16 x 1,5	3,0	19,0	6010116	50
M 20 x 1,5	3,5	24,0	6010120	50
M 25 x 1,5	3,5	30,0	6010125	25
M 32 x 1,5	4,5	35,0	6010132	20
M 40 x 1,5	4,5	45,0	6010140	10
M 50 x 1,5	5,5	55,0	6010150	10
M 63 x 1,5	6,0	70,0	6010163	5

Redukcija
polikarbonat
PG-navoj

Reducers
Polycarbonate
PG-thread

oblik A / Form A

oblik B / Form B

RoHS

Materijal:
polikarbonat

Radna temperatura:
-40°C do 135°C

Boje/izvedbe:
- svjetlosiva
- vanjski navoj: PG
- unutarnji navoj: PG
- šesterokutna

Upotreba:
- izrada strojeva i aparata
- kućišta

Material:
Polycarbonate

Temperature range:
-40°C to 135°C

Colour(s)/Designs:
- light grey
- External thread: PG
- Internal thread: PG
- hexagon

Applications:
- Machines and apparatus construction
- Housings

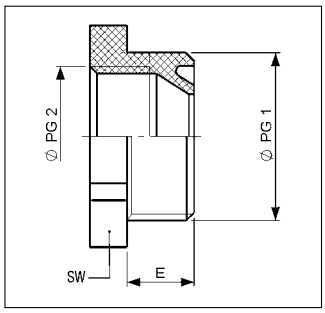

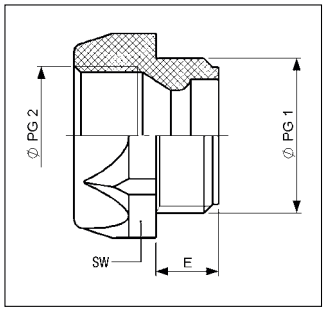

vanjski navoj (Ø PG1) External thread (Ø PG1)	unutarnji navoj (Ø PG2) Internal thread (Ø PG2)	tip Type	SW mm SW mm	duljina navoja (E) mm Thread length (E) mm	broj artikla svjetlosiva Art. no. light grey	JP kom. PU pcs.
oblik A / Form A						
PG 11	PG 7	RED 11/7M	22,0	8,0	7005016	50
PG 13,5	PG 7	RED 13/7M	24,0	9,0	7005024	50
PG 13,5	PG 9	RED 13/9M	24,0	9,0	7005032	50
PG 16	PG 9	RED 16/9M	27,0	9,0	7005040	50
PG 16	PG 11	RED 16/11M	27,0	9,0	7005059	50
PG 21	PG 11	RED 21/11M	32,0	11,0	7005067	25
PG 21	PG 13,5	RED 21/13M	32,0	11,0	7005075	25
PG 21	PG 16	RED 21/16M	32,0	11,3	7005202	25
PG 29	PG 13,5	RED 29/13M	41,0	12,0	7005083	25
PG 29	PG 16	RED 29/16M	41,0	12,0	7005091	25
PG 29	PG 21	RED 29/21M	41,0	12,0	7005210	25
PG 36	PG 16	RED 36/16M	50,0	14,0	7005105	10
PG 36	PG 21	RED 36/21M	55,0	14,0	7005113	10
PG 36	PG 29	RED 36/29M	50,0	14,0	7005229	10
PG 42	PG 21	RED 42/21M	55,0	16,0	7005121	10
PG 42	PG 29	RED 42/29M	55,0	16,0	7005130	10
PG 42	PG 36	RED 42/36M	55,0	16,0	7005237	10
PG 48	PG 29	RED 48/29M	60,0	16,0	7005148	10
PG 48	PG 36	RED 48/36M	60,0	16,0	7005156	10
oblik B / Form B						
PG 9	PG 7	RED 9/7M	19,0	7,0	7005164	50
PG 11	PG 9	RED 11/9M	22,0	8,0	7005172	50
PG 13,5	PG 11	RED 13/11M	24,0	9,0	7005180	50
PG 16	PG 13,5	RED 16/13M	27,0	9,0	7005199	50
PG 48	PG 42	RED 48/42M	60,0	15,5	7005245	10

Redukcija
poliamid
PG-navoj

Reducers
Polyamide
PG-thread

oblik A / Form A

oblik B / Form B

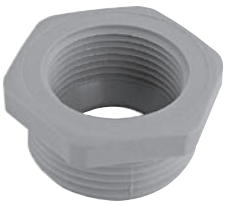

RoHS

Materijal:
poliamid ojačan staklenim vlaknima

Radna temperatura:
-40°C do 100°C

Boje/izvedbe:
- svjetlosiva
- vanjski navoj: PG
- unutarnji navoj: PG
- šesterokutna

Upotreba:
- izrada strojeva i aparata
- kućišta

Material:
Polyamide glassfiber reinforced

Temperature range:
-40°C to 100°C

Colour(s)/Designs:
- light grey
- External thread: PG
- Internal thread: PG
- hexagon

Applications:
- Machines and apparatus construction
- Housings

3.3

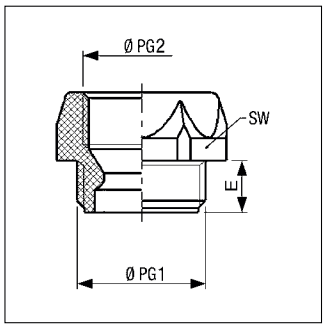

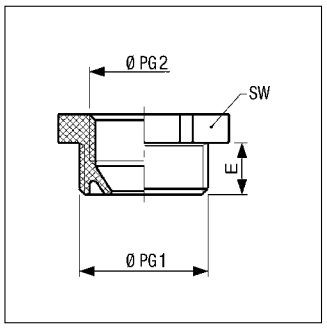

vanjski navoj (Ø PG1) External thread (Ø PG1)	unutarnji navoj (Ø PG2) Internal thread (Ø PG2)	tip Type	SW mm SW mm	duljina navoja (E) mm Thread length (E) mm	broj artikla svjetlosiva Art. no. light grey	JP kom. PU pcs.
oblik A / Form A						
PG 9	PG 7	907 PA	19,0	8,0	7005301	100
PG 11	PG 9	1109 PA	22,0	8,0	7005303	100
PG 13,5	PG 11	1311 PA	24,0	9,0	7005306	100
PG 16	PG 13,5	1613 PA	27,0	10,0	7005309	100
oblik B / Form B						
PG 11	PG 7	1107 PA	22,0	8,0	7005302	100
PG 13,5	PG 7	1307 PA	24,0	9,0	7005304	100
PG 13,5	PG 9	1309 PA	24,0	9,0	7005305	100
PG 16	PG 9	1609 PA	27,0	10,0	7005307	100
PG 16	PG 11	1611 PA	27,0	10,0	7005308	100
PG 21	PG 11	2111 PA	32,0	11,0	7005310	100
PG 21	PG 13,5	2113 PA	32,0	11,0	7005311	100
PG 21	PG 16	2116 PA	32,0	11,0	7005312	100
PG 29	PG 13,5	2913 PA	40,0	11,0	7005313	50
PG 29	PG 16	2916 PA	40,0	11,0	7005314	50
PG 29	PG 21	2921 PA	40,0	11,0	7005315	50
PG 36	PG 21	3621 PA	50,0	13,0	7005317	50
PG 36	PG 29	3629 PA	50,0	18,0	7005318	50
PG 42	PG 21	4221 PA	55,0	18,0	7005319	25
PG 42	PG 29	4229 PA	55,0	18,0	7005320	25
PG 42	PG 36	4236 PA	55,0	18,0	7005321	25
PG 48	PG 29	4829 PA	60,0	18,0	7005322	25
PG 48	PG 36	4836 PA	60,0	14,0	7005323	25
PG 48	PG 42	4842 PA	60,0	17,0	7005324	25

Redukcija
poliamid
metrički navoj

Reducers
Polyamide
metric thread

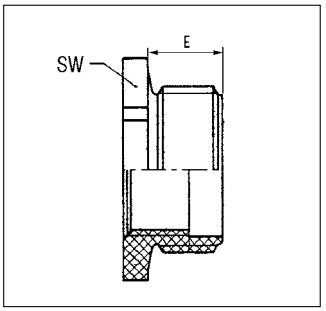

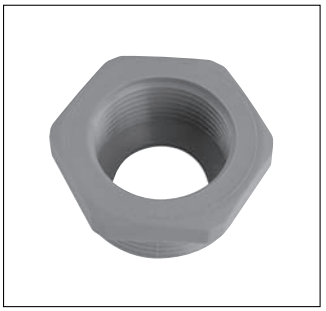

RoHS

Materijal:
poliamid
25% ojačan staklenim vlaknima

Radna temperatura:
-40°C do 100°C

Boje/izvedbe:
- svjetlosiva
- vanjski navoj: metrički
- unutarnji navoj: metrički
- šesterokutna

Upotreba:
- izrada strojeva i aparata
- kućišta

Material:
Polyamide
25% glassfiber reinforced

Temperature range:
-40°C to 100°C

Colour(s)/Designs:
- light grey
- External thread: metric
- Internal thread: metric
- hexagon

Applications:
- Machines and apparatus construction
- Housings

vanjski navoj External thread	unutarnji navoj Internal thread	SW mm SW mm	duljina navoja (E) mm Thread length (E) mm	broj artikla svjetlosiva RAL 7035 Art. no. light grey RAL 7035	broj artikla srebrnosiva RAL 7001 Art. no. silver grey RAL 7001	broj artikla crna RAL 9005 Art. no. jet black RAL 9005	JP kom. PU pcs.
M 16 x 1,5	M 12 x 1,5	20,0	8,0	7008516	7008616	7008716	50
M 20 x 1,5	M 12 x 1,5	20,0	9,0	7008519	7008619	7008719	50
M 20 x 1,5	M 16 x 1,5	24,0	9,0	7008520	7008620	7008720	50
M 25 x 1,5	M 12 x 1,5	30,0	10,0	7008523	7008623	7008723	50
M 25 x 1,5	M 16 x 1,5	30,0	10,0	7008524	7008624	7008724	50
M 25 x 1,5	M 20 x 1,5	30,0	10,0	7008525	7008625	7008725	50
M 32 x 1,5	M 16 x 1,5	36,0	11,0	7008530	7008630	7008730	50
M 32 x 1,5	M 20 x 1,5	36,0	11,0	7008531	7008631	7008731	50
M 32 x 1,5	M 25 x 1,5	36,0	11,0	7008532	7008632	7008732	50
M 40 x 1,5	M 20 x 1,5	44,0	12,0	7008538	7008638	7008738	50
M 40 x 1,5	M 25 x 1,5	44,0	12,0	7008539	7008639	7008739	50
M 40 x 1,5	M 32 x 1,5	44,0	12,0	7008540	7008640	7008740	50
M 50 x 1,5	M 25 x 1,5	55,0	13,0	7008548	7008648	7008748	20
M 50 x 1,5	M 32 x 1,5	55,0	13,0	7008549	7008649	7008749	20
M 50 x 1,5	M 40 x 1,5	55,0	13,0	7008550	7008650	7008750	20
M 63 x 1,5	M 32 x 1,5	70,0	15,0	7008561	7008661	7008761	20
M 63 x 1,5	M 40 x 1,5	70,0	15,0	7008562	7008662	7008762	20
M 63 x 1,5	M 50 x 1,5	70,0	15,0	7008563	7008663	7008763	10

Redukcija
mesing niklani
PG-navoj

Reducers
nickel-plated brass
PG-thread

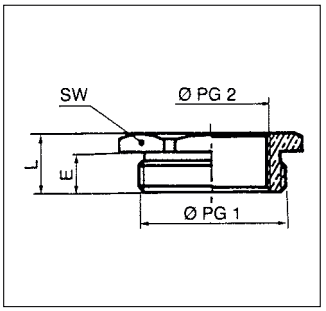

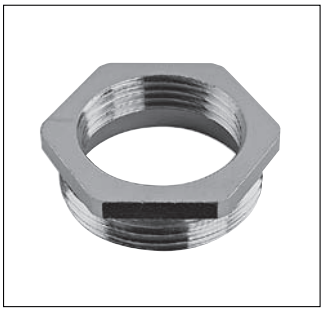

RoHS

Materijal:
mesing niklani
O-brtva: nitril

Radna temperatura:
-40°C do 100°C

Boje/izvedbe:
- vanjski navoj: PG
- unutarnji navoj: PG
- šesterokutna

Upotreba:
- izrada strojeva i aparata
- kućišta

Material:
nickel-plated brass
O-ring: Nitrile

Temperature range:
-40°C to 100°C

Colour(s)/Designs:
- External thread: PG
- Internal thread: PG
- hexagon

Applications:
- Machines and apparatus construction
- Housings

3.3

vanjski navoj (Ø PG1) / External thread (Ø PG1)	unutarnji navoj (Ø PG2) / Internal thread (Ø PG2)	tip / Type	SW mm / SW mm	duljina navoja (E) mm / Thread length (E) mm	ukupna duljina (L) mm / Complete length (L) mm	broj artikla bez O-brtve / Art. no. without O-ring	broj artikla sa O-brtvom / Art. no. with O-ring	JP kom. / PU pcs.
PG 9	PG 7	RS9/7	17,0	5,0	8,0	6102018	6102300	100
PG 11	PG 9	RS11/9	19,0	6,0	9,0	6102034	6102310	100
PG 11	PG 7	RS11/7	19,0	6,0	9,0	6102030	6102311	100
PG 13,5	PG 11	RS13,5/11	21,0	6,0	9,0	6102077	6102320	100
PG 13,5	PG 9	RS13,5/9	21,0	6,0	9,0	6102042	6102321	100
PG 13,5	PG 7	RS13,5/7	21,0	6,0	8,5	6102026	6102322	100
PG 16	PG 13,5	RS16/13	23,0	6,0	9,0	6102115	6102330	100
PG 16	PG 11	RS16/11	23,0	6,0	9,0	6102085	6102331	100
PG 16	PG 9	RS16/9	23,0	6,0	9,0	6102050	6102332	100
PG 16	PG 7	RS16/7	24,0	7,0	10,0	-	6102333	100
PG 21	PG 16	RS21/16	29,0	7,0	10,0	6102158	6102340	50
PG 21	PG 13,5	RS21/13,5	29,0	7,0	10,0	6102123	6102341	50
PG 21	PG 11	RS21/11	29,0	7,0	10,0	6102093	6102342	20
PG 21	PG 9	RS21/9	29,0	7,0	10,0	6102069	-	50
PG 29	PG 21	RS29/21	39,0	8,0	11,0	6102190	6102350	25
PG 29	PG 16	RS29/16	39,0	8,0	11,0	6102166	6102351	25
PG 29	PG 13,5	RS29/13,5	39,0	8,0	11,0	6102131	6102352	25
PG 29	PG 11	RS29/11	39,0	8,0	11,0	6102107	-	25
PG 36	PG 29	RS36/29	50,0	8,0	11,0	6102220	6102360	25
PG 36	PG 21	RS36/21	50,0	8,0	11,0	6102204	6102361	25
PG 36	PG 13,5	RS36/13,5	50,0	8,0	11,0	6102140	-	25
PG 42	PG 36	RS42/36	64,0	10,0	14,0	6102241	6102370	25
PG 42	PG 29	RS42/29	64,0	10,0	14,0	6102239	6102371	25
PG 48	PG 42	RS48/42	64,0	10,0	14,0	6102258	6102380	25
PG 48	PG 36	RS48/36	64,0	10,0	14,0	6102255	6102381	25
PG 48	PG 29	RS48/29	64,0	10,0	14,0	6102247	-	25
PG 48	PG 21	RS48/21	64,0	10,0	14,0	6102212	-	25
PG 48	PG 16	RS48/16	64,0	10,0	14,0	6102182	-	25

Redukcija
mesing niklani metrički/PG-navoj

Reducers
nickel-plated brass metric/PG-thread

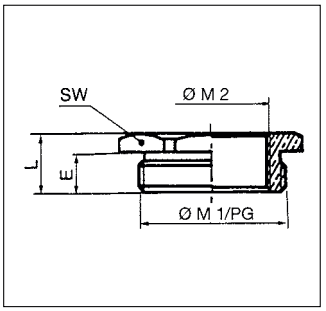

RoHS

Materijal:
mesing niklani
O-brtva: nitril

Radna temperatura:
-40°C do 100°C

Boje/izvedbe:
- vanjski navoj: metrički / PG
- unutarnji navoj: metrički/metrički
- šesterokutna

Upotreba:
- izrada strojeva i aparata
- kućišta

Material:
nickel-plated brass
O-ring: Nitrile

Temperature range:
-40°C to 100°C

Colour(s)/Designs:
- External thread: metric / PG
- Internal thread: metric/metric
- hexagon

Applications:
- Machines and apparatus construction
- Housings

vanjski navoj (Ø M1/PG) External thread (Ø M1/PG)	unutarnji navoj (Ø M2) Internal thread (Ø M2)	tip Type	SW mm SW mm	duljina navoja (E) mm Thread length (E) mm	ukupna duljina (L) mm Complete length (L) mm	broj artikla bez O-brtve Art. no. without O-ring	broj artikla sa O-brtvom Art. no. with O-ring	JP kom. PU pcs.
metrički / metric	**metrički / metric**							
M 16 x 1,5	M 12 x 1,5	RSM16/12	20,0	7,0	10,0	6102400	6102450	50
M 20 x 1,5	M 12 x 1,5	RSM20/12	24,0	7,0	10,0	6102404	6102455	50
M 20 x 1,5	M 16 x 1,5	RSM20/16	24,0	7,0	10,0	6102405	6102460	50
M 25 x 1,5	M 16 x 1,5	RSM25/16	30,0	8,0	11,5	6102409	6102464	20
M 25 x 1,5	M 20 x 1,5	RSM25/20	30,0	8,0	11,5	6102410	6102465	20
M 32 x 1,5	M 16 x 1,5	RSM32/16	36,0	8,5	12,5	6102414	6102468	20
M 32 x 1,5	M 20 x 1,5	RSM32/20	36,0	8,5	12,5	6102413	6102469	20
M 32 x 1,5	M 25 x 1,5	RSM32/25	36,0	8,5	12,5	6102415	6102470	20
M 40 x 1,5	M 25 x 1,5	RSM40/25	42,0	8,5	12,5	6102419	6102474	10
M 40 x 1,5	M 32 x 1,5	RSM40/32	42,0	8,5	12,5	6102420	6102475	10
M 50 x 1,5	M 32 x 1,5	RSM50/32	55,0	9,5	14,5	6102424	6102479	10
M 50 x 1,5	M 40 x 1,5	RSM50/40	55,0	9,5	14,5	6102425	6102480	5
M 63 x 1,5	M 40 x 1,5	RSM63/40	70,0	10,5	17,5	6102429	6102484	5
M 63 x 1,5	M 50 x 1,5	RSM63/50	70,0	10,5	17,5	6102430	6102485	5
M 75 x 1,5	M 63 x 1,5	RSM75/63	80,0	11,5	19,5	6102435	6102490	1
PG / PG								
PG 9	M 6 x 1,0	3509.M 6	18,0	6,5	9,5	-	6104106	50
PG 9	M 8 x 1,25	3509.M 8	18,0	6,5	9,5	-	6104108	50
PG 9	M 10 x 1,5	3509.M 10	18,0	6,5	9,5	-	6104110	50
PG 11	M 6 x 1,0	3511.M 6	20,0	6,5	9,5	-	6104206	50
PG 11	M 8 x 1,25	3511.M 8	20,0	6,5	9,5	-	6104208	50
PG 11	M 10 x 1,5	3511.M 10	20,0	6,5	9,5	-	6104210	50
PG 11	M 12 x 1,5	3511.M 12	20,0	5,0	8,0	-	6104212	50
PG 16	M 16 x 1,5	3516.M 16	24,0	7,0	10,0	-	6104416	50
PG 21	M 25 x 1,5	3521.M 25	30,0	7,5	11,0	-	6104525	50
PG 29	M 32 x 1,5	3529.M 32	38,0	8,0	12,0	-	6104632	50

Redukcija
mesing niklani
nazubljena
PG-navoj

Reducer
nickel-plated brass
milled
PG-thread

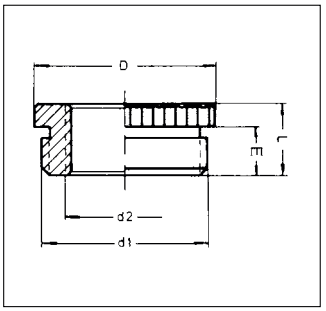

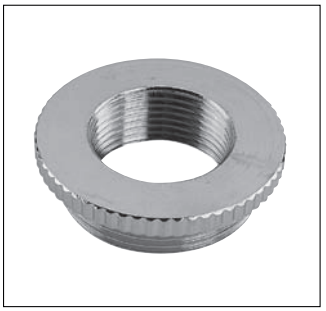

RoHS

Materijal:
mesing niklani

Boje/izvedbe:
- vanjski navoj: PG
- unutarnji navoj: PG
- okrugla
- nazubljena

Svojstva:
- PG prema „starom“ DIN 46 320

Upotreba:
- izrada strojeva i aparata
- kućišta

Material:
nickel-plated brass

Colour(s)/Designs:
- External thread: PG
- Internal thread: PG
- round
- milled

Characteristics:
- PG acc. to „old“ DIN 46 320

Applications:
- Machines and apparatus construction
- Housings

3.3

vanjski navoj (d1) External thread (d1)	unutarnji navoj (d2) Internal thread (d2)	tip Type	promjer (D) mm Diameter (D) mm	duljina navoja (E) mm Thread length (E) mm	ukupna duljina (L) mm Complete length (L) mm	broj artikla niklano Art. no. nickel-plated	JP kom. PU pcs.
prema „starom“ DIN 46320 / acc. to „old“ DIN 46320							
PG 9	PG 7	90007	17,0	6,0	8,5	6100015	50
PG 11	PG 7	11007	20,0	6,0	8,5	6100023	50
PG 11	PG 9	11009	20,0	6,0	9,0	6100031	50
PG 13,5	PG 7	13507	22,0	6,5	9,0	6100040	50
PG 13,5	PG 9	13509	22,0	6,5	9,5	6100058	50
PG 13,5	PG 11	13511	22,0	6,5	9,5	6100066	50
PG 16	PG 7	16007	24,0	6,5	9,5	6100074	25
PG 16	PG 9	16009	24,0	6,5	9,5	6100082	25
PG 16	PG 11	16011	24,0	6,5	9,5	6100090	25
PG 16	PG 13,5	16135	24,0	6,5	9,5	6100104	25
PG 21	PG 11	21011	30,0	7,0	10,0	6100112	20
PG 21	PG 13,5	21135	30,0	7,0	10,0	6100120	20
PG 21	PG 16	21016	30,0	7,0	10,0	6100139	20
PG 29	PG 16	29016	39,0	8,0	11,5	6100147	15
PG 29	PG 21	29021	39,0	8,0	11,5	6100155	15
PG 36	PG 21	36021	50,0	9,0	12,5	6100163	10
PG 36	PG 29	36029	50,0	9,0	12,5	6100171	10
PG 42	PG 29	42029	57,0	10,0	14,0	6100180	10
PG 42	PG 36	42036	57,0	10,0	14,0	6100198	10
PG 48	PG 36	48036	64,0	10,0	14,0	6100201	10
PG 48	PG 42	48042	64,0	10,0	14,0	6100210	10

Redukcija
mesing niklani
nazubljena
metrički/PG-navoj

Reducers
nickel-plated brass
milled
metric/PG-thread

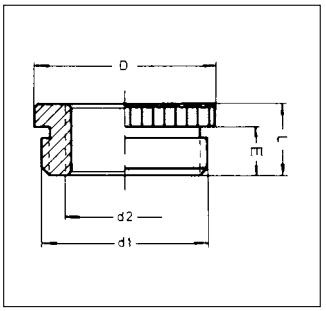

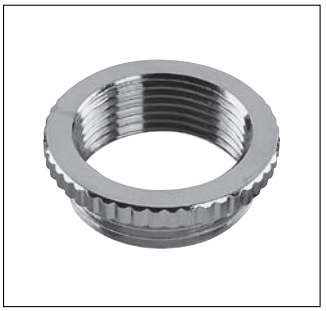

MS

Materijal:
mesing niklani
O-brtva: nitril

Radna temperatura:
-40°C do 100°C

Boje/izvedbe:
- vanjski navoj: metrički
- unutarnji navoj: PG
- okrugla
- nazubljena

Upotreba:
- izrada strojeva i aparata
- kućišta

Material:
nickel-plated brass
O-ring: Nitrile

Temperature range:
-40°C to 100°C

Colour(s)/Designs:
- External thread: metric
- Internal thread: PG
- round
- milled

Applications:
- Machines and apparatus construction
- Housings

vanjski navoj (d1) External thread (d1)	unutarnji navoj (d2) Internal thread (d2)	promjer (D) mm Diameter (D) mm	duljina navoja (E) mm Thread length (E) mm	ukupna duljina (L) mm Complete length (L) mm	broj artikla bez O-brtve Art. no. without O-ring	broj artikla sa O-brtvom Art. no. with O-ring	JP kom. PU pcs.
M 16 x 1,5	PG 7	20,0	6,0	9,0	6104716	6104770	100
M 20 x 1,5	PG 9	24,0	6,5	9,5	6104720	6104771	50
M 25 x 1,5	PG 11	30,0	7,0	10,0	6104725	6104772	50
M 25 x 1,5	PG 13,5	30,0	7,0	10,0	6104726	6104773	50
M 25 x 1,5	PG 16	30,0	7,0	10,0	6104727	6104774	50
M 32 x 1,5	PG 16	34,0	8,0	11,5	6104732	6104775	20
M 32 x 1,5	PG 21	34,0	8,0	11,5	6104733	6104776	20
M 40 x 1,5	PG 21	50,0	9,0	12,0	6104740	6104777	10
M 50 x 1,5	PG 29	57,0	9,0	12,0	6104750	6104778	5
M 63 x 1,5	PG 36	70,0	10,5	14,5	6104763	6104779	1
M 63 x 1,5	PG 42	70,0	10,5	14,5	6104764	6104780	1

Redukcija
mesing niklani
nazubljena
metrički/PG-navoj

Reducers
nickel-plated brass
milled
metric/PG-thread

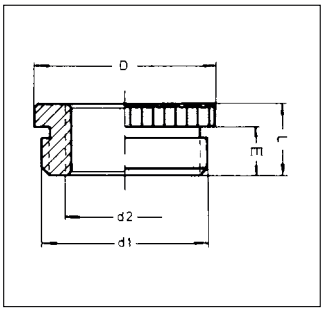

RoHS

Materijal:
mesing niklani

Boje/izvedbe:
- vanjski navoj: metrički / PG
- unutarnji navoj: metrički/metrički
- okrugla
- nazubljena

Upotreba:
- izrada strojeva i aparata
- kućišta

Material:
nickel-plated brass

Colour(s)/Designs:
- External thread: metric / PG
- Internal thread: metric/metric
- round
- milled

Applications:
- Machines and apparatus construction
- Housings

3.3

vanjski navoj (d1) External thread (d1)	unutarnji navoj (d2) Internal thread (d2)	promjer (D) mm Diameter (D) mm	duljina navoja (E) mm Thread length (E) mm	ukupna duljina (L) mm Complete length (L) mm	broj artikla niklano Art. no. nickel-plated	JP kom. PU pcs.
metrički / metric	metrički / metric					
M 16 x 1,5	M 12 x 1,5	18,0	5,0	7,5	6104817	100
M 16 x 1,5	M 12 x 1,5	20,0	7,0	10,0	6104816	50
M 20 x 1,5	M 12 x 1,5	22,0	6,0	9,0	6104818	100
M 20 x 1,5	M 12 x 1,5	24,0	7,0	10,0	6104819	50
M 20 x 1,5	M 16 x 1,5	22,0	6,0	9,0	6104821	100
M 20 x 1,5	M 16 x 1,5	24,0	7,0	10,0	6104820	50
M 25 x 1,5	M 16 x 1,5	30,0	8,0	11,5	6104824	50
M 25 x 1,5	M 20 x 1,5	27,0	7,0	10,0	6104826	100
M 25 x 1,5	M 20 x 1,5	30,0	8,0	11,5	6104825	50
M 32 x 1,5	M 20 x 1,5	34,0	8,0	11,0	6104830	25
M 32 x 1,5	M 20 x 1,5	34,0	8,5	12,5	6104831	20
M 32 x 1,5	M 25 x 1,5	34,0	8,0	11,0	6104833	50
M 32 x 1,5	M 25 x 1,5	34,0	8,5	12,5	6104832	20
M 40 x 1,5	M 25 x 1,5	43,0	8,0	11,5	6104838	20
M 40 x 1,5	M 25 x 1,5	50,0	8,5	12,5	6104839	20
M 40 x 1,5	M 32 x 1,5	50,0	8,5	12,5	6104840	20
M 50 x 1,5	M 32 x 1,5	57,0	9,5	14,5	6104849	10
M 50 x 1,5	M 40 x 1,5	57,0	9,5	14,5	6104850	10
M 63 x 1,5	M 40 x 1,5	70,0	10,5	17,5	6104862	5
M 63 x 1,5	M 50 x 1,5	70,0	10,5	17,5	6104863	5
M 75 x 1,5	M 63 x 1,5	80,0	11,5	19,5	6104875	1
PG /PG	metrički / metric					
PG 16	M 20 x 1,5	24,0	7,0	10,0	6100416	50
PG 21	M 25 x 1,5	30,0	8,0	11,5	6100421	20
PG 29	M 25 x 1,5	39,0	9,0	12,5	6100429	20

Proširenje
poliamid
PG-/metrički navoj

Enlargers
Polyamide
PG-/metric thread

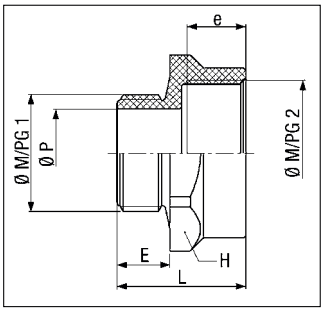

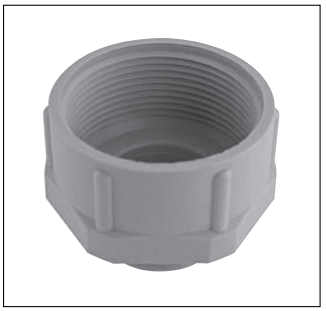

RoHS

Materijal:
poliamid 25% ojačan staklenim vlaknima

Radna temperatura:
-30°C do 120°C

Boje/izvedbe:
- svjetlosiva, srebrnosiva, crna
- vanjski navoj: PG / metrički
- unutarnji navoj: PG / metrički

Upotreba:
- izrada strojeva i aparata
- kućišta

Material:
Polyamide 25% glassfiber reinforced

Temperature range:
-30°C to 120°C

Colour(s)/Designs:
- light grey, silver grey, jet black
- External thread: PG / metric
- Internal thread: PG / metric

Applications:
- Machines and apparatus construction
- Housings

vanjski navoj (Ø M/PG1) External thread (Ø M/PG1)	unutarnji navoj (Ø M/PG2) Internal thread (Ø M/PG2)	tip Type	SW mm SW mm	duljina navoja (E) mm Thread length (E) mm	ukupna duljina (L) mm Complete length (L) mm	broj artikla svjetlosiva RAL 7035 Art. no. light grey RAL 7035	broj artikla srebrnosiva RAL 7001 Art. no. silver grey RAL 7001	broj artikla crna RAL 9005 Art. no. jet black RAL 9005	JP kom. PU pcs.
PG / PG									
PG 7	PG 9	709PA	19,0	7,0	20,0	7004200	-	-	100
PG 9	PG 11	911PA	22,0	8,0	23,0	7004201	-	-	100
PG 11	PG 13,5	1113PA	24,0	8,0	23,0	7004202	-	-	100
PG 13,5	PG 16	1316PA	27,0	9,0	26,0	7004203	-	-	100
PG 16	PG 21	1621PA	32,0	9,0	29,0	7004204	-	-	100
PG 21	PG 29	2129PA	42,0	10,0	32,0	7004205	-	-	50
PG 29	PG 36	2936PA	53,0	11,0	35,5	7004206	-	-	25
PG 36	PG 42	3642PA	60,0	13,0	40,5	7004207	-	-	10
PG 42	PG 48	4248PA	65,0	13,0	41,0	7004208	-	-	10
metrički / metric									
M 12 x 1,5	M 16 x 1,5	AMP 12/16	20,0	8,0	18,5	7004300	7004310	7004320	50
M 16 x 1,5	M 20 x 1,5	AMP 16/20	24,0	8,0	20,0	7004301	7004311	7004321	50
M 20 x 1,5	M 25 x 1,5	AMP 20/25	30,0	9,0	22,0	7004302	7004312	7004322	50
M 25 x 1,5	M 32 x 1,5	AMP 25/32	36,0	10,0	24,0	7004303	7004313	7004323	20
M 32 x 1,5	M 40 x 1,5	AMP 32/40	44,0	11,0	26,0	7004304	7004314	7004324	20
M 40 x 1,5	M 50 x 1,5	AMP 40/50	55,0	12,0	28,0	7004305	7004315	7004325	20
M 50 x 1,5	M 63 x 1,5	AMP 50/63	70,0	13,0	31,5	7004306	7004316	7004326	10

Proširenje
mesing niklani
PG-navoj

Enlargers
nickel-plated brass
PG-thread

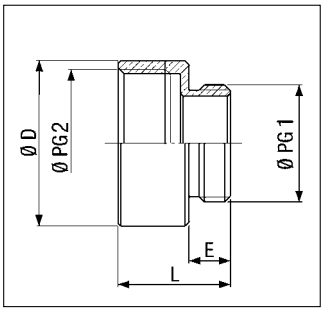

RoHS

Materijal:
mesing niklani

Boje/izvedbe:
- vanjski navoj: PG
- unutarnji navoj: PG
- okruglo

Svojstva:
- PG prema „starom“ DIN 46 320

Upotreba:
- izrada strojeva i aparata
- kućišta

Material:
nickel-plated brass

Colour(s)/Designs:
- External thread: PG
- Internal thread: PG
- round

Characteristics:
- PG acc. to „old“ DIN 46 320

Applications:
- Machines and apparatus construction
- Housings

3.3

vanjski navoj (Ø PG1) / External thread (Ø PG1)	unutarnji navoj (Ø PG2) / Internal thread (Ø PG2)	tip / Type	promjer (D) mm / Diameter (D) mm	duljina navoja (E) mm / Thread length (E) mm	ukupna duljina (L) mm / Complete length (L) mm	broj artikla niklano / Art. no. nickel-plated	JP kom. / PU pcs.
prema „starom“ DIN 46320 / acc. to „old“ DIN 46320							
PG 7	PG 9	70009	17,0	5,0	15,0	6200010	50
PG 9	PG 11	90011	20,0	6,0	16,5	6200028	50
PG 9	PG 13,5	90135	22,0	6,0	17,5	6200036	50
PG 11	PG 13,5	11135	22,0	6,0	17,5	6200044	50
PG 11	PG 16	11016	24,0	6,0	18,5	6200052	25
PG 13,5	PG 16	13516	24,0	6,5	19,0	6200060	25
PG 13,5	PG 21	13521	30,0	6,5	21,0	6200079	20
PG 16	PG 21	16021	30,0	6,5	21,0	6200087	20
PG 21	PG 29	21029	39,0	7,0	23,0	6200095	15
PG 29	PG 36	29036	50,0	8,0	28,0	6200109	10
PG 36	PG 42	36042	57,0	9,0	31,0	6200117	10
PG 42	PG 48	42048	64,0	10,0	33,0	6200125	10

Proširenje
mesing niklani metrički navoj

Enlargers
nickel-plated brass metric thread

okruglo / round

šesterokutno / hexagon

RoHS

Materijal:
mesing niklani

Boje/izvedbe:
- vanjski navoj: metrički
- unutarnji navoj: metrički
- okruglo
- šesterokutno

Upotreba:
- izrada strojeva i aparata
- kućišta

Material:
nickel-plated brass

Colour(s)/Designs:
- External thread: metric
- Internal thread: metric
- round
- hexagon

Applications:
- Machines and apparatus construction
- Housings

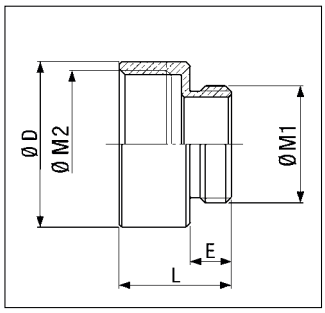

vanjski navoj (Ø M1) External thread (Ø M1)	unutarnji navoj (Ø M2) Internal thread (Ø M2)	tip Type	promjer (D) mm Diameter (D) mm	duljina navoja (E) mm Thread length (E) mm	ukupna duljina (L) mm Complete length (L) mm	broj artikla niklano Art. no. nickel-plated	JP kom. PU pcs.
okruglo / round							
M 12 x 1,5	M 16 x 1,5	M12/M16 RD	18,0	5,0	15,0	6200212	50
M 16 x 1,5	M 20 x 1,5	M16/M20 RD	22,0	6,0	17,5	6200216	50
M 20 x 1,5	M 25 x 1,5	M20/M25 RD	27,0	6,5	19,0	6200220	50
M 25 x 1,5	M 32 x 1,5	M25/M32 RD	34,0	8,0	20,5	6200225	20
M 32 x 1,5	M 40 x 1,5	M32/M40 RD	42,0	7,0	23,0	6200232	20
M 40 x 1,5	M 50 x 1,5	M40/M50 RD	53,0	9,0	31,0	6200240	10
M 50 x 1,5	M 63 x 1,5	M50/M63 RD	65,0	9,5	24,0	6200250	5
M 63 x 1,5	M 75 x 1,5	M63/M75 RD	80,0	10,5	26,0	6200263	1

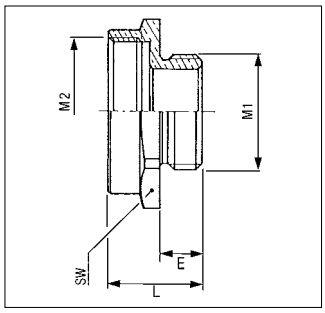

vanjski navoj (Ø M1) External thread (Ø M1)	unutarnji navoj (Ø M2) Internal thread (Ø M2)	tip Type	SW mm SW mm	duljina navoja (E) mm Thread length (E) mm	ukupna duljina (L) mm Complete length (L) mm	broj artikla bez O-brtve Art. no. without O-ring	broj artikla sa O-brtvom Art. no. with O-ring	JP kom. PU pcs.
šesterokutno / hexagon								
M10 x 1,5	M12 x 1,5	M10/M12	14,0	7,0	19,0	6200310	6200410	50
M12 x 1,5	M16 x 1,5	M12/M16	19,0	7,0	19,0	6200312	6200412	50
M16 x 1,5	M20 x 1,5	M16/M20	22,0	7,0	19,0	6200316	6200416	50
M20 x 1,5	M25 x 1,5	M20/M25	28,0	7,0	20,0	6200320	6200420	50
M25 x 1,5	M32 x 1,5	M25/M32	36,0	8,0	21,5	6200325	6200425	20
M32 x 1,5	M40 x 1,5	M32/M40	42,0	8,5	22,0	6200332	6200432	20
M40 x 1,5	M50 x 1,5	M40/M50	52,0	8,5	23,0	6200340	6200440	10
M50 x 1,5	M63 x 1,5	M50/M63	65,0	9,5	25,0	6200350	6200450	5
M63 x 1,5	M75 x 1,5	M63/M75	80,0	10,5	27,5	6200363	6200463	1

Međukomad
mesing niklani
metrički navoj

Intermediate Parts
nickel-plated brass
metric thread

šesterokutni / hexagon

RoHS

Materijal:
mesing niklani

Boje/izvedbe:
- vanjski navoj: metrički
- unutarnji navoj: metrički
- okrugli
- šesterokutni

Upotreba:
- izrada strojeva i aparata
- kućišta

Material:
nickel-plated brass

Colour(s)/Designs:
- External thread: metric
- Internal thread: metric
- round
- hexagon

Applications:
- Machines and apparatus construction
- Housings

3.3

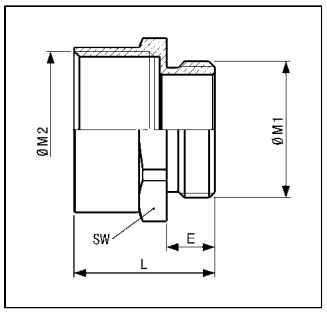

vanjski navoj (Ø M1) External thread (Ø M1)	unutarnji navoj (Ø M2) Internal thread (Ø M2)	SW mm SW mm	duljina navoja (E) mm Thread length (E) mm	ukupna duljina (L) mm Complete length (L) mm	broj artikla niklano Art. no. nickel-plated	JP kom. PU pcs.
šesterokutni / hexagon						
M 12 x 1,5	M 12 x 1,5	14,0	5,0	15,0	6604770	100
M 16 x 1,5	M 16 x 1,5	18,0	6,0	17,0	6604771	50
M 20 x 1,5	M 20 x 1,5	22,0	6,0	18,0	6604772	50
M 25 x 1,5	M 25 x 1,5	27,0	7,0	19,0	6604773	50
M 32 x 1,5	M 32 x 1,5	34,0	7,0	19,0	6604774	20
M 40 x 1,5	M 40 x 1,5	42,0	8,0	25,0	6604775	10
M 50 x 1,5	M 50 x 1,5	52,0	9,0	28,0	6604776	5
M 63 x 1,5	M 63 x 1,5	65,0	9,0	30,0	6604777	1

Međukomad
mesing niklani
PG-navoj

Intermediate Parts
nickel-plated brass
PG-thread

šesterokutni / hexagon

RoHS

Materijal:
mesing niklani

Boje/izvedbe:
- vanjski navoj: PG
- unutarnji navoj: PG
- okrugla
- šesterokutni
- dugi navoj (15 mm) raspoloživ na upit

Svojstva:
- PG prema „starom“ DIN 46 320

Upotreba:
- izrada strojeva i aparata
- kućišta

Material:
nickel-plated brass

Colour(s)/Designs:
- External thread: PG
- Internal thread: PG
- round
- hexagon
- long thread (15 mm) available on request

Characteristics:
- PG acc. to „old“ DIN 46 320

Applications:
- Machines and apparatus construction
- Housings

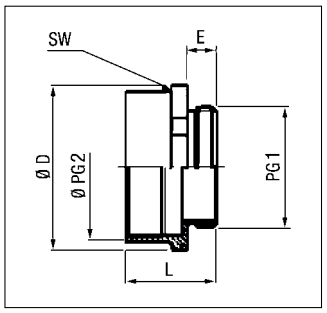

vanjski navoj (Ø PG1) External thread (Ø PG1)	unutarnji navoj (Ø PG2) Internal thread (Ø PG2)	tip Type	SW mm SW mm	duljina navoja (E) mm Thread length (E) mm	ukupna duljina (L) mm Complete length (L) mm	broj artikla niklano Art. no. nickel-plated	JP kom. PU pcs.
šesterokutni / hexagon							
PG 7	PG 7	7007	14,0	5,0	15,0	6606075	1
PG 9	PG 9	9007	17,0	6,0	16,5	6606091	1
PG 11	PG 11	1107	20,0	6,0	17,0	6606113	1
PG 13,5	PG 13,5	1357	22,0	6,5	19,0	6606130	1
PG 16	PG 16	1607	24,0	6,5	20,0	6606164	1
PG 21	PG 21	2107	30,0	7,0	22,0	6606210	1
PG 29	PG 29	2907	40,0	8,0	24,5	6606296	1
PG 36	PG 36	3607	50,0	9,0	28,5	6606369	1
PG 42	PG 42	4207	57,0	10,0	32,0	6606423	1
PG 48	PG 48	4807	64,0	10,0	33,0	6606482	1

Međukomad
mesing niklani
PG-/metrički navoj

Intermediate Parts
nickel-plated brass
PG-/metric thread

oblik A / Form A

oblik B / Form B

RoHS

Materijal:
mesing niklani
O-brtva: nitril

Radna temperatura:
-40°C do 100°C

Boje/izvedbe:
- vanjski navoj: PG
- unutarnji navoj: metrički
- šesterokutni

Upotreba:
kao adapter za prijelaz sa PG na metrički navoj
- izrada strojeva i aparata
- kućišta

Material:
nickel-plated brass
O-ring: Nitrile

Temperature range:
-40°C to 100°C

Colour(s)/Designs:
- External thread: PG
- Internal thread: metric
- hexagon

Applications:
as adapter between PG and metric thread
- Machines and apparatus construction
- Housings

3.3

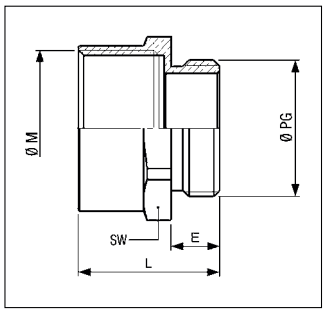

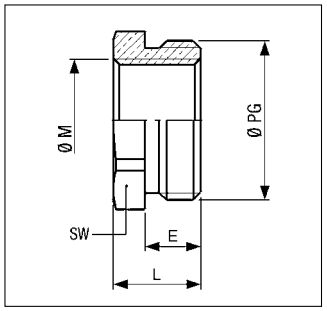

vanjski navoj External thread	unutarnji navoj Internal thread	tip Type	SW mm SW mm	duljina navoja (E) mm Thread length (E) mm	ukupna duljina (L) mm Complete length (L) mm	broj artikla bez O-brtve Art. no. without O-ring	broj artikla sa O-brtvom Art. no. with O-ring	JP kom. PU pcs.
oblik A / Form A								
PG 7	M 12 x 1,5	0712	17,0	6,5	16,5	6604807	-	50
PG 7	M 16 x 1,5	0716	19,0	6,5	16,5	6604808	-	50
PG 9	M 16 x 1,5	0916	19,0	6,5	16,5	6604810	6604863	50
PG 9	M 20 x 1,5	0920	22,0	6,5	18,5	6604811	-	50
PG 11	M 20 x 1,5	1120	22,0	7,0	17,0	6604813	-	50
PG 11	M 25 x 1,5	1125	27,0	7,0	18,0	6604814	-	50
PG 13,5	M 20 x 1,5	1320	24,0	7,0	17,0	6604816	6604869	50
PG 13,5	M 25 x 1,5	1325	27,0	7,0	18,0	6604817	-	50
PG 16	M 20 x 1,5	1620	27,0	7,0	16,0	6604818	-	50
PG 16	M 25 x 1,5	1625	27,0	7,0	18,0	6604819	6604872	50
PG 16	M 32 x 1,5	1632	36,0	7,0	18,5	6604820	-	50
PG 21	M 32 x 1,5	2132	36,0	8,0	19,5	6604822	6604875	20
PG 21	M 40 x 1,5	2140	42,0	8,0	19,5	6604823	-	20
PG 29	M 40 x 1,5	2940	42,0	8,5	20,0	6604831	6604879	20
PG 29	M 50 x 1,5	2950	55,0	8,5	21,0	6604832	-	20
PG 36	M 50 x 1,5	3650	55,0	8,5	21,0	6604837	6604882	10
PG 42	M 63 x 1,5	4263	65,0	10,0	23,5	6604843	-	5
PG 48	M 63 x 1,5	4863	65,0	10,0	24,5	6604849	-	5
PG 48	M 75 x 1,5	4875	80,0	10,0	24,5	6604850	-	5
oblik B / Form B								
PG 9	M 12 x 1,5	0912	19,0	6,5	10,0	6604809	-	50
PG 11	M 16 x 1,5	1116	22,0	7,0	11,0	6604812	6604865	50
PG 13,5	M 16 x 1,5	1316	24,0	7,0	11,0	6604815	-	50
PG 21	M 25 x 1,5	2125	32,0	8,0	13,0	6604821	-	20
PG 29	M 25 x 1,5	2925	40,0	8,5	14,0	6604829	6604877	20
PG 29	M 32 x 1,5	2932	40,0	8,5	14,0	6604830	-	20
PG 36	M 40 x 1,5	3640	55,0	8,5	15,0	6604836	-	10
PG 42	M 50 x 1,5	4250	58,0	10,0	16,5	6604842	-	5
PG 48	M 50 x 1,5	4850	65,0	10,0	17,0	6604848	-	5

Međukomad
mesing niklani metrički/PG-navoj

Intermediate Parts
nickel-plated brass metric/PG-thread

oblik A / Form A

oblik B / Form B

RoHS

Materijal:
mesing niklani
O-brtva: nitril

Radna temperatura:
-40°C do 100°C

Boje/izvedbe:
- vanjski navoj: metrički
- unutarnji navoj: PG
- šesterokutni

Upotreba:
kao adapter za prijelaz sa metričkog na PG-navoj
- izrada strojeva i aparata
- kućišta

Material:
nickel-plated brass
O-ring: Nitrile

Temperature range:
-40°C to 100°C

Colour(s)/Designs:
- External thread: metric
- Internal thread: PG
- hexagon

Applications:
as adapter between metric and PG-thread
- Machines and apparatus construction
- Housings

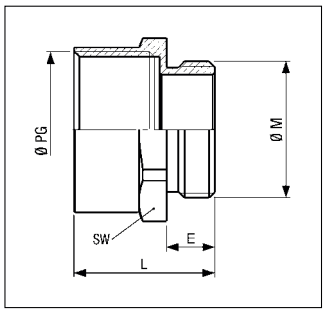

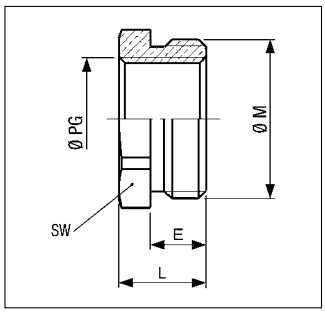

vanjski navoj External thread	unutarnji navoj Internal thread	tip Type	SW mm SW mm	duljina navoja (E) mm Thread length (E) mm	ukupna duljina (L) mm Complete length (L) mm	broj artikla bez O-brtve Art. no. without O-ring	broj artikla sa O-brtvom Art. no. with O-ring	JP kom. PU pcs.
oblik A / Form A								
M 12 x 1,5	PG 7	1207	14,0	7,0	17,0	6604712	6604658	100
M 16 x 1,5	PG 9	1609	18,0	7,0	17,5	6604716	6604660	50
M 16 x 1,5	PG 11	1611	20,0	7,0	18,0	6604715	6604661	50
M 16 x 1,5	PG 13	1613	22,0	7,0	19,5	6604709	6604662	50
M 16 x 1,5	PG 16	1616	24,0	7,0	21,5	6604717	6604663	50
M 20 x 1,5	PG 11	2011	22,0	7,0	18,0	6604720	6604666	50
M 20 x 1,5	PG 13	2013	22,0	7,0	19,5	6604721	6604664	50
M 20 x 1,5	PG 16	2016	24,0	7,0	20,5	6604722	6604667	50
M 20 x 1,5	PG 21	2021	32,0	7,0	22,5	6604708	6604668	50
M 25 x 1,5	PG 16	2516	27,0	8,0	21,5	6604726	6604669	50
M 25 x 1,5	PG 21	2521	32,0	8,0	23,0	6604725	6604670	50
M 25 x 1,5	PG 29	2529	40,0	8,0	25,0	6604727	6604676	20
M 32 x 1,5	PG 21	3221	34,0	8,5	23,5	6604729	6604672	20
M 32 x 1,5	PG 29	3229	40,0	8,5	25,0	6604732	6604681	10
M 40 x 1,5	PG 29	4029	42,0	8,5	25,0	6604734	6604675	10
M 40 x 1,5	PG 36	4036	50,0	8,5	28,0	6604740	6604685	10
M 50 x 1,5	PG 36	5036	52,0	9,5	29,0	6604742	6604678	10
M 50 x 1,5	PG 42	5042	58,0	9,5	31,5	6604750	6604689	5
M 63 x 1,5	PG 42	6342	65,0	10,5	32,5	6604752	6604692	1
M 63 x 1,5	PG 48	6348	65,0	10,5	32,5	6604763	6604694	1
M 75 x 1,5	PG 48	7548	80,0	11,5	34,5	6604764	6604695	1
oblik B / Form B								
M 16 x 1,5	PG 7	1607	18,0	7,0	10,5	6604713	6604659	100
M 20 x 1,5	PG 9	2009	22,0	7,0	11,0	6604719	6604665	50
M 25 x 1,5	PG 9	2509	27,0	8,0	12,0	6604707	6604674	50
M 25 x 1,5	PG 11	2511	27,0	8,0	12,0	6604723	6604671	50
M 25 x 1,5	PG 13,5	2513	27,0	8,0	12,0	6604724	6604673	50
M 32 x 1,5	PG 13,5	3213	34,0	8,5	12,5	6604706	6604677	20
M 32 x 1,5	PG 16	3216	34,0	8,5	12,5	6604728	6604679	20
M 32 x 1,5	PG 21	3221	34,0	8,5	12,5	6604730	6604680	20
M 40 x 1,5	PG 16	4016	42,0	8,5	13,5	6604705	6604682	10
M 40 x 1,5	PG 21	4021	42,0	8,5	13,5	6604733	6604683	10
M 40 x 1,5	PG 29	4029	42,0	8,5	13,5	6604735	6604684	20
M 50 x 1,5	PG 21	5021	52,0	9,5	15,5	6604704	6604686	10
M 50 x 1,5	PG 29	5029	52,0	9,5	15,5	6604741	6604687	10
M 50 x 1,5	PG 36	5036	52,0	9,5	15,5	6604743	6604688	10
M 63 x 1,5	PG 29	6329	65,0	10,5	17,5	6604703	6604690	5
M 63 x 1,5	PG 36	6336	65,0	10,5	17,5	6604751	6604691	5
M 63 x 1,5	PG 42	6342	65,0	10,5	17,5	6604753	6604693	5

Pritisni vijak
mesing niklani
PG-/metrički navoj

Pressure Screws
nickel-plated brass
PG-/metric thread

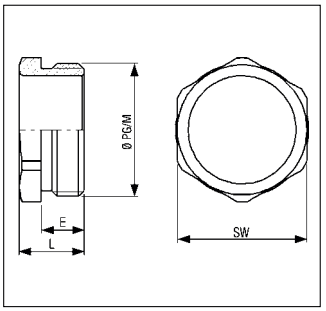

RoHS

Materijal:
mesing niklani

Boje/izvedbe:
• vanjski navoj: PG/metrički

Material:
nickel-plated brass

Colour(s)/Designs:
• External thread: PG/metric

3.3

vanjski navoj External thread	tip Type	unutarnji promjer mm Internal diameter mm	SW mm SW mm	duljina navoja (E) mm Thread length (E) mm	ukupna duljina (L) mm Complete length (L) mm	broj artikla niklano Art. no. nickel-plated	JP kom. PU pcs.
PG / PG							
PG 7	7/1	10,0	13,0	5,5	8,5	6600077	100
PG 9	9/1	12,5	15,0	6,0	9,0	6600093	100
PG 11	11/1	15,0	18,0	6,0	9,0	6600115	100
PG 13,5	13/5/1	17,0	20,0	7,5	10,5	6600131	100
PG 16	16/1	18,5	22,0	7,5	10,5	6600166	100
PG 21	21/1	24,0	28,0	8,0	11,5	6600212	100
PG 29	29/1	32,0	37,0	8,0	12,0	6600298	50
PG 36	36/1	42,0	47,0	9,5	14,0	6600360	50
PG 42	42/1	48,0	54,0	10,0	16,0	6600425	10
PG 48	48/1	52,5	60,0	11,5	17,5	6600484	5
metrički / metric							
M 12 x 1,5		8,5	13,0	5,0	8,0	6600800	100
M 16 x 1,5		12,5	16,0	6,0	9,0	6600801	50
M 20 x 1,5		16,0	20,0	7,0	10,0	6600802	50
M 25 x 1,5		21,0	25,0	7,0	10,0	6600803	50
M 32 x 1,5		28,0	32,0	7,0	10,0	6600804	20
M 40 x 1,5		35,0	40,0	10,0	14,0	6600805	10
M 50 x 1,5		45,0	50,0	10,0	14,0	6600806	5
M 63 x 1,5		57,0	64,0	14,5	18,5	6600807	1

Pritisni vijak ZD
mesing niklani
PG-/metrički navoj

Pressure Screws ZD
nickel-plated brass
PG-/metric thread

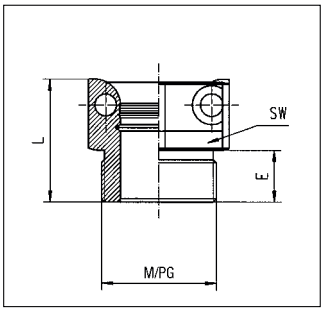

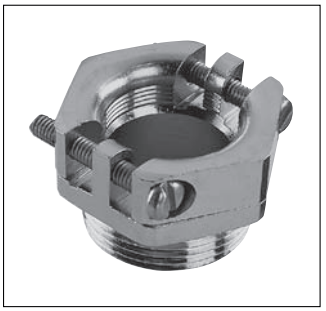

RoHS

Materijal:
mesing niklani

Boje/izvedbe:
- vanjski navoj: PG/metrički

Svojstva:
- sa centralnom zaštitom od izvlačenja kabela
- vrlo široki raspon promjera kablova
- zaštita protiv savijanja
- sa dvije masivne spone od mesinga

Upotreba:
- utikači
- prekidači
- kontrolne ploče

Material:
nickel-plated brass

Colour(s)/Designs:
- External thread: PG/metric

Characteristics:
- with center-functioning strain relief
- very wide clamping range
- bending protection
- with two solid brass saddle clamps

Applications:
- Connectors
- Switches
- Control panels

vanjski navoj External thread	tip Type	za kabel promjera mm Clamping range mm	SW mm SW mm	duljina navoja (E) mm Thread length (E) mm	ukupna duljina (L) mm Complete length (L) mm	broj artikla niklano Art. no. nickel-plated	JP kom. PU pcs.
PG / PG							
PG 7	ZD 7	5,5 - 7,5	16,0	5,5	16,0	4304071	100
PG 9	ZD 9	6,5 - 9,5	19,0	8,0	19,0	4304098	50
PG 11	ZD 11	7,5 - 11,5	22,0	8,0	19,0	4304110	50
PG 13,5	ZD 13	8,5 - 13,5	24,0	6,5	18,0	4304136	50
PG 16	ZD 16	10,5 - 16,5	27,0	10,5	22,5	4304160	25
PG 21	ZD 21	12,0 - 20,5	33,0	10,0	24,0	4304217	25
PG 29	ZD 29	19,0 - 29,5	42,0	10,0	24,0	4304292	10
PG 36	ZD 36	24,0 - 36,5	52,0	9,5	26,0	4304365	10
PG 42	ZD 42	33,0 - 42,5	60,0	10,0	26,5	4304420	5
PG 48	ZD 48	36,0 - 47,5	64,0	11,0	27,5	4304489	5
metrički / metric							
M 12 x 1,5	ZD M12	5,5 - 7,5	16,0	5,5	16,0	4304512	100
M 16 x 1,5/9	ZD M16/9	6,5 - 9,5	19,0	8,0	19,0	4304516	50
M 16 x 1,5/11	ZD M16/11	7,5 - 11,5	22,0	8,0	19,0	4304517	50
M 20 x 1,5/13	ZD M20/13	8,5 - 13,5	24,0	6,5	18,0	4304520	50
M 20 x 1,5/16	ZD M20/16	9,5 - 15,5	27,0	10,5	22,5	4304521	25
M 25 x 1,5	ZD M25	12,0 - 20,5	33,0	10,0	24,0	4304525	25
M 32 x 1,5	ZD M32	18,0 - 27,5	42,0	10,0	24,0	4304532	10

Pritisni vijak DZB
mesing niklani
PG-/metrički navoj

Pressure Screws DZB
nickel-plated brass
PG-/metric thread

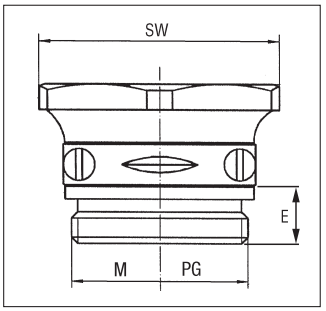

RoHS

Materijal:
mesing niklani

Boje/izvedbe:
- vanjski navoj: PG/metrički

Svojstva:
- sa zaštitom od izvlačenja kabela i zaštitom od savijanja
- vrlo široki raspon promjera kablova
- sa sponama od mesinga

Upotreba:
- utikači
- prekidači
- kontrolne ploče

Material:
nickel-plated brass

Colour(s)/Designs:
- External thread: PG/metric

Characteristics:
- with strain relief and bending protection
- very wide clamping range
- with solid brass saddle clamps

Applications:
- Connectors
- Switches
- Control panels

3.3

vanjski navoj External thread	tip Type	za kabel promjera mm Clamping range mm	SW mm SW mm	duljina navoja (E) mm Thread length (E) mm	ukupna duljina mm Complete length mm	broj artikla niklano Art. no. nickel-plated	JP kom. PU pcs.
PG / PG							
PG 9	DZB 9	6,0 - 9,0	22,0	6,0	20,0	4306090	100
PG 11	DZB 11	8,0 - 11,5	24,0	6,0	21,0	4306112	100
PG 13,5	DZB 13	9,0 - 13,0	28,0	6,5	22,0	4306139	50
PG 16	DZB 16	10,0 - 15,0	30,0	6,5	23,0	4306163	50
PG 21	DZB 21	14,0 - 20,0	38,0	7,0	25,0	4306210	50
PG 29	DZB 29	19,0 - 30,0	50,0	8,5	27,0	4306295	50
metrički / metric							
M 16 x 1,5/9	DZB M16/9	6,0 - 9,0	22,0	6,0	20,0	4306316	50
M 16 x 1,5/11	DZB M16/11	8,0 - 11,5	24,0	6,0	21,0	4306317	50
M 20 x 1,5/13	DZB M20/13	9,0 - 13,0	28,0	6,5	22,0	4306320	50
M 20 x 1,5/16	DZB M20/16	10,0 - 15,0	30,0	6,5	23,0	4306321	50
M 25 x 1,5	DZB M25	14,0 - 20,0	38,0	7,0	25,0	4306325	20
M 32 x 1,5	DZB M32	17,0 - 28,0	50,0	8,5	27,0	4306332	20

Pritisni vijak ZED
mesing niklani
PG-/metrički navoj

Pressure Screws ZED
nickel-plated brass
PG-/metric thread

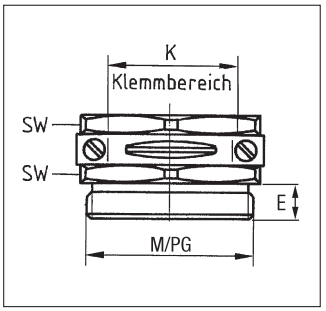

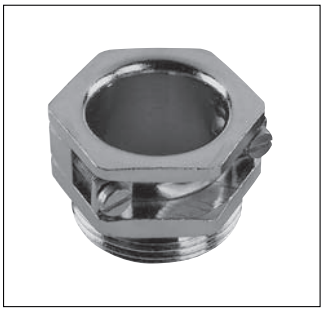

RoHS

Materijal:
mesing niklani

Boje/izvedbe:
- vanjski navoj: PG/metrički

Svojstva:
- sa zaštitom od izvlačenja kabela
- sa sponama od mesinga

Upotreba:
- utikači
- prekidači
- kontrolne ploče

Material:
nickel-plated brass

Colour(s)/Designs:
- External thread: PG/metric

Characteristics:
- with strain relief
- with solid brass saddle clamps

Applications:
- Connectors
- Switches
- Control panels

vanjski navoj External thread	tip Type	za kabel promjera (K) mm Clamping range (K) mm	SW mm SW mm	duljina navoja (E) mm Thread length (E) mm	ukupna duljina mm Complete length mm	broj artikla niklano Art. no. nickel-plated	JP kom. PU pcs.
PG / PG							
PG 7	ZED 607	6,0 - 9,5	17,0	5,5	19,0	4307003	100
PG 9	ZED 609	6,0 - 9,5	17,0	5,5	19,0	4307011	100
PG 11	ZED 710	7,0 - 11,5	20,0	6,5	20,0	4307020	100
PG 13,5	ZED 1014	9,0 - 13,0	22,0	6,5	20,5	4307038	50
PG 16	ZED 1015	10,0 - 15,0	24,0	6,5	20,5	4307046	50
PG 21	ZED 1418	13,0 - 20,0	30,0	7,5	21,5	4307054	50
PG 29	ZED 2027	20,0 - 29,0	40,0	8,5	24,0	4307062	50
metrički / metric							
M 12 x 1,5	ZED M12	6,0 - 8,0	17,0	7,0	20,5	4307612	50
M 16 x 1,5/9	ZED M16/9	6,0 - 9,5	17,0	7,0	20,5	4307616	50
M 16 x 1,5/11	ZED M16/11	7,0 - 11,5	20,0	7,0	20,5	4307617	50
M 20 x 1,5/13	ZED M20/13	9,0 - 13,0	22,0	7,0	21,0	4307620	50
M 20 x 1,5/16	ZED M20/16	10,0 - 15,0	24,0	7,0	21,0	4307621	50
M 25 x 1,5	ZED M25	13,0 - 20,0	30,0	8,0	22,0	4307625	20
M 32 x 1,5	ZED M32	19,0 - 27,0	40,0	8,5	24,0	4307632	20

Čep
polikarbonat šesterokutni PG-navoj

Plugs
Polycarbonate hexagon PG-thread

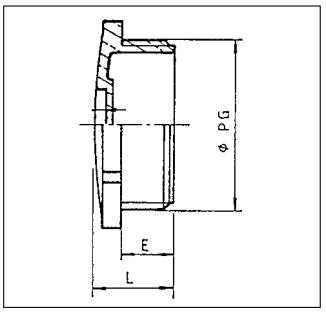

RoHS

Materijal:
polikarbonat

Radna temperatura:
-40°C do 135°C

Boje/izvedbe:
- svjetlosiva
- vanjski navoj: PG
- šesterokutan, sa prorezom

Upotreba:
- razvodni ormari
- spojne kutije
- priključne kutije

Material:
Polycarbonate

Temperature range:
-40°C to 135°C

Colour(s)/Designs:
- light grey
- External thread: PG
- hexagon, with slot

Applications:
- Switch cabinet building
- Junction box
- Connection box

3.3

vanjski navoj External thread	Tip Type	SW mm SW mm	duljina navoja (L) mm Thread length (L) mm	ukupna duljina (E) mm Complete length (E) mm	broj artikla svjetlosiva RAL 7035 Art. no. light grey RAL 7035	JP kom. PU pcs.
PG 7	BOU 7M	15,0	6,5	10,0	7002076	50
PG 9	BOU 9M	19,0	7,0	10,5	7002092	50
PG 11	BOU 11M	22,0	8,0	11,5	7002114	100
PG 13,5	BOU 13M	24,0	9,0	12,5	7002130	50
PG 16	BOU 16M	27,0	9,0	12,5	7002165	50
PG 21	BOU 21M	32,0	10,0	14,5	7002211	20
PG 29	BOU 29M	41,0	12,0	18,0	7002297	25
PG 36	BOU 36M	55,0	14,0	21,5	7002360	10
PG 42	BOU 42M	60,0	15,5	24,5	7002424	1
PG 48	BOU 48M	65,0	16,0	26,0	7002483	1

Čep
poliamid
okrugli
PG-/metrički navoj

Plugs
Polyamide
round
PG-/metric thread

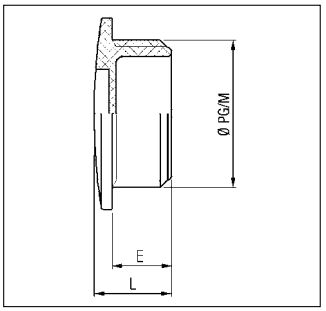

RoHS

Materijal:
poliamid
25 % ojačan staklenim vlaknima

Radna temperatura:
-30°C do 120°C

Boje/izvedbe:
- svjetlosiva, srebrnosiva, crna
- vanjski navoj: PG/metrički
- okrugli, sa prorezom

Upotreba:
- razvodni ormari
- spojne kutije
- priključne kutije

Material:
Polyamide
25 % glassfiber reinforced

Temperature range:
-30°C to 120°C

Colour(s)/Designs:
- light grey, silver grey, jet black
- External thread: PG/metric
- round, with slot

Applications:
- Switch cabinet building
- Junction box
- Connection box

vanjski navoj External thread	promjer mm Diameter mm	duljina navoja (E) mm Thread length (E) mm	ukupna duljina (L) mm Complete length (L) mm	broj artikla svjetlosiva RAL 7035 Art. no. light grey RAL 7035	broj artikla srebrnosiva RAL 7001 Art. no. silver grey RAL 7001	broj artikla crna RAL 9005 Art. no. jet black RAL 9005	JP kom. PU pcs.
PG / PG							
PG 7	15,0	6,0	8,0	7215517	-	-	100
PG 9	19,0	6,0	9,0	7215525	-	-	100
PG 11	22,0	6,0	9,0	7215533	-	-	100
PG 13,5	25,0	6,0	9,5	7215541	-	-	100
PG 16	27,0	6,0	9,5	7215550	-	-	100
PG 21	33,0	8,0	11,0	7215568	-	-	100
PG 29	44,0	8,0	12,0	7215576	-	-	100
PG 36	55,0	10,0	15,0	7215584	-	-	50
PG 42	62,0	10,0	16,0	7215592	-	-	50
PG 48	69,0	12,0	18,5	7215606	-	-	50
metrički / metric							
M 12 x 1,5	16,0	6,0	8,0	7217312	7217412	7217512	50
M 16 x 1,5	20,0	6,0	8,0	7217316	7217416	7217516	50
M 20 x 1,5	26,0	8,0	10,5	7217320	7217420	7217520	50
M 25 x 1,5	32,0	8,0	11,0	7217325	7217425	7217525	20
M 32 x 1,5	40,0	10,0	13,5	7217332	7217432	7217532	20
M 40 x 1,5	48,0	10,0	14,0	7217340	7217440	7217540	20
M 50 x 1,5	55,0	12,0	17,0	7217350	7217450	7217550	10
M 63 x 1,5	70,0	12,0	18,0	7217363	7217463	7217563	5

Čep
mesing niklani
okrugli
PG-/metrički/plinski navoj

Plugs
nickel-plated brass
round
PG-/metric/Gas thread

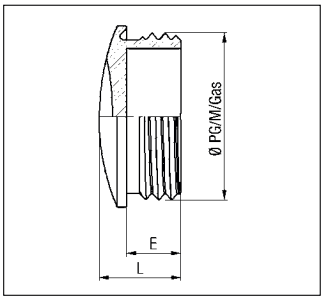

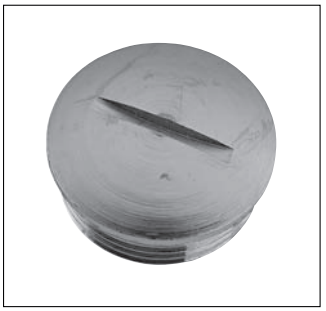

RoHS

Materijal:
mesing niklani

Radna temperatura:
-40°C do 135°C

Boje/izvedbe:
• vanjski navoj: PG/metrički/plinski

Svojstva:
• okrugli, sa prorezom

Upotreba:
• izrada strojeva i aparata
• proizvodnja elektromotora

Material:
nickel-plated brass

Temperature range:
-40°C to 135°C

Colour(s)/Designs:
• External thread: PG/metric/Gas

Characteristics:
• round, with slot

Applications:
• Machine and apparatus construction
• Drives

3.3

vanjski navoj External thread	tip Type	promjer mm Diameter mm	duljina navoja (E) mm Thread length (E) mm	ukupna duljina (L) mm Complete length (L) mm	broj artikla bez O-brtve Art. no. without O-ring	JP kom. PU pcs.
PG / PG						
PG 7	7006	14,0	5,0	7,0	6700071	50
PG 9	9006	17,0	6,0	8,0	6700098	50
PG 11	1106	20,0	6,0	8,0	6700110	50
PG 13,5	1356	22,0	6,5	8,5	6700136	50
PG 16	1606	24,0	6,5	9,0	6700160	50
PG 21	2106	30,0	7,0	10,0	6700217	20
PG 29	2906	39,0	8,0	11,0	6700292	20
PG 36	3606	50,0	9,0	14,0	6700365	10
PG 42	4206	57,0	10,0	15,0	6700420	10
PG 48	4806	64,0	10,0	15,0	6700489	10
metrički / metric						
M 12 x 1,5	1236	14,0	5,0	7,0	6701612	50
M 16 x 1,5	1636	18,0	6,0	8,0	6701616	50
M 20 x 1,5	2036	22,0	6,5	8,5	6701620	50
M 25 x 1,5	2536	27,0	7,0	10,0	6701625	50
M 32 x 1,5	3236	34,0	8,0	11,0	6701632	50
M 40 x 1,5	4036	44,0	9,0	13,0	6701640	50
M 50 x 1,5	5036	54,0	10,0	14,5	6701650	10
M 63 x 1,5	6336	67,0	10,0	15,0	6701663	10
plinski / Gas						
R 3/8"	3806	17,0	6,0	9,0	6701388	50
R 1/2"	1206	22,0	6,5	9,5	6701124	50
R 5/8"	5806	24,0	6,5	9,5	6701582	25
R 3/4"	3406	28,0	7,0	10,0	6701345	25
R 1"	1006	35,0	8,0	12,0	6701108	10
R 1 1/4"	1146	44,0	8,5	13,0	6701140	10
R 1 1/2"	1126	50,0	9,0	15,0	6701116	10
R 2"	2006	64,0	10,0	16,0	6701205	10

Čep
mesing niklani
sa montiranom O-brtvom
okrugli
PG-/metrički navoj

Plugs
nickel-plated brass
with pre-mounted O-ring
round
PG-/metric thread

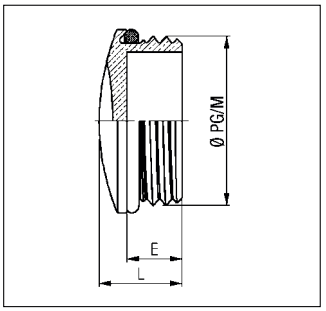

RoHS | IP 68

Materijal:
mesing niklani
O-brtva: nitril

Radna temperatura:
-25°C do 120°C

Boje/izvedbe:
- vanjski navoj: PG/metrički
- okrugli, sa prorezom

Upotreba:
- izrada strojeva i aparata
- proizvodnja elektromotora

Material:
nickel-plated brass
O-ring: Nitrile

Temperature range:
-25°C to 120°C

Colour(s)/Designs:
- External thread: PG/metric
- round, with slot

Applications:
- Machine and apparatus construction
- Drives

vanjski navoj External thread	tip Type	promjer mm Diameter mm	duljina navoja (E) mm Thread length (E) mm	ukupna duljina (L) mm Complete length (L) mm	broj artikla sa O-brtvom Art. no. with O-ring	JP kom. PU pcs.
PG / PG						
PG 7	7006 Hi	14,0	5,0	8,0	6700507	50
PG 9	9006 Hi	17,0	6,0	9,0	6700509	50
PG 11	1106 Hi	20,0	6,0	9,0	6700511	50
PG 13,5	1356 Hi	22,0	6,5	9,5	6700513	50
PG 16	1606 Hi	24,0	6,5	9,5	6700516	25
PG 21	2106 Hi	30,0	7,0	11,0	6700521	25
PG 29	2906 Hi	39,0	8,0	12,0	6700529	20
PG 36	3606 Hi	50,0	9,0	15,0	6700536	10
PG 42	4206 Hi	57,0	10,0	16,0	6700542	10
PG 48	4806 Hi	64,0	10,0	16,0	6700548	10
metrički / metric						
M 12 x 1,5	1206 Hi	14,0	5,0	7,0	6700612	50
M 16 x 1,5	1606 Hi	18,0	6,0	8,0	6700616	100
M 20 x 1,5	2006 Hi	22,0	6,5	8,5	6700620	50
M 25 x 1,5	2556 Hi	27,0	7,0	10,0	6700625	100
M 32 x 1,5	3206 Hi	34,0	8,0	11,0	6700632	50
M 40 x 1,5	4006 Hi	44,0	9,0	13,0	6700640	50
M 50 x 1,5	5006 Hi	54,0	10,0	14,5	6700650	25
M 63 x 1,5	6306 Hi	67,0	10,0	15,0	6700663	25

Čep
šesterokutni
mesing niklani
PG-/metrički navoj

Plugs
hexagon
nickel-plated brass
PG-/metric thread

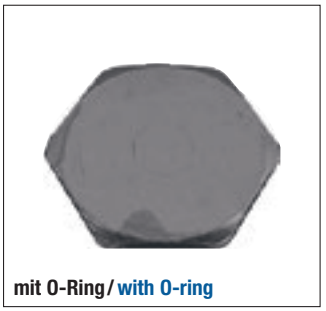

mit O-Ring / with O-ring

MS | IP 68

Materijal:
mesing niklani
O-brtva: nitril

Radna temperatura:
-25°C do 120°C

Boje/izvedbe:
- vanjski navoj: PG/metrički
- šesterokutni, sa prorezom
- dostupan i u izvedbi od nehrđajućeg čelika M12 - M63

Material:
nickel-plated brass
O-ring: Nitrile

Temperature range:
-25°C to 120°C

Colour(s)/Designs:
- External thread: PG/metric
- Round, with slot
- Also available in stainless steel M12 - M63

3.3

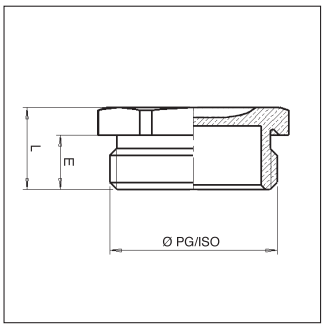

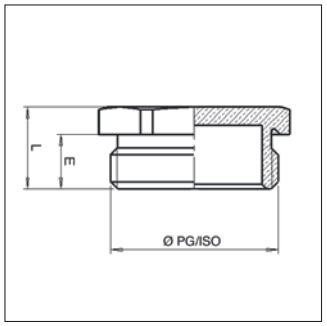

vanjski navoj External thread	tip Type	SW mm SW mm	duljina navoja (E) mm Thread length (E) mm	ukupna duljina (L) mm Complete length (L) mm	broj artikla sa O-brtvom Art. no. with O-ring	JP kom. PU pcs.
PG / PG						
PG 7	4607	14,0	5,0	8,0		50
PG 9	4609	17,0	6,0	9,0		50
PG 11	4611	19,0	6,0	9,0		50
PG 13,5	4613	21,0	6,5	9,5		50
PG 16	4616	23,0	6,5	9,5		25
PG 21	4621	29,0	7,0	11,0		20
PG 29	4629	39,0	8,0	12,0		15
PG 36	4636	50,0	9,0	14,0		10
PG 42	4642	58,0	10,0	15,0		10
PG 48	4648	64,0	10,0	16,0		10
metrički bez proreza / metric without Slot						
M 12 x 1,5		14,0	7,0	10,0	6702835	50
M 16 x 1,5		17,0	7,0	10,0	6702836	50
M 20 x 1,5		23,0	7,5	10,0	6702837	50
M 25 x 1,5		29,0	8,0	11,5	6702838	20
M 32 x 1,5		39,0	8,5	12,5	6702839	20
M 40 x 1,5		45,0	8,5	12,5	6702840	20
M 50 x 1,5		58,0	9,5	14,5	6702850	10
M 63 x 1,5		70,0	10,5	17,5	6702863	5

Prirubnica kutna 90°
poliamid
PG-/metrički navoj

Flange angle 90°
Polyamide
PG-/metric thread

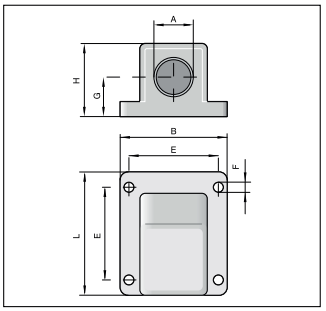

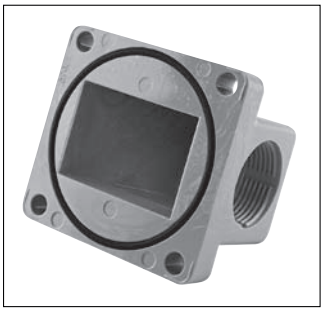

RoHS | IP 68

Materijal:
poliamid 6

Radna temperatura:
-20°C do 100°C

Boje/izvedbe:
- siva RAL 7032
- spojni navoj: PG/metrički

Material:
Polyamide 6

Temperature range:
-20°C to 100°C

Colour(s)/Designs:
- grey RAL 7032
- Connecting thread: PG/metric

spojni navoj Connecting thread	tip Type	B mm B mm	G mm G mm	L mm L mm	E mm E mm	F mm F mm	visina (H) mm Height (H) mm	broj artikla siva Art. no. grey	JP kom. PU pcs.
PG / PG									
PG 9	FWK 9	45,0	15,5	50,0	37,0	4,5	29,0	7302096	10
PG 11	FWK 11	45,0	15,0	50,0	37,0	4,5	29,0	7302118	10
PG 13,5	FWK 13	53,0	20,0	56,0	44,0	5,5	35,0	7302134	10
PG 16	FWK 16	53,0	20,0	56,0	44,0	5,5	35,0	7302169	10
PG 21	FWK 21	68,0	24,0	68,0	55,0	5,5	43,0	7302215	5
PG 29	FWK 29	70,0	26,0	74,0	60,0	5,5	52,0	7302290	5
PG 36	FWK 36	88,0	34,0	93,0	72,0	6,5	68,0	7302363	2
metrički / metric									
M 16 x 1,5	FW 216	45,0	15,5	50,0	37,0	4,5	29,0	7302416	10
M 20 x 1,5	FW 220	53,0	20,0	56,0	44,0	5,5	35,0	7302420	10
M 25 x 1,5	FW 225	68,0	24,0	68,0	55,0	5,5	43,0	7302425	10
M 32 x 1,5	FW 232	70,0	26,0	74,0	60,0	5,5	52,0	7302432	5
M 40 x 1,5	FW 240	70,0	26,0	74,0	60,0	5,5	52,0	7302440	5
M 50 x 1,5	FW 250	88,0	34,0	93,0	72,0	6,5	68,0	7302450	2

Prirubnica kutna 90°
metalna
PG-/metrički navoj

Flange angle 90°
Zinc
PG-/metric thread

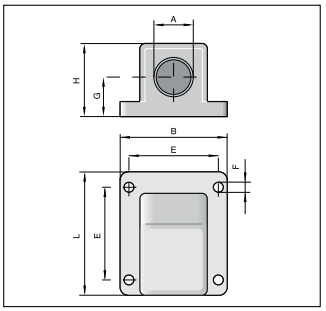

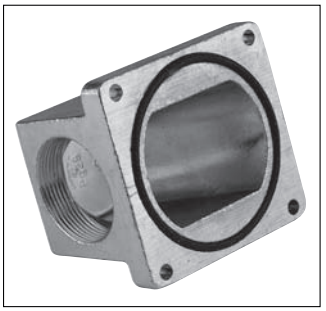

RoHS | IP 68

Materijal:
cink

Radna temperatura:
-30°C do 100°C

Boje/izvedbe:
- spojni navoj: PG/metrički
- kratka izvedba
- tlačni lijev

Material:
Zinc

Temperature range:
-30°C to 100°C

Colour(s)/Designs:
- Connecting thread: PG/metric
- short version
- die-casting

3.3

spojni navoj Connecting thread	tip Type	B mm B mm	G mm G mm	L mm L mm	E mm E mm	F mm F mm	visina (H) mm Height (H) mm	broj artikla cink Art. no. Zinc	JP kom. PU pcs.
PG / PG									
PG 9	9 W	45,0	15,5	48,0	37,0	4,3	30,0	6303099	10
PG 11	11 W	45,0	15,5	48,0	37,0	4,3	30,0	6303110	10
PG 13,5	13 W	53,0	19,0	56,0	44,0	5,5	35,0	6303137	10
PG 16	16 W	53,0	19,0	56,0	44,0	5,5	35,0	6303161	10
PG 21	21 W	63,0	23,0	65,0	54,0	5,5	42,0	6303218	5
PG 29	29 W	71,0	27,0	75,0	60,0	5,5	52,0	6303293	5
PG 36	36 W	89,0	34,0	94,0	72,0	6,5	69,0	6303366	5
PG 42	42 W	96,0	36,5	114,0	84,0	6,5	74,0	6303420	5
PG 48	48 W	96,0	37,0	114,0	84,0	6,5	74,0	6303480	1
metrički / metric									
M 16 x 1,5	216 W	45,0	15,5	48,0	37,0	4,3	30,0	6303516	10
M 20 x 1,5	220 W	53,0	18,0	56,0	44,0	5,5	35,0	6303520	10
M 25 x 1,5	225 W	63,0	22,5	65,0	54,0	5,5	42,0	6303525	10
M 32 x 1,5	232 W	70,0	27,0	75,0	60,0	5,5	52,0	6303532	5
M 40 x 1,5	240 W	71,0	27,0	75,0	60,0	5,5	52,0	6303540	5
M 50 x 1,5	250 W	89,0	33,5	93,0	72,0	6,5	69,0	6303550	2
M 63 x 1,5	263 W	96,0	37,0	114,0	84,0	6,5	74,0	6303563	2

Koljeno 90°
sa O-brtvom i maticom metrički navoj

Elbow 90°
with O-ring and Lock nut metric thread

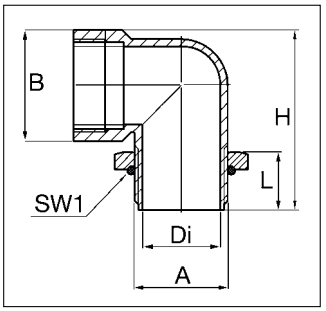

RoHS | IP 68

Materijal:
- 1: koljeno: cink, tlačni lijev, niklano
- 2: O-brtva: nitril NBR
- 3: matica: mesing niklani

Radna temperatura:
-20°C do 100°C

Boje/izvedbe:
- spojni navoj: metrički
- unutarnji navoj: metrički

Svojstva:
- matica omogućuje podešavanje u bilo kojoj poziciji

Upotreba:
- izrada strojeva i aparata
- proizvodnja elektromotora

Material:
- 1: Elbow: Zinc die-casting, nickel-plated
- 2: O-ring: Nitrile NBR
- 3: Lock nut: nickel-plated brass

Temperature range:
-20°C to 100°C

Colour(s)/Designs:
- Connecting thread: metric
- Internal thread: metric

Characteristics:
- Lock-nut allows adjustment in any position

Applications:
- Machine and apparatus construction
- Drives

spojni navoj Connecting thread	L mm L mm	SW 1 mm SW 1 mm	H mm H mm	Di mm Di mm	broj artikla cink Art. no. Zinc	JP kom. PU pcs.
M 16 x 1,5	16,0	22,0	38,0	12,2	6300240	100
M 20 x 1,5	16,0	26,0	42,0	16,0	6300241	50
M 25 x 1,5	16,5	34,0	48,5	21,0	6300242	50
M 32 x 1,5	18,5	40,0	57,5	27,6	6300243	25
M 40 x 1,5	19,0	50,0	67,0	35,0	6300244	10

Brtveni čep
LDPE glatki
sa/bez otvora
za prolaz kabela
metrički navoj

Plug Sealing clamp
LDPE smooth
with/without drilling
metric thread

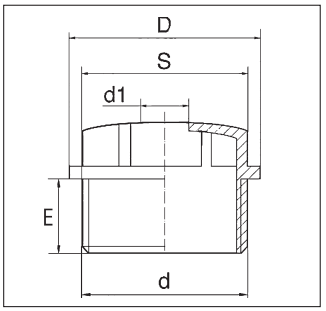

RoHS | IP 54

Materijal:
LDPE glatki

Radna temperatura:
-30°C do 90°C

Boje/izvedbe:
- svjetlosiva, crna
- navoj: metrički
- zatvorena izvedba za bušenje ili probijanje
- sa otvorom (otvorena izvedba)
- šesterokutan

Upotreba:
- jednostavan ulaz kabela kad god nije potrebna zaštita od izvlačenja

Material:
LDPE smooth

Temperature range:
-30°C to 90°C

Colour(s)/Designs:
- light grey, jet black
- Thread: metric
- shutted form to bore or to puncture
- with drilling (forthrightly form)
- hexagon

Applications:
- Simple cable entry wherever no strain relief is required.

3.3

navoj (d) / Thread (d)	brtveni promjer (d1) mm / Sealing range (d1) mm	SW (S) mm / SW (S) mm	duljina navoja (E) mm / Thread length (E) mm	ukupna visina mm / Complete height mm	Ø prirubnice (D) mm / Ø Flange (D) mm	Ø otvora mm / Ø Drilling mm	broj artikla svjetlosiva RAL 7035 bez otvora / Art. no. light grey RAL 7035 without drilling	Art.-Nr. tiefschwarz RAL 9005 bez otvora / Art. no. jet black RAL 9005 without drilling	JP kom. / PU pcs.
M 12 x 1,5	3,5 - 5,0	10,0	8,4	15,0	15,0	4,0	7006812	7006870	50
M 16 x 1,5	5,0 - 10,0	15,0	10,0	17,0	20,0	5,5	7006816	7006871	50
M 20 x 1,5	8,0 - 13,5	19,0	12,0	20,0	24,0	8,0	7006820	7006872	50
M 25 x 1,5	9,0 - 16,0	24,0	12,0	22,0	28,0	8,5	7006825	7006873	50
M 32 x 1,5	11,0 - 22,0	30,0	14,0	25,0	37,0	10,0	7006832	7006874	25
M 40 x 1,5	17,0 - 24,0	37,0	16,0	28,0	45,0	16,0	7006840	7006875	20
M 50 x 1,5	22,0 - 35,0	46,0	18,0	31,0	55,5	20,0	7006850	7006876	10
M 63 x 1,5	24,0 - 43,0	56,0	20,0	35,0	68,5	23,0	7006863	7006877	5

navoj (d) / Thread (d)	brtveni promjer (d1) mm / Sealing range (d1) mm	SW (S) mm / SW (S) mm	duljina navoja (E) mm / Thread length (E) mm	ukupna visina mm / Complete height mm	Ø prirubnice (D) mm / Ø Flange (D) mm	Ø otvora mm / Ø Drilling mm	broj artikla svjetlosiva RAL 7035 s otvorom / Art. no. light grey RAL 7035 with drilling	JP kom. / PU pcs.
M 12 x 1,5	3,5 - 5,0	10,0	8,4	15,0	15,0	4,0	7006880	50
M 16 x 1,5	5,0 - 10,0	15,0	10,0	17,0	20,0	5,5	7006881	50
M 20 x 1,5	8,0 - 13,5	19,0	12,0	20,0	24,0	8,0	7006882	50
M 25 x 1,5	9,0 - 16,0	24,0	12,0	22,0	28,0	8,5	7006883	50
M 32 x 1,5	11,0 - 22,0	30,0	14,0	25,0	37,0	10,0	7006884	25
M 40 x 1,5	17,0 - 24,0	37,0	16,0	28,0	45,0	16,0	7006885	20
M 50 x 1,5	22,0 - 35,0	46,0	18,0	31,0	55,5	20,0	7006886	10
M 63 x 1,5	24,0 - 43,0	56,0	20,0	35,0	68,5	23,0	7006887	5

O-brtva
perbunan
PG-/metrički/plinski navoj

O-rings
Perbunan
PG-/metric/Gas thread

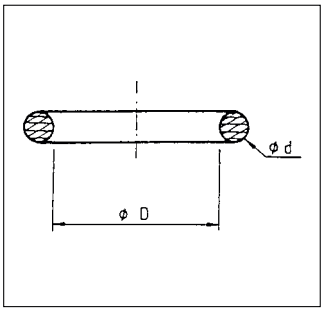

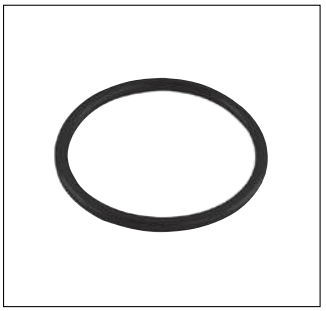

RoHS

Materijal:
perbunan

Radna temperatura:
-25°C do 120°C

Boje/izvedbe:
- crna
- spojni navoj: PG/metrički/plinski

Upotreba:
- za sigurno brtvljenje kućišta od ulja, prašine i vode. Za spojni navoj uvodnice ili sličnih dijelova.

Material:
Perbunan

Temperature range:
-25°C to 120°C

Colour(s)/Designs:
- black
- Connecting thread: PG/metric/Gas

Applications:
- For safe sealing of housing against oil, dust and water. For connection thread of a gland or similar parts.

spojni navoj / Connecting thread			unutarnji promjer mm	debljina mm	broj artikla crna	JP kom.
PG	metrički	plinski				
PG	metric	Gas	Internal Diameter mm	Thickness mm	Art. no. black	PU pcs.
PG 7	M 12	R 1/4"	10,0	1,5	8112070	1000
PG 9	M 16	R 3/8"	13,0	1,5	8112096	1000
PG 11			16,0	1,5	8112118	1000
PG 13,5	M 20	R 1/2"	18,0	1,5	8112134	1000
PG 16		R 5/8"	20,0	1,5	8112169	1000
PG 21			25,0	2,0	8112215	1000
	M 25	R 3/4"	21,95	1,78	8112250	100
	M 32	R 1"	28,0	2,0	8112320	100
PG 29		R 1 1/8"	33,0	2,0	8112290	1000
	M 40	R 1 1/4"	37,0	2,0	8112400	100
PG 36		R 1 1/2"	43,0	2,0	8112363	1000
	M 50	R 1 3/4"	48,0	2,0	8112500	100
PG 42			50,0	2,0	8112428	1000
PG 48	M 63	R 2"	55,0	2,0	8112630	1000
	M 75		67,65	2,62	8112675	100

Brtva plosnata
neopren
PG-/metrički navoj

Flat Sealings
Neoprene
PG-/metric thread

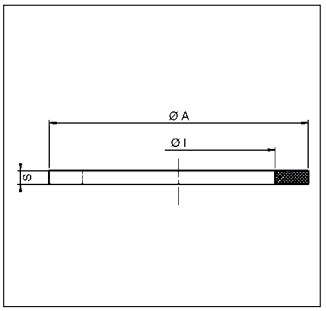

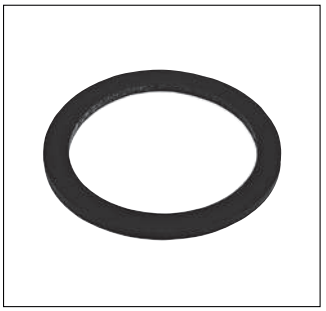

RoHS

Materijal:
neopren

Radna temperatura:
-40°C do 100°C

Boje/izvedbe:
- crna
- spojni navoj: PG/metrički

Upotreba:
- odgovara za PG-/metričke kabelske uvodnice, kao i za pribor

Material:
Neoprene

Temperature range:
-40°C to 100°C

Colour(s)/Designs:
- black
- Connecting thread: PG/metric

Applications:
- suitable for PG-/metric Cable Glands as well as Accessories

3.3

spojni navoj Connecting thread	tip Type	vanjski promjer (A) mm External diameter (A) mm	unutarnji promjer (I) mm Internal diameter (I) mm	debljina (S) mm Thickness (S) mm	broj artikla crna Art. no. black	JP kom. PU pcs.
PG / PG						
PG 7		17,0	11,3	1,2	8113301	100
PG 9		20,0	13,9	1,2	8113302	100
PG 11		23,0	17,1	1,2	8113303	100
PG 13,5		25,0	19,0	1,2	8113304	100
PG 16		27,0	21,0	1,2	8113305	100
PG 21		34,0	26,6	1,5	8113306	50
PG 29		45,0	35,2	1,5	8113307	50
PG 36		56,0	45,2	1,5	8113308	50
PG 42		67,0	52,2	1,5	8113309	50
PG 48		72,0	57,7	1,5	8113310	50
metrički / metric						
M 12 x 1,5	12 F	15,0	10,0	1,2	8113490	100
M 16 x 1,5	16 F	20,0	13,9	1,2	8113302	100
M 20 x 1,5	20 F	24,0	18,0	1,2	8113492	100
M 25 x 1,5	25 F	30,0	23,0	1,2	8113493	100
M 32 x 1,5	32 F	40,0	30,0	1,5	8113494	100
M 40 x 1,5	40 F	48,0	38,0	1,5	8113495	100
M 50 x 1,5	50 F	58,0	48,0	1,5	8113496	100
M 63 x 1,5	63 F	75,0	61,0	1,5	8113497	100
M 75 x 1,5	75 F	90,0	73,0	1,5	8113498	100

Brtva
neopren
obična
PG-/metrički navoj

Sealing Rings
Neoprene
plain
PG-/metric thread

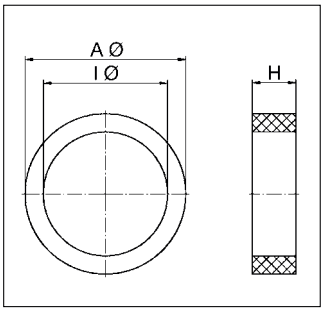

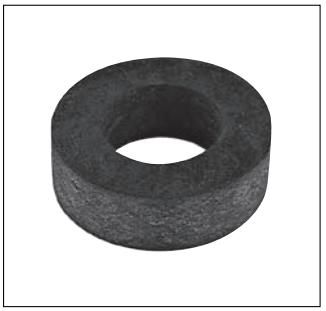

RoHS

Materijal:
neopren

Radna temperatura:
-30°C do 100°C

Boje/izvedbe:
- crna
- spojni navoj: PG/metrički

Napomena:
brtve označene sa * montirane su unutar standardnih kabelskih uvodnica

Upotreba:
- odgovara za PG-/metričke konusne kabelske uvodnice

Material:
Neoprene

Temperature range:
-30°C to 100°C

Colour(s)/Designs:
- black
- Connection thread: PG/metric

Note:
(*) marked types are assembled within the standard cable glands

Applications:
- suitable for PG-/metric Conus-Cable glands

spojni navoj / Connecting thread		tip	vanjski promjer (A) mm	unutarnji promjer (I) mm	visina (H) mm	broj artikla crna obična	JP kom.
PG	metrički						
PG	metric	Type	External diameter (A) mm	Internal diameter (I) mm	Height (H) mm	Art. no. black plain	PU pcs.
PG 7	M 12	307/5	10,7	5,0	5,0	8103011	1
PG 7	M 12	307/6*	10,7	6,0	5,0	8103020	1
PG 7	M 12	307/7	10,7	7,0	5,0	8103038	1
PG 9	M 16	309/6	13,3	6,0	5,5	8103054	1
PG 9	M 16	309/7*	13,3	7,0	5,5	8103062	1
PG 9	M 16	309/8	13,3	8,0	5,5	8103070	1
PG 9	M 16	309/9	13,3	9,0	5,5	8103089	1
PG 11	M 16 - M 20	311/5	16,5	5,0	6,0	8103097	1
PG 11	M 16 - M 20	311/7	16,5	7,0	6,0	8103119	1
PG 11	M 16 - M 20	311/9*	16,5	9,0	6,0	8103127	1
PG 11	M 16 - M 20	311/10	16,5	10,0	6,0	8103135	1
PG 11	M 16 - M 20	311/11	16,5	11,0	6,0	8103143	1
PG 13,5	M 20 - M 25	313/7	18,3	7,0	6,5	8103151	1
PG 13,5	M 20 - M 25	313/9	18,3	9,0	6,5	8103160	1
PG 13,5	M 20 - M 25	313/11*	18,3	11,0	6,5	8103186	1
PG 13,5	M 20 - M 25	313/2	18,3	12,0	6,5	8103194	1
PG 16	M 20 - M 25	316/9	20,4	9,0	7,5	8103208	1
PG 16	M 20 - M 25	316/10	20,4	10,0	7,5	8103216	1
PG 16	M 20 - M 25	316/13*	20,4	13,0	7,5	8103232	1
PG 16	M 20 - M 25	316/15	20,4	15,0	7,5	8103240	1
PG 21	M 25 - M 32	321/14	25,9	14,0	8,0	8103259	1
PG 21	M 25 - M 32	321/16*	25,9	16,0	8,0	8103356	1
PG 29	M 32	329/25*	34,7	25,0	9,5	8103283	1

Brtva
neopren
višeslojna
PG-/metrički navoj

Sealing Rings
Neoprene
punchable
PG-/metric thread

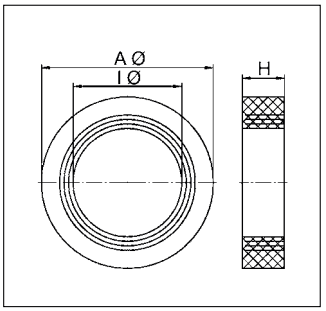

RoHS

Materijal:
neopren

Radna temperatura:
-25°C do 100°C

Boje/izvedbe:
- crna
- spojni navoj: PG/metrički
- višeslojna

Svojstva:
- brtva može biti pojedinačno prilagođena različitim promjerima kabela

Upotreba:
- odgovara za PG-/metričke konusne kabelske uvodnice

Material:
Neoprene

Temperature range:
-25°C to 100°C

Colour(s)/Designs:
- black
- Connection thread: PG/metric
- punchable

Characteristics:
- Rings can be individually adapted to various cable diameters

Applications:
- suitable for PG-/metric Conus-Cable glands

3.3

spojni navoj Connecting thread PG	metrički	tip	vanjski promjer (A) mm	Dimenzije (I) mm	visina mm	broj artikla crna višeslojna	JP kom.
PG	metric	Type	External diameter (A) mm	Grading (I) mm	Height mm	Art. no. black punchable	PU pcs.
PG 9	M 16	309 UNEO	13,3	5,0 - 7,5 - 10,0	5,5	8107092	1
PG 11	M 16 - M 20	311 UNEO	16,5	7,5 - 10,0 - 12,5	6,0	8107114	1
PG 13,5	M 20 - M 25	313 UNEO	18,3	7,5 - 10,0 - 12,5	6,0	8107130	1
PG 16	M 20 - M 25	316 UNEO	20,4	7,5 - 10,0 - 12,5 - 15,0	7,0	8107165	1
PG 21	M 25 - M 32	321 UNEO	25,9	10,0 - 13,0 - 16,0 - 19,0	8,0	8107211	1
PG 29	M 32	329 UNEO	34,7	18,0 - 21,0 - 24,0 - 27,0	9,5	8107297	1
PG 36	M 40	336 UNEO	44,7	24,0 - 27,0 - 30,0 - 33,0	12,0	8107360	1
PG 42	M 50	342 UNEO	51,7	30,0 - 33,0 - 36,0 - 39,0	14,0	8107424	1
PG 48	M 63	348 UNEO	56,9	36,0 - 39,0 - 42,0 - 45,0	14,0	8107483	1

Pritisni prsten
čelik pocinčani
PG-/metrički navoj

Pressure Rings
galvanized steel
PG-/metric thread

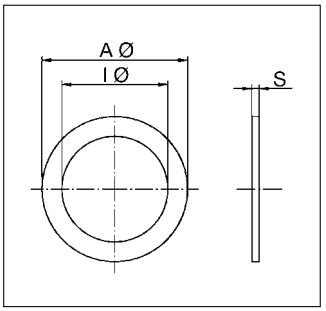

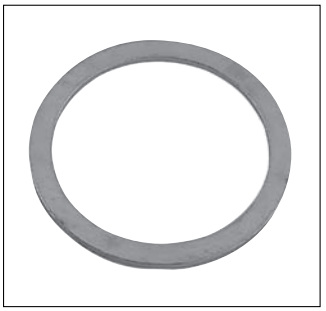

RoHS

Materijal:
čelik pocinčani

Boje/izvedbe:
- spojni navoj: PG/metrički

Upotreba:
- odgovara za PG-/metričke konusne kabelske uvodnice

Material:
galvanized steel

Colour(s)/Designs:
- Connecting thread: PG/metric

Applications:
- suitable for PG-/metric Conus-Cable glands

spojni navoj Connecting thread PG	metrički	tip	vanjski promjer (A) mm	unutarnji promjer (I) mm	debljina (S) mm	broj artikla čelik pocinčani	JP kom.
PG	metric	Type	External diameter (A) mm	Internal diameter (I) mm	Thickness (S) mm	Art. no. galvanized steel	PU pcs.
PG 7	M 12	D 307/8	11,0	8,0	1,0	8110026	1
PG 9	M 16 - M 20	D 309/10	13,5	10,0	1,0	8110050	1
PG 11	M 16 - M 20	D 311/10	17,0	10,0	0,8	8110085	1
PG 11	M 16 - M 20	D 311/12	17,0	12,0	1,0	8110093	1
PG 13,5	M 20 - M 25	D 313/10	18,5	10,0	0,8	8110107	1
PG 13,5	M 20 - M 25	D 313/14	18,5	14,0	1,0	8110115	1
PG 16	M 20 - M 25	D 316/12	20,5	12,0	0,8	8110123	na upit/on request
PG 16	M 20 - M 25	D 316/16	21,0	16,0	1,0	8110131	1
PG 21	M 25 - M 32	D 321/21	26,0	21,0	1,0	8110166	1
PG 29	M 32	D 329/30	35,0	30,0	1,0	8110174	1
PG 36	M 40	D 336/38	45,0	38,0	1,0	8110182	1
PG 42	M 50	D 342/43	52,0	43,0	1,0	8110190	1
PG 48	M 63	D 348/48	57,0	48,0	1,0	8110204	1

Brtveni prsten za spojne navoje
polietilen
PG-/metrički navoj

Packing Ring for connection thread
Polyethylene
PG-/metric thread

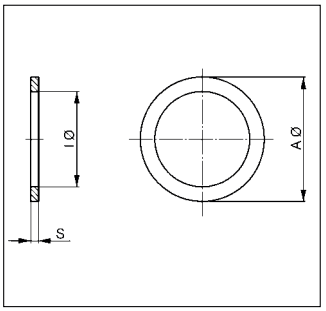

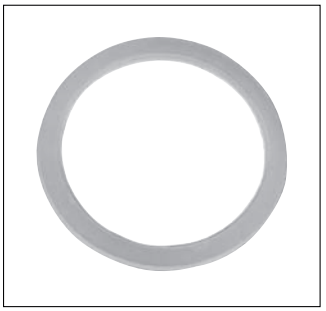

RoHS

Materijal:
polietilen PE-LD

Radna temperatura:
-40°C do 80°C

Boje/izvedbe:
- prirodna
- spojni navoj: PG/metrički

Svojstva:
- bez halogena
- kemijska otpornost

Upotreba:
- odgovara za kabelske uvodnice, kao i za pribor

Material:
Polyethylene PE-LD

Temperature range:
-40°C to 80°C

Colour(s)/Designs:
- nature
- Connecting thread: PG/metric

Characteristics:
- halogen-free
- chemical resistance

Applications:
- suitable for cable glands as well as Accessories

3.3

spojni navoj Connecting thread	tip Type	I-Ø mm I-Ø mm	A-Ø mm I-Ø mm	debljina (S) mm Thickness (S) mm	broj artikla PE-LD Art. no. PE-LD	JP kom. PU pcs.
PG / PG						
PG 7	307 K	12,1	16,5	1,5	8115010	100
PG 9	309 K	14,8	19,0	1,5	8115028	100
PG 11	311 K	18,1	22,5	2,0	8115036	100
PG 13,5	313 K	19,8	25,0	2,0	8115044	100
PG 16	316 K	22,1	27,0	2,0	8115052	100
PG 21	321 K	27,7	34,0	2,0	8115060	100
PG 29	329 K	36,4	44,0	2,0	8115079	100
PG 36	336 K	46,4	54,0	2,0	8115087	100
PG 42	342 K	53,3	62,0	3,0	8115095	100
PG 48	348 K	58,5	69,0	3,0	8115109	100
metrički / metric						
M 12 x 1,5	3 M 12-D	12,0	16,0	2,0	8115150	1
M 16 x 1,5	3 M 16-D	16,0	20,0	2,0	8115151	1
M 20 x 1,5	3 M 20-D	20,0	24,0	2,0	8115152	1
M 25 x 1,5	3 M 25-D	25,0	29,0	2,0	8115153	1
M 32 x 1,5	3 M 32-D	32,0	36,0	2,0	8115154	1
M 40 x 1,5	3 M 40-D	40,0	45,0	2,0	8115155	1
M 50 x 1,5	3 M 50-D	50,0	56,0	2,0	8115156	1
M 63 x 1,5	3 M 63-D	63,0	70,0	2,0	8115157	1

Brtva slijepa
polietilen, siva
poliamid, bijela
PG-/metrički navoj

Dummy Discs
Polyethylene, grey
Polyamide, white
PG-/metric thread

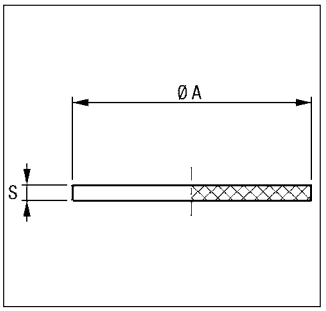

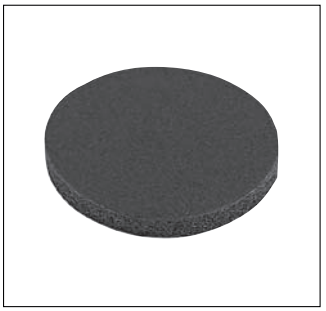

RoHS

Materijal:
- polietilen, siva
- poliamid, bijela

Radna temperatura:
-30°C do 100°C

Boje/izvedbe:
- siva, bijela
- spojni navoj: PG/metrički

Upotreba:
- kao zaštita od prašine ispod glave kabelske uvodnice

Material:
- Polyethylene, grey
- Polyamide, white

Temperature range:
-30°C do 100°C

Colour(s)/Designs:
- grey, white
- Connecting thread: PG/metric

Applications:
- As dust protection under the cap nut of the cable gland

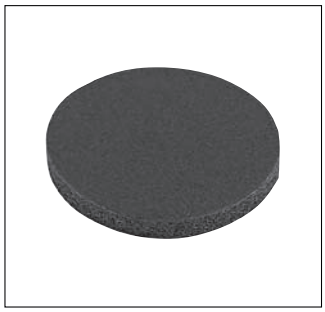

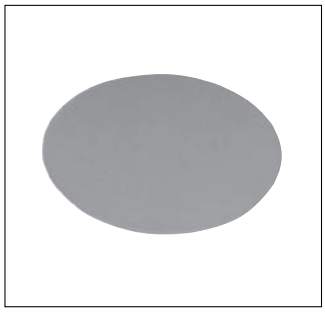

Boja Colour	spojni navoj Connecting thread	tip Type	vanjski promjer (A) mm External diameter (A) mm	debljina (S) mm Thickness (S) mm	broj artikla Art. no.	JP kom. PU pcs.
PG / PG						
siva / grey	PG 7	PR 7	11,0	3,0	7006207	1
siva / grey	PG 9	PR 9	13,0	3,0	7006209	1
siva / grey	PG 11	PR 11	16,5	3,0	7006211	1
siva / grey	PG 13,5	PR 13	18,5	3,0	7006213	1
siva / grey	PG 16	PR 16	20,5	3,0	7006216	1
siva / grey	PG 21	PR 21	27,0	3,0	7006255	1
siva / grey	PG 29	PR 29	35,0	3,0	7006229	1
siva / grey	PG 36	PR 36	45,0	3,0	7006236	1
siva / grey	PG 42	PR 42	52,0	3,0	7006242	1
siva / grey	PG 48	PR 48	57,0	3,0	7006248	1
metrički / metric						
siva / grey	M 12 x 1,5		11,0	3,0	7006207	1
siva / grey	M 16 x 1,5/9		13,8	3,0	7006251	1
siva / grey	M 16 x 1,5/11		17,0	3,0	7006252	1
siva / grey	M 20 x 1,5/13		19,0	3,0	7006253	1
siva / grey	M 20 x 1,5/16		20,9	3,0	7006254	1
siva / grey	M 25 x 1,5/21		26,3	3,0	7006255	1
siva / grey	M 32 x 1,5		34,8	3,0	7006256	1
siva / grey	M 40 x 1,5		43,8	3,0	7006257	1
siva / grey	M 50 x 1,5		50,3	3,0	7006258	1
siva / grey	M 63 x 1,5		59,3	3,0	7006259	1
PG / PG						
bijela / white	PG 7	BS 7	10,5		7006012	1
bijela / white	PG 9	BS 9	13,5		7006020	1
bijela / white	PG 11	BS 11	16,5		7006039	1
bijela / white	PG 13,5	BS 13	18,5		7006047	1
bijela / white	PG 16	BS 16	20,5		7006055	1
bijela / white	PG 21	BS 21	26,0		7006063	1
bijela / white	PG 29	BS 29	35,0		7006071	1
bijela / white	PG 36	BS 36	45,0		7006080	1
bijela / white	PG 42	BS 42	52,0		7006098	1
bijela / white	PG 48	BS 48	57,0		7006101	1

3.3

ATEX kabelske uvodnice
ATEX pribor

	stranica
ATEX kabelske uvodnice plastika PA	**102 - 112**
S-TEC Ex e / Ex i	102 - 104
WADI-TEC Ex e	105 - 112
ATEX kabelske uvodnice mesing niklani	**113 - 140**
S-TEC Ex e	113 - 114
WADI-TEC Ex e	115 - 127
WADI-TEC Ex e nehrđajući čelik	128 - 130
1F Ex d/e	131 - 133
3F Ex d/e	134 - 136
4F Ex d/e	137 - 139
Kabelska prirubnica za Ex d/e	140
ATEX pribor	**141 - 163**
Matice	
mesing niklani	142
Redukcije	
plastika PA Ex e	143
plastika PC Ex e	144
mesing niklani Ex e	145 - 146
mesing niklani Ex d/e	147
Proširenja	
plastika PA Ex e	148
plastika PC Ex e	149
mesing niklani Ex e	150 - 151
mesing niklani Ex d/e	152
Čepovi	
plastika PA Ex e	153
plastika PC Ex e	154
mesing niklani Ex e	155 - 156
Prijelazi	
mesing niklani Ex e	157 - 160
mesing niklani Ex d/e	161 - 162
Brtve plosnate	
neopren	163

ATEX Cable glands
ATEX Accessories

	page
ATEX Cable glands Plastic PA	**102 - 112**
S-TEC Ex e / Ex i	102 - 104
WADI-TEC Ex e	105 - 112
ATEX Cable glands nickel-plated brass	**113 - 140**
S-TEC Ex e	113 - 114
WADI-TEC Ex e	115 - 127
WADI-TEC Ex e Stainless steel	128 - 130
1F Ex d/e	131 - 133
3F Ex d/e	134 - 136
4F Ex d/e	137 - 139
Clamping Bracket for Ex d/e	140
ATEX Accessories	**141 - 163**
Lock nuts	
Nickel-plated brass	142
Reducers	
Plastic PA Ex e	143
Plastic PC Ex e	144
Nickel-plated brass Ex e	145 - 146
Nickel-plated brass Ex d/e	147
Enlargers	
Plastic PA Ex e	148
Plastic PC Ex e	149
Nickel-plated brass Ex e	150 - 151
Nickel-plated brass Ex d/e	152
Plugs	
Plastic PA Ex e	153
Plastic PC Ex e	154
Nickel-plated brass Ex e	155- 156
Adapter	
Nickel-plated brass Ex e	157 - 160
Nickel-plated brass Ex d/e	161 - 162
Flat sealings	
Neoprene	163

Kabelska uvodnica ATEX Ex e S-TEC

poliamid
metrički navoj

Cable gland ATEX Ex e S-TEC

Polyamide
metric thread

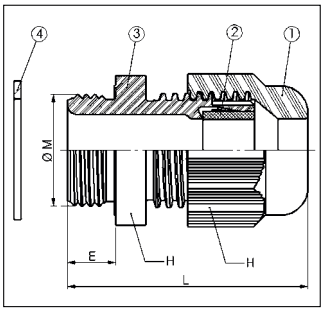

RoHS | Ex | IP 68 | UL | PG | EN 50262 | TECEx | INMETRO

Materijal:
- 1/3: tijelo kabelske uvodnice / glava: poliamid
- 2: brtva: neopren
- 4: brtva plosnata: neopren

Radna temperatura:
M12: -20°C do 80°C
M16-M63: -35°C do 95°C

Boje/izvedbe:
- crna, plava
- vanjski navoj: metrički
- kratki/dugi navoj

Svojstva:
certifikat: LCIE 07 ATEX 6082 X
tip zaštite: Ex e
testni standard: EN 60079-0, EN 60079-7, EN 61241-0, EN 61241-1
grupa uređaja: II
kategorija: 2 i 3
atmosfera: G / D
zona: 1, 2, 21, 22

Upotreba:
- za područja ugrožena eksplozijom
- izrada strojeva i aparata
- tehnologija mjernih i kontrolnih instrumenata
- instalacije u proizvodnim postrojenjima

Material:
- 1/3: Gland element/Cap nut: Polyamide
- 2: Sealing: Neoprene
- 4: Flat Sealing: Neoprene

Temperature range:
M12: -20°C to 80°C
M16-M63: -35°C to 95°C

Colour(s)/Designs:
- jet black, blue
- External thread: Metric
- short/long thread

Characteristics:
Certificate: LCIE 07 ATEX 6082 X
Type of protection: Ex e
Test standard: EN 60079-0, EN 60079-7, EN 61241-0, EN 61241-1
Device group: II
Category: 2 and 3
Atmosphere: G / D
Zone: 1, 2, 21, 22

Applications:
- for explosion endangered areas
- Machine- and apparatus construction
- Measuring and control engineering
- Plant installations

vanjski navoj External thread	za kabel promjera mm Clamping range mm	duljina navoja (E) mm Thread length (E) mm	ključ veličine (H) mm Across Flats (H) mm	ukupna duljina (L) mm Complete length (L) mm	broj artikla crna, Ex e RAL 9005 Art.-No. jet black, Ex e RAL 9005	referenca SIB Katalog S. 68 Reference catalogue SIB page 68	odgovarajuće matice Lock nut	JP kom. PU pcs.
metrički, kratki navoj / metric, short thread								
M 12 x 1.5	4.0 - 6.5	8,0	15,0	32,0	5507540	F8021200E	6004121	50
M 16 x 1.5/9	5.0 - 8.0	10,0	19,0	37,0	5507541	F8021650E	6004164	50
M 16 x 1.5/11	5.0 - 10.0	10,0	22,0	39,0	5507542	F8021600E	6004164	50
M 20 x 1.5/13	7.0 - 12.0	10,0	24,0	40,0	5507543	F8022050E	6004202	50
M 20 x 1.5/16	10.0 - 14.0	10,0	27,0	43,0	5507544	F8022000E	6004202	50
M 25 x 1.5/16	10.0 - 14.0	10,0	27,0	45,0	5507545	F8022550E	6004253	20
M 25 x 1.5/21	12.0 - 18.0	10,0	33,0	49,0	5507546	F8022500E	6004253	20
M 32 x 1.5	16.0 - 25.0	10,0	42,0	52,0	5507547	F8023200E	6004326	20
M 40 x 1.5	22.0 - 32.0	10,0	53,0	62,0	5507548	F8024000E	7211990	20
M 50 x 1.5	28.0 - 38.5	12,0	60,0	67,0	5507549	F8025000E	7211991	10
M 63 x 1.5	40.0 - 48.0	12,0	70,0	68,0	5507550	F8026300E	7211992	5
metrički, dugi navoj / metric, long thread								
M 12 x 1.5	4.0 - 6.5	15,0	15,0	39,0	5507640	F8031200E	6004121	50
M 16 x 1.5/9	5.0 - 8.0	15,0	19,0	42,0	5507641	F8031650E	6004164	50
M 16 x 1.5/11	5.0 - 10.0	15,0	22,0	44,0	5507642	F8031600E	6004164	50
M 20 x 1.5/13	7.0 - 12.0	15,0	24,0	45,0	5507643	F8032050E	6004202	50
M 20 x 1.5/16	10.0 - 14.0	15,0	27,0	48,0	5507644	F8032000E	6004202	50
M 25 x 1.5/16	10.0 - 14.0	15,0	27,0	50,0	5507645	F8032550E	6004253	20
M 25 x 1.5/21	12.0 - 18.0	15,0	33,0	53,0	5507646	F8032500E	6004253	20
M 32 x 1.5	16.0 - 25.0	15,0	42,0	57,0	5507647	F8033200E	6004326	20
M 40 x 1.5	22.0 - 32.0	16,0	53,0	68,0	5507648	F8034000E	7211990	20
M 50 x 1.5	28.0 - 38.5	16,0	60,0	71,0	5507649	F8035000E	7211991	10
M 63 x 1.5	40.0 - 48.0	16,0	70,0	72,0	5507650	F8036300E	7211992	5

Kabelverschraubung ATEX Ex e S-TEC

Polyamid
metrisches Gewinde

Cable gland ATEX Ex e S-TEC

Polyamide
metric thread

RoHS | IP 68 | EN 50262

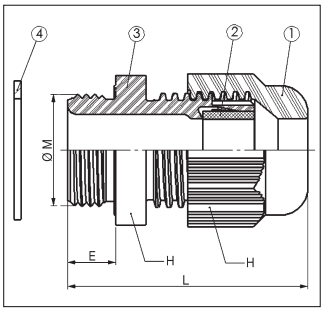

Materijal:
- 1/3: tijelo kabelske uvodnice / glava: poliamid
- 2: brtva: neopren
- 4: brtva plosnata: neopren

Radna temperatura:
M12: -20°C do 80°C
M16-M63: -35°C do 95°C

Boje/izvedbe:
- crna, plava
- vanjski navoj: metrički
- kratki/dugi navoj

Svojstva:
certifikat: LCIE 07 ATEX 6082 X
tip zaštite: Ex e
testni standard: EN 60079-0, EN 60079-7, EN 61241-0, EN 61241-1
grupa uređaja: II
kategorija: 2 i 3
atmosfera: G / D
zona: 1, 2, 21, 22

Upotreba:
- za područja ugrožena eksplozijom
- izrada strojeva i aparata
- tehnologija mjernih i kontrolnih instrumenata
- instalacije u proizvodnim postrojenjima

Material:
- 1/3: Gland element/Cap nut: Polyamide
- 2: Sealing: Neoprene
- 4: Flat Sealing: Neoprene

Temperature range:
M12: -20°C to 80°C
M16-M63: -35°C to 95°C

Colour(s)/Designs:
- jet black, blue
- External thread: Metric
- short/long thread

Characteristics:
Certificate: LCIE 07 ATEX 6082 X
Type of protection: Ex e
Test standard: EN 60079-0, EN 60079-7, EN 61241-0, EN 61241-1
Device group: II
Category: 2 and 3
Atmosphere: G / D
Zone: 1, 2, 21, 22

Applications:
- for explosion endangered areas
- Machine- and apparatus construction
- Measuring and control engineering
- Plant installations

vanjski navoj External thread	za kabel promjera mm Clamping range mm	duljina navoja (E) mm Thread length (E) mm	ključ veličine (H) mm Across Flats (H) mm	ukupna duljina (L) mm Complete length (L) mm	broj artikla crna, Ex e RAL 9005 Art.-No. jet black, Ex e RAL 9005	referenca SIB Katalog S. 68 Reference catalogue SIB page 68	odgovarajuće matice Lock nut	JP kom. PU pcs.
metrički, kratki navoj / metric, short thread								
M 12 x 1.5	4.0 - 6.5	8,0	15,0	32,0	5507560	F7421200E	6004121	50
M 16 x 1.5/9	5.0 - 8.0	10,0	19,0	37,0	5507561	F7421650E	6004164	50
M 16 x 1.5/11	5.0 - 10.0	10,0	22,0	39,0	5507562	F7421600E	6004164	50
M 20 x 1.5/13	7.0 - 12.0	10,0	24,0	40,0	5507563	F7422050E	6004202	50
M 20 x 1.5/16	10.0 - 14.0	10,0	27,0	43,0	5507564	F7422000E	6004202	50
M 25 x 1.5/16	10.0 - 14.0	10,0	27,0	45,0	5507565	F7422550E	6004253	20
M 25 x 1.5/21	12.0 - 18.0	10,0	33,0	49,0	5507566	F7422500E	6004253	20
M 32 x 1.5	16.0 - 25.0	10,0	42,0	52,0	5507567	F7423200E	6004326	20
M 40 x 1.5	22.0 - 32.0	10,0	53,0	62,0	5507568	F7424000E	7211990	20
M 50 x 1.5	28.0 - 38.5	12,0	60,0	67,0	5507569	F7425000E	7211991	10
M 63 x 1.5	40.0 - 48.0	12,0	70,0	68,0	5507570	F7426300E	7211992	5
metrički, dugi navoj / metric, long thread								
M 12 x 1.5	4.0 - 6.5	15,0	15,0	39,0	5507660	F7431200E	6004121	50
M 16 x 1.5/9	5.0 - 8.0	15,0	19,0	42,0	5507661	F7431650E	6004164	50
M 16 x 1.5/11	5.0 - 10.0	15,0	22,0	44,0	5507662	F7431600E	6004164	50
M 20 x 1.5/13	7.0 - 12.0	15,0	24,0	45,0	5507663	F7432050E	6004202	50
M 20 x 1.5/16	10.0 - 14.0	15,0	27,0	48,0	5507664	F7432000E	6004202	50
M 25 x 1.5/16	10.0 - 14.0	15,0	27,0	50,0	5507665	F7432550E	6004253	20
M 25 x 1.5/21	12.0 - 18.0	15,0	33,0	53,0	5507666	F7432500E	6004253	20
M 32 x 1.5	16.0 - 25.0	15,0	42,0	57,0	5507667	F7433200E	6004326	20
M 40 x 1.5	22.0 - 32.0	16,0	53,0	68,0	5507668	F7434000E	7211990	20
M 50 x 1.5	28.0 - 38.5	16,0	60,0	71,0	5507669	F7435000E	7211991	10
M 63 x 1.5	40.0 - 48.0	16,0	70,0	72,0	5507670	F7436300E	7211992	5

Kabelska uvodnica ATEX Ex e S-TEC

poliamid
NPT-navoj

Cable gland ATEX Ex e S-TEC

Polyamide
NPT-thread

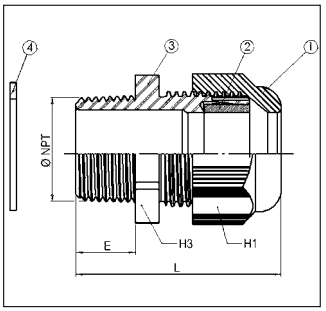

RoHS | Ex | IP 68 | UL | PG | IECEx | INMETRO

Materijal:
- 1/3: tijelo kabelske uvodnice / glava: poliamid
- 2: brtva: neopren
- 4: brtva plosnata: neopren

Radna temperatura:
-35°C do 95°C

Boje/izvedbe:
- crna, plava
- vanjski navoj: NPT

Svojstva:

certifikat:	LCIE 07 ATEX 6082 X
tip zaštite:	Ex e
testni standard:	EN 60079-0, EN 60079-7, EN 61241-0, EN 61241-1
grupa uređaja:	II
kategorija:	2 i 3
atmosfera:	G / D
zona:	1, 2, 21, 22

Upotreba:
- za područja ugrožena eksplozijom
- izrada strojeva i aparata
- tehnologija mjernih i kontrolnih instrumenata
- instalacije u proizvodnim postrojenjima

Material:
- 1/3: Gland element/Cap nut: Polyamide
- 2: Sealing: Neoprene
- 4: Flat Sealing: Neoprene

Temperature range:
-35°C to 95°C

Colour(s)/Designs:
- jet black, blue
- External thread: NPT

Characteristics:

Certificate:	LCIE 07 ATEX 6082 X
Type of protection:	Ex e
Test standard:	EN 60079-0, EN 60079-7, EN 61241-0, EN 61241-1
Device group:	II
Category:	2 and 3
Atmosphere:	G / D
Zone:	1, 2, 21, 22

Applications:
- for explosion endangered areas
- Machine- and apparatus construction
- Measuring and control engineering
- Plant installations

vanjski navoj External thread	za kabel promjera mm Clamping range mm	duljina navoja (E) mm Thread length (E) mm	ključ veličine (H) mm Across Flats (H) mm	ukupna duljina (L) mm Complete length (L) mm	broj artikla crna, Ex e RAL 9005 Art.-No. jet black, Ex e RAL 9005	referenca SIB Katalog S. 68 Reference catalogue SIB page 68	JP kom. PU pcs.
NPT 5/8"	3,0 - 8,0	11,0	19,0	38,0	5507740	F8040800E	50
NPT 1/2"	7,0 - 12,0	14,0	24,0	44,0	5507741	F8041200E	50
NPT 3/4"	12,0 - 18,0	15,0	33,0	54,0	5507742	F8042000E	10
NPT 1"	16,0 - 25,0	18,0	42,0	60,0	5507743	F8042800E	10

3.4

vanjski navoj External thread	za kabel promjera mm Clamping range mm	duljina navoja (E) mm Thread length (E) mm	ključ veličine (H) mm Across Flats (H) mm	ukupna duljina (L) mm Complete length (L) mm	broj artikla plava, Ex e RAL 9005 Art.-No. blue, Ex e RAL 9005	referenca SIB Katalog S. 68 Reference catalogue SIB page 68	JP kom. PU pcs.
NPT 5/8"	3,0 - 8,0	11,0	19,0	38,0	5507760	F7440800E	50
NPT 1/2"	7,0 - 12,0	14,0	24,0	44,0	5507761	F7441200E	50
NPT 3/4"	12,0 - 18,0	15,0	33,0	54,0	5507762	F7442000E	10
NPT 1"	16,0 - 25,0	18,0	42,0	60,0	5507763	F7442800E	10

Kabelska uvodnica ATEX Ex e WADI-TEC

poliamid 25 % GF
ECA-stezni prsten
metrički/PG-navoj

Cable gland ATEX Ex e WADI-TEC

Polyamide 25 % GF
ECA-Clamping-Ring
metric/PG-thread

RoHS | Ex | IP 68 | PG | EN 50262 | INMETRO

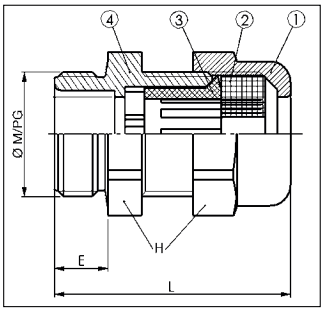

Materijal:
- 1/4: tijelo kabelske uvodnice / glava: poliamid PA 6, 25 % ojačan staklenim vlaknima
- 2: brtva: neopren
- 3: ECA-stezni prsten: polikarbonat

Radna temperatura:
-20°C do 55°C

Boje/izvedbe:
- crna
- vanjski navoj: metrički/PG
- kratki/dugi navoj

Svojstva:
certifikat: LCIE 99 ATEX 6030 X
tip zaštite: Ex e
testni standard: EN 60079-0, EN 60079-7, EN 61241-0, EN 61241-1
grupa uređaja: II
kategorija: 2 i 3
atmosfera: G / D
zona: 1, 2
zona: 21, 22 sa ravnom brtvom

Upotreba:
- za područja ugrožena eksplozijom
- izrada strojeva i aparata
- tehnologija mjernih i kontrolnih instrumenata
- instalacije u proizvodnim postrojenjima

Material:
- 1/4: Gland element/Cap nut: Polyamide PA 6, 25 % glassfiber reinforced
- 2: Sealing: Neoprene
- 3: ECA-Clamping-Ring: Polycarbonate

Temperature range:
-20°C to 55°C

Colour(s)/Designs:
- black
- External thread: Metric/PC
- short/long thread

Characteristics:
Certificate: LCIE 99 ATEX 6030 X
Type of protection: Ex e
Test standard: EN 60079-0, EN 60079-7, EN 61241-0, EN 61241-1
Device group: II
Category: 2 and 3
Atmosphere: G / D
Zone: 1, 2
Zone: 21, 22 with flat sealing

Applications:
- for explosion endangered areas
- Machine- and apparatus construction
- Measuring and control engineering
- Plant installations

vanjski navoj External thread	za kabel promjera mm Clamping range mm	za kabel promjera sa zaštitom od izvlačenja mm Clamping range mm	duljina navoja (E) mm Thread length (E) mm	ključ veličine (H) mm Across Flats (H) mm	ukupna duljina (L) mm Complete length (L) mm	broj artikla crna Art.-No. black	referenca SIB Katalog S. 68 Reference catalogue SIB page 68	odgovarajuće matice Lock nut	JP kom. PU pcs.
metrički, kratki navoj / metric, short thread									
M 16 x 1,5	5,5 - 8,5	3,5 - 5,5	8,0	19,0	32,0	5507250			50
M 20 x 1,5/13	8,0 - 12,5	5,0 - 8,0	9,0	24,0	36,0	5507251			50
M 20 x 1,5/16	10,0 - 14,0	6,5 - 10,0	9,0	27,0	39,0	5507252			50
M 25 x 1,5	12,5 - 18,5	8,0 - 12,5	11,0	33,0	44,0	5507253			20
M 32 x 1,5	18,0 - 25,0	10,0 - 18,0	12,0	42,0	55,0	5507254			20
metrički, dugi navoj / metric, long thread									
M 16 x 1,5	5,5 - 8,5	3,5 - 5,5	15,0	19,0	39,0	5507360			50
M 20 x 1,5	8,0 - 12,5	5,0 - 8,0	15,0	24,0	42,0	5507361			50
M 20 x 1,5/13	10,0 - 14,0	6,5 - 10,0	15,0	27,0	45,0	5507362			50
M 25 x 1,5/16	12,5 - 18,5	8,0 - 12,5	15,0	33,0	49,0	5507363			20
M 32 x 1,5	18,0 - 25,0	10,0 - 18,0	15,0	42,0	58,0	5507364			20
M 40 x 1,5	24,0 - 34,0	-	15,0	55,0	62,0	5507365			20
M 50 x 1,5	34,0 - 42,0	-	15,0	65,0	65,0	5507366			10
M 63 X 1,5	40,0 - 48,0	-	15,0	70,0	65,0	5507367			5
PG, kratki navoj / PG, short thread									
PG 9	5,5 - 8,5	3,5 - 5,5	8,0	19,0	32,0	5507050			50
PG 11	6,5 - 10,5	4,0 - 6,5	8,0	22,0	35,0	5507051			50
PG 13,5	8,0 - 12,5	5,0 - 8,0	9,0	24,0	36,0	5507052			50
PG 16	10,0 - 14,0	6,5 - 10,0	10,0	27,0	40,0	5507053			50
PG 21	12,5 - 18,5	8,0 - 12,5	11,0	33,0	44,0	5507054			20
PG 29	18,0 - 25,0	10,0 - 18,0	12,0	42,0	55,0	5507055			20
PG, dugi navoj / PG, long thread									
PG 9	3,5 - 5,5	3,5 - 5,5	15,0	19,0	39,0	5507150			50
PG 11	6,5 - 10,5	4,0 - 6,5	15,0	22,0	42,0	5507151			50
PG 13,5	8,0 - 12,5	5,0 - 8,0	15,0	24,0	42,0	5507152			50
PG 16	10,0 - 14,0	6,5 - 10,0	15,0	27,0	45,0	5507153			50
PG 21	12,5 - 18,5	8,0 - 12,5	15,0	33,0	49,0	5507154			20
PG 29	18,0 - 25,0	10,0 - 18,0	15,0	42,0	58,0	5507155			20
PG 36	24,0 - 34,0	-	18,0	55,0	65,0	5507156			10
PG 42	34,0 - 42,0	-	18,0	65,0	68,0	5507157			5
PG 48	40,0 - 48,0	-	18,0	70,0	68,0	5507158			5

Kabelska uvodnica ATEX Ex e WADI-TEC

poliamid 25 % GF
za plosnati kabel
metrički navoj, kratki

Cable gland ATEX Ex e WADI-TEC

Polyamide 25 % GF
flat cable sealing
metric thread, short

RoHS | Ex | IP 68 | IP 66 | PG | EN 50262

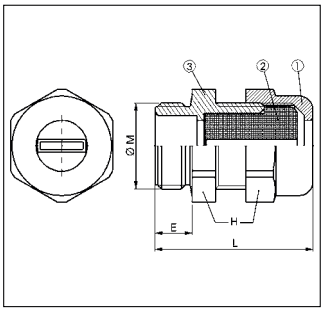

Materijal:
- 1/3: tijelo kabelske uvodnice / glava: poliamid PA 6, 25 % ojačan staklenim vlaknima
- 2: brtva: elastomer

Radna temperatura:
-20°C do 55°C

Boje/izvedbe:
- crna
- vanjski navoj: metrički
- kratki navoj
- brtva za plosnati kabel, zaobljeni

Svojstva:

certifikat:	LCIE 99 ATEX 6030 X
tip zaštite:	Ex e
testni standard:	EN 60079-0, EN 60079-7, EN 61241-0, EN 61241-1
grupa uređaja:	II
kategorija:	2 i 3
atmosfera:	G / D
zona:	1, 2
zona:	21, 22 sa ravnom brtvom

Upotreba:
- za područja ugrožena eksplozijom
- izrada strojeva i aparata
- tehnologija mjernih i kontrolnih instrumenata
- instalacije u proizvodnim postrojenjima

Material:
- 1/3: Gland element/Cap nut: Polyamide PA 6, 25 % glassfiber reinforced
- 2: Sealing: Elastomere

Temperature range:
-20°C to 55°C

Colour(s)/Designs:
- black
- External thread: Metric
- short thread
- sealing for flat cable, round

Characteristics:

Certificate:	LCIE 99 ATEX 6030 X
Type of protection:	Ex e
Test standard:	EN 60079-0, EN 60079-7, EN 61241-0, EN 61241-1
Device group:	II
Category:	2 and 3
Atmosphere:	G / D
Zone:	1, 2
	21, 22 with flat sealing

Applications:
- for explosion endangered areas
- Machines and apparatus construction
- Measuring and control engineering
- Plant installations

vanjski navoj External thread	duljina navoja (E) mm Thread length (E) mm	ključ veličine (H) mm Across Flats (H) mm	ukupna duljina (L) mm Complete length (L) mm	plosnati kabel, zaobljeni / Flat cable, round: za kabel promjera mm Clamping range mm	broj artikla crna Art.-No. black	JP kom. PU pcs.
M 16 x 1,5	8,0	19,0	30,0	3,5 - 5,5	5321801	na upit
M 20 x 1,5	9,0	24,0	32,0	3,0 - 12,0	5321802	on request
M 20 x 1,5	9,0	24,0	32,0	5,0 - 11,0	5321803	na upit
M 20 x 1,5	9,0	27,0	36,0	5,0 - 12,0	5321804	on request
M 20 x 1,5	9,0	27,0	36,0	7,5 - 14,0	5321805	na upit
M 25 x 1,5	11,0	33,0	42,0	5,0 - 16,0	5321806	on request
M 25 x 1,5	11,0	33,0	42,0	5,0 - 17,0	5321807	na upit
M 25 x 1,5	11,0	33,0	42,0	7,0 - 18,0	5321808	on request
M 25 x 1,5	11,0	33,0	42,0	9,0 - 15,0	5321809	na upit
M 32 x 1,5	12,0	42,0	50,0	8,0 - 25,0	5321810	on request
M 32 x 1,5	12,0	42,0	50,0	10,0 - 25,0	5321811	na upit
M 40 x 1,5	15,0	55,0	53,0	6,0 - 29,0	5321812	on request
M 40 x 1,5	15,0	55,0	53,0	6,0 - 30,0	5321813	na upit
M 40 x 1,5	15,0	55,0	53,0	6,0 - 36,0	5321814	on request
M 40 x 1,5	15,0	55,0	53,0	8,0 - 36,0	5321815	na upit
M 40 x 1,5	15,0	55,0	53,0	11,0 - 34,0	5321816	on request
M 40 x 1,5	15,0	55,0	53,0	12,0 - 35,0	5321817	na upit
M 40 x 1,5	15,0	55,0	53,0	13,0 - 28,0	5321818	on request
M 50 x 1,5	15,0	65,0	57,0	10,0 - 38,0	5321819	na upit
M 50 x 1,5	15,0	65,0	57,0	13,0 - 35,0	5321820	on request
M 50 x 1,5	15,0	65,0	57,0	14,0 - 37,0	5321821	na upit
M 63 x 1,5	15,0	70,0	58,0	6,5 - 47,0	5321822	on request
M 63 x 1,5	15,0	70,0	58,0	9,0 - 43,0	5321823	na upit
M 63 x 1,5	15,0	70,0	58,0	14,5 - 39,0	5321824	on request
M 63 x 1,5	15,0	70,0	58,0	15,0 - 45,0	5321825	na upit

Kabelska uvodnica ATEX Ex e WADI-TEC

poliamid 25 % GF
za plosnati kabel
metrički navoj, dugi

Cable gland ATEX Ex e WADI-TEC

Polyamide 25 % GF
flat cable sealing
metric thread, long

RoHS | Ex | IP 68 | IP 66 | PG | EN 50262

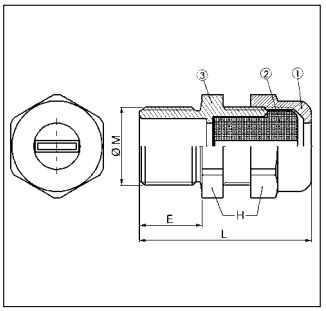

Materijal:
- 1/3: tijelo kabelske uvodnice / glava: poliamid PA 6, 25 % ojačan staklenim vlaknima
- 2: brtva: elastomer

Radna temperatura:
-20°C do 55°C

Boje/izvedbe:
- crna
- vanjski navoj: metrički
- dugi navoj
- brtva za plosnati kabel, ovalni, zaobljeni ili pravokutni

Svojstva:

certifikat:	LCIE 99 ATEX 6030 X
tip zaštite:	Ex e
testni standard:	EN 60079-0, EN 60079-7, EN 61241-0, EN 61241-1
grupa uređaja:	II
kategorija:	2 i 3
atmosfera:	G / D
zona:	1, 2
zona:	21, 22 sa ravnom brtvom

Upotreba:
- za područja ugrožena eksplozijom
- izrada strojeva i aparata
- tehnologija mjernih i kontrolnih instrumenata
- instalacije u proizvodnim postrojenjima

Material:
- 1/3: Gland element/Cap nut: Polyamide PA 6, 25 % glassfiber reinforced
- 2: Sealing: Elastomere

Temperature range:
-20°C to 55°C

Colour(s)/Designs:
- black
- External thread: Metric
- short thread
- sealing for flat cable, oval, round or angular

Characteristics:

Certificate:	LCIE 99 ATEX 6030 X
Type of protection:	Ex e
Test standard:	EN 60079-0, EN 60079-7, EN 61241-0, EN 61241-1
Device group:	II
Category:	2 and 3
Atmosphere:	G / D
Zone:	1, 2
	21, 22 with flat sealing

Applications:
- for explosion endangered areas
- Machines and apparatus construction
- Measuring and control engineering
- Plant installations

				plosnati kabel, zaobljeni Flat cable, round		plosnati kabel, pravokutni Flat cable, angular		plosnati kabel, ovalni Flat cable, oval		
vanjski navoj External thread	ključ veličine (H) mm Across Flats (H) mm	duljina navoja (E) mm Thread length (E) mm	ukupna duljina (L) mm Complete length (L) mm	za kabel promjera mm Clamping range mm	broj artikla crna Art.-No. black	za kabel promjera mm Clamping range mm	broj artikla crna Art.-No. black	za kabel promjera mm Clamping range mm	broj artikla crna kom. Art.-No. black	JP PU pcs.
M 16 x 1,5	19,0	15,0	36,0	3,5 x 5,5	5321865					na upit
M 20 x 1,5	24,0	15,0	38,0	3,0 x 12,0	5321866			5,0 x 8,0	5321880	on request
M 20 x 1,5	24,0	15,0	38,0	5,0 x 11,0	5321867					na upit
M 20 x 1,5	24,0	15,0	38,0	5,0 x 12,0	5321868			5,0 x 12,0	5321881	on request
M 20 x 1,5	27,0	15,0	42,0					5,5 x 8,5	5321882	na upit
M 20 x 1,5	27,0	15,0	42,0					7,0 x 14,0	5321883	on request
M 20 x 1,5	27,0	15,0	42,0	7,5 x 14,0	5321869	8,0 x 12,0	5321890			na upit
M 25 x 1,5	33,0	15,0	46,0			4,0 x 15,0	5321891			on request
M 25 x 1,5	33,0	15,0	46,0					5,0 x 15,0	5321884	na upit
M 25 x 1,5	33,0	15,0	46,0	5,0 x 16,0	5321870			5,0 x 16,0	5321885	on request
M 25 x 1,5	33,0	15,0	46,0	5,0 x 17,0	5321871			6,0 x 15,0	5321886	na upit
M 25 x 1,5	33,0	15,0	46,0	7,0 x 18,0	5321872			7,0 x 16,5	5321887	on request
M 25 x 1,5	33,0	15,0	46,0	9,0 x 15,0	5321873					na upit
M 32 x 1,5	42,0	15,0	53,0					7,0 x 20,0	5321888	on request
M 32 x 1,5	42,0	15,0	53,0	8,0 x 25,0	5321874					na upit
M 32 x 1,5	42,0	15,0	53,0	10,0 x 25,0	5321875					on request

Kabelska uvodnica ATEX Ex e WADI-TEC

poliamid 25 % GF
za plosnati kabel
PG-navoj, kratki

Cable gland ATEX Ex e WADI-TEC

Polyamide 25 % GF
flat cable sealing
PG-thread, short

RoHS | Ex | IP 68 | IP 66 | PG

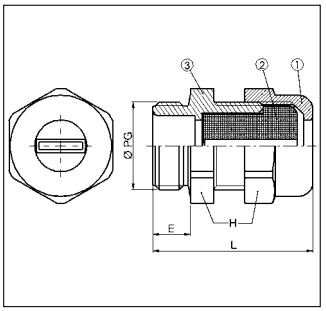

Materijal:
- 1/3: tijelo kabelske uvodnice / glava: poliamid PA 6, 25 % ojačan staklenim vlaknima
- 2: brtva: elastomer

Radna temperatura:
-20°C do 55°C

Boje/izvedbe:
- crna
- vanjski navoj: PG
- kratki navoj
- brtva za plosnati kabel, zaobljeni

Svojstva:
certifikat: LCIE 99 ATEX 6030 X
tip zaštite: Ex e
testni standard: EN 60079-0, EN 60079-7, EN 61241-0, EN 61241-1
grupa uređaja: II
kategorija: 2 i 3
atmosfera: G / D
zona: 1, 2
zona: 21, 22 sa ravnom brtvom

Upotreba:
- za područja ugrožena eksplozijom
- izrada strojeva i aparata
- tehnologija mjernih i kontrolnih instrumenata
- instalacije u proizvodnim postrojenjima

Material:
- 1/3: Gland element/Cap nut: Polyamide PA 6, 25 % glassfiber reinforced
- 2: Sealing: Elastomere

Temperature range:
-20°C to 55°C

Colour(s)/Designs:
- black
- External thread: PG
- short thread
- sealing for flat cable, round

Characteristics:
Certificate: LCIE 99 ATEX 6030 X
Type of protection: Ex e
Test standard: EN 60079-0, EN 60079-7, EN 61241-0, EN 61241-1
Device group: II
Category: 2 and 3
Atmosphere: G / D
Zone: 1, 2
Zone: 21, 22 with flat sealing

Applications:
- for explosion endangered areas
- Machine- and apparatus construction
- Measuring and control engineering
- Plant installations

3.4

vanjski navoj External thread	duljina navoja (E) mm Thread length (E) mm	ključ veličine (H) mm Across Flats (H) mm	ukupna duljina (L) mm Complete length (L) mm	plosnati kabel, zaobljeni / Flat cable, round: za kabel promjera mm Clamping range mm	broj artikla crna Art.-No. black	JP kom. PU pcs.
PG 9	8,0	19,0	30,0	3,5 x 5,5	5321701	na upit
PG 11	8,0	22,0	34,0	2,8 x 10,5	5321702	on request
PG 11	8,0	22,0	34,0	3,5 x 9,0	5321703	na upit
PG 11	8,0	22,0	34,0	4,0 x 6,0	5321704	on request
PG 13	9,0	24,0	31,0	3,0 x 12,0	5321705	na upit
PG 13	9,0	24,0	31,0	5,0 x 11,0	5321706	on request
PG 16	10,0	27,0	36,0	5,0 x 12,0	5321707	na upit
PG 16	10,0	33,0	38,0	5,0 x 16,0	5321708	on request
PG 16	10,0	27,0	36,0	7,5 x 14,0	5321709	na upit
PG 21	11,0	33,0	42,0	5,0 x 17,0	5321710	on request
PG 21	11,0	33,0	42,0	7,0 x 18,0	5321711	na upit
PG 21	11,0	33,0	42,0	9,0 x 15,0	5321712	on request
PG 29	12,0	42,0	48,0	8,0 x 25,0	5321713	na upit
PG 29	12,0	42,0	48,0	10,0 x 25,0	5321714	on request
PG 29	12,0	55,0	50,0	6,0 x 29,0	5321715	na upit
PG 29	12,0	55,0	50,0	13,0 x 28,0	5321716	on request
PG 36	18,0	55,0	56,0	6,0 x 30,0	5321717	na upit
PG 36	18,0	55,0	56,0	6,0 x 36,0	5321718	on request
PG 36	18,0	55,0	56,0	8,0 x 36,0	5321719	na upit
PG 36	18,0	55,0	56,0	11,0 x 34,0	5321720	on request
PG 36	18,0	55,0	56,0	12,0 x 35,0	5321721	na upit
PG 42	18,0	65,0	60,0	10,0 x 38,0	5321722	on request
PG 42	18,0	65,0	60,0	13,0 x 35,0	5321723	na upit
PG 42	18,0	65,0	60,0	14,0 x 37,0	5321724	on request
PG 48	18,0	70,0	60,0	6,5 x 47,0	5321725	na upit
PG 48	18,0	70,0	60,0	9,0 x 43,0	5321726	on request
PG 48	18,0	70,0	60,0	14,5 x 39,0	5321727	na upit

Kabelska uvodnica ATEX Ex e WADI-TEC Duplo

Polyamid 25 % GF
brtva sa više otvora
PG-navoj, kratki

Cable gland ATEX Ex e WADI-TEC Duplo

Polyamide 25 % GF
multi-holed sealing
PG-thread, short

RoHS | Ex | IP 68 | IP 66 | PG

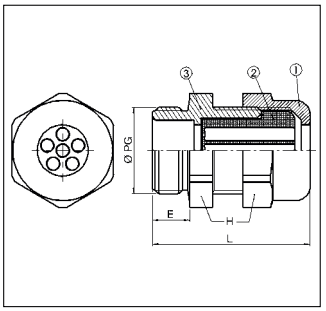

Materijal:
- 1/3: tijelo kabelske uvodnice / glava: poliamid PA 6, 25 % ojačan staklenim vlaknima
- 2: brtva: elastomer

Radna temperatura:
-20°C do 55°C

Boje/izvedbe:
- crna
- vanjski navoj: PG
- kratki navoj
- brtva sa više otvora
- zabrtvljeni otvori
- nije potrebno čepiti otvor brtve

Svojstva:

certifikat:	LCIE 99 ATEX 6030 X
tip zaštite:	Ex e
testni standard:	EN 60079-0, EN 60079-7, EN 61241-0, EN 61241-1
grupa uređaja:	II
kategorija:	2 i 3
atmosfera:	G / D
zona:	1, 2,
zona:	21, 22 sa ravnom brtvom

Upotreba:
- za područja ugrožena eksplozijom
- izrada strojeva i aparata
- tehnologija mjernih i kontrolnih instrumenata
- instalacije u proizvodnim postrojenjima

Material:
- 1/3: Gland element/Cap nut: Polyamide PA 6, 25 % glassfiber reinforced
- 2: Sealing: Elestomere

Temperature range:
-20°C to 55°C

Colour(s)/Designs:
- black
- External thread: PG
- short thread
- multi-holed sealing
- Blind hole sealing
- no blind pin required

Characteristics:

Certificate:	LCIE 99 ATEX 6030 X
Type of protection:	Ex e
Test standard:	EN 60079-0, EN 60079-7, EN 61241-0, EN 61241-1
Device group:	II
Category:	2 and 3
Atmosphere:	G / D
Zone:	1, 2,
Zone:	21, 22 with flat sealing

Applications:
- for explosion endangered areas
- Machines and apparatus construction
- Measuring and control engineering
- Plant installations

vanjski navoj External thread	količina Quantity	promjer otvora mm hole diameter mm	duljina navoja (E) mm Thread length (E) mm	ključ veličine (H) mm Across Flats (H) mm	ukupna duljina (L) mm Complete length (L) mm	broj artikla crna Art.-No. black	JP kom. PU pcs.
PG 7	1 x	4,0	8,0	15,0	31,0	5318601	50
PG 7	1 x	5,0	8,0	15,0	31,0	5318602	50
PG 9	1 x	5,0	8,0	19,0	30,0	5318603	50
PG 9	2 x	1,0	8,0	19,0	30,0	5318604	50
PG 9	2 x	3,0	8,0	19,0	30,0	5318605	50
PG 9	2 x	3,5	8,0	19,0	30,0	5318606	50
PG 9	2 x	4,0	8,0	19,0	30,0	5318607	50
PG 9	3 x	3,0	8,0	19,0	30,0	5318608	50
PG 9	4 x	3,0	8,0	22,0	30,0	5318609	50
PG 9	4 x	4,0	8,0	22,0	30,0	5318610	50
PG 11	2 x	2,3	8,0	22,0	34,0	5318611	50
PG 11	2 x	3,0	8,0	22,0	34,0	5318612	50
PG 11	2 x	3,5	8,0	22,0	34,0	5318613	50
PG 11	2 x	4,0	8,0	22,0	34,0	5318614	50
PG 11	2 x	5,0	8,0	22,0	34,0	5318615	50
PG 11	3 x	3,0	8,0	22,0	34,0	5318616	50
PG 11	3 x	3,5	8,0	22,0	34,0	5318617	50
PG 11	3 x	4,0	8,0	22,0	34,0	5318618	50
PG 11	4 x	1,5	8,0	22,0	34,0	5318619	50
PG 11	4 x	3,5	8,0	22,0	34,0	5318620	50
PG 11	6 x	2,0	8,0	22,0	34,0	5318621	50
PG 11	6 x	2,5	8,0	22,0	34,0	5318622	50
PG 11	3 x	5,3	8,0	24,0	34,0	5318623	50
PG 11	2 x	6,0	8,0	27,0	34,0	5318624	50
PG 11	3 x	5,0	8,0	27,0	34,0	5318625	50
PG 13	2 x	3,0	9,0	24,0	31,0	5318626	50
PG 13	2 x	5,0	9,0	24,0	31,0	5318627	50
PG 13	2 x	6,0	9,0	24,0	31,0	5318628	50
PG 13	3 x	2,0	9,0	24,0	31,0	5318629	50
PG 13	3 x	3,0	9,0	24,0	31,0	5318630	50
PG 13	3 x	4,0	9,0	24,0	31,0	5318631	50
PG 13	3 x	5,3	9,0	24,0	31,0	5318632	50
PG 13	4 x	3,0	9,0	24,0	31,0	5318633	50
PG 13	4 x	4,0	9,0	24,0	31,0	5318634	50
PG 13	6 x	3,5	9,0	24,0	31,0	5318635	50
PG 13	10 x	2,0	9,0	24,0	31,0	5318636	50
PG 13	3 x	6,0	9,0	27,0	36,0	5318637	50
PG 13	4 x	5,3	9,0	27,0	36,0	5318639	50

vanjski navoj External thread	količina Quantity	promjer otvora mm hole diameter mm	duljina navoja (E) mm Thread length (E) mm	ključ veličine (H) mm Across Flats (H) mm	ukupna duljina (L) mm Complete length (L) mm	broj artikla crna Art.-No. black	JP kom. PU pcs.
PG 16	2 x	4,0	10,0	27,0	36,0	5318640	50
PG 16	2 x	5,0	10,0	27,0	36,0	5318641	50
PG 16	2 x	6,0	10,0	27,0	36,0	5318642	50
PG 16	2 x	7,0	10,0	27,0	36,0	5318643	50
PG 16	3 x	3,0	10,0	27,0	36,0	5318644	50
PG 16	3 x	4,0	10,0	27,0	36,0	5318645	50
PG 16	3 x	5,0	10,0	27,0	36,0	5318646	50
PG 16	3 x	5,6	10,0	27,0	36,0	5318647	50
PG 16	3 x	6,0	10,0	27,0	36,0	5318648	50
PG 16	4 x	4,0	10,0	27,0	36,0	5318649	50
PG 16	5 x	4,0	10,0	27,0	36,0	5318650	50
PG 16	5 x	5,0	10,0	27,0	36,0	5318651	50
PG 16	6 x	4,0	10,0	27,0	36,0	5318652	50
PG 16	2 x	8,0	10,0	33,0	38,0	5318653	20
PG 16	2 x	9,0	10,0	33,0	38,0	5318654	20
PG 16	3 x	7,0	10,0	33,0	38,0	5318655	20
PG 16	3 x	8,0	10,0	33,0	38,0	5318656	20
PG 16	4 x	5,0	10,0	33,0	38,0	5318657	20
PG 16	4 x	6,0	10,0	33,0	38,0	5318658	20
PG 16	7 x	4,0	10,0	33,0	38,0	5318659	20
PG 21	2 x	4,5	11,0	33,0	42,0	5318660	20
PG 21	2 x	8,0	11,0	33,0	42,0	5318661	20
PG 21	3 x	7,0	11,0	33,0	42,0	5318662	20
PG 21	3 x	8,0	11,0	33,0	42,0	5318663	20
PG 21	4 x	5,0	11,0	33,0	42,0	5318664	20
PG 21	4 x	6,0	11,0	33,0	42,0	5318665	20
PG 21	5 x	5,0	11,0	33,0	42,0	5318666	20
PG 21	5 x	6,0	11,0	33,0	42,0	5318667	20
PG 21	5 x	6,5	11,0	33,0	42,0	5318668	20
PG 21	6 x	4,0	11,0	33,0	42,0	5318669	20
PG 21	6 x	5,0	11,0	33,0	42,0	5318670	20
PG 21	8 x	4,0	11,0	33,0	42,0	5318671	20
PG 21	8 x	5,0	11,0	33,0	42,0	5318672	20
PG 21	2 x	8,7	11,0	42,0	48,0	5318673	20
PG 21	2 x	9,0	11,0	42,0	48,0	5318674	20
PG 21	2 x	11,0	11,0	42,0	48,0	5318675	20
PG 21	3 x	9,0	11,0	42,0	48,0	5318676	20
PG 21	4 x	7,5	11,0	42,0	48,0	5318677	20
PG 21	4 x	8,0	11,0	42,0	48,0	5318678	20
PG 21	6 x	6,0	11,0	42,0	48,0	5318679	20
PG 21	6 x	6,5	11,0	42,0	48,0	5318680	20
PG 21	6 x	7,0	11,0	42,0	48,0	5318681	20
PG 21	7 x	6,0	11,0	42,0	48,0	5318682	20
PG 21	11 x	5,0	11,0	42,0	48,0	5318683	20
PG 21	21 x	2,0	11,0	42,0	48,0	5318684	20
PG 21	28 x	3,0	11,0	42,0	48,0	5318685	20
PG 29	2 x	9,0	12,0	42,0	48,0	5318686	20
PG 29	2 x	11,0	12,0	42,0	48,0	5318687	20
PG 29	2 x	12,0	12,0	42,0	48,0	5318688	20
PG 29	3 x	9,0	12,0	42,0	48,0	5318689	20
PG 29	3 x	11,0	12,0	42,0	48,0	5318690	20
PG 29	4 x	8,0	12,0	42,0	48,0	5318691	20
PG 29	4 x	9,0	12,0	42,0	48,0	5318692	20
PG 29	4 x	10,0	12,0	42,0	48,0	5318693	20
PG 29	6 x	6,0	12,0	42,0	48,0	5318694	20
PG 29	6 x	6,5	12,0	42,0	48,0	5318695	20
PG 29	6 x	7,0	12,0	42,0	48,0	5318696	20
PG 29	7 x	6,0	12,0	42,0	48,0	5318697	20
PG 29	7 x	7,0	12,0	42,0	48,0	5318698	20
PG 29	8 x	5,0	12,0	42,0	48,0	5318699	20
PG 29	8 x	6,0	12,0	42,0	48,0	5318700	20
PG 29	10 x	6,0	12,0	42,0	48,0	5318701	20
PG 29	11 x	5,0	12,0	42,0	48,0	5318702	20
PG 29	28 x	3,0	12,0	42,0	48,0	5318703	20

Kabelska uvodnica ATEX Ex e WADI-TEC Duplo

Polyamid 25 % GF
brtva sa više otvora
metrički navoj, kratki

Cable gland ATEX Ex e WADI-TEC Duplo

Polyamide 25 % GF
multi-holed sealing
metric thread, short

RoHS | Ex | IP 68 | IP 66 | PG | EN 50262

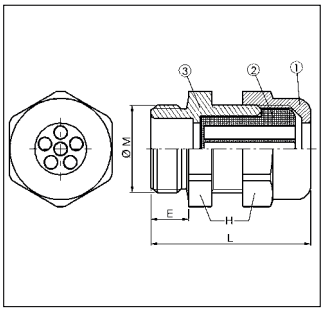

Materijal:
- 1/3: tijelo kabelske uvodnice / glava: poliamid PA 6, 25 % ojačan staklenim vlaknima
- 2: brtva: elastomer

Radna temperatura:
-20°C do 55°C

Boje/izvedbe:
- crna
- vanjski navoj: metrički
- kratki navoj
- brtva sa više otvora
- zabrtvljeni otvori
- nije potrebno čepiti otvor brtve

Svojstva:

certifikat:	LCIE 99 ATEX 6030 X
tip zaštite:	Ex e
testni standard:	EN 60079-0, EN 60079-7, EN 61241-0, EN 61241-1
grupa uređaja:	II
kategorija:	2 i 3
atmosfera:	G / D
zona:	1, 2,
zona:	21, 22 sa ravnom brtvom

Upotreba:
- za područja ugrožena eksplozijom
- izrada strojeva i aparata
- tehnologija mjernih i kontrolnih instrumenata
- instalacije u proizvodnim postrojenjima

Material:
- 1/3: Gland element/Cap nut: Polyamide PA 6, 25 % glassfiber reinforced
- 2: Sealing: Elestomere

Temperature range:
-20°C to 55°C

Colour(s)/Designs:
- black
- External thread: Metric
- short thread
- multi-holed sealing
- Blind hole sealing
- no blind pin required

Characteristics:

Certificate:	LCIE 99 ATEX 6030 X
Type of protection:	Ex e
Test standard:	EN 60079-0, EN 60079-7, EN 61241-0, EN 61241-1
Device group:	II
Category:	2 and 3
Atmosphere:	G / D
Zone:	1, 2,
Zone:	21, 22 with flat sealing

Applications:
- for explosion endangered areas
- Machines and apparatus construction
- Measuring and control engineering
- Plant installations

vanjski navoj External thread	količina Quantity	promjer otvora mm hole diameter mm	duljina navoja (E) mm Thread length (E) mm	ključ veličine (H) mm Across Flats (H) mm	ukupna duljina (L) mm Complete length (L) mm	broj artikla crna Art.-No. black	JP kom. PU pcs.
M 16 x 1,5	2 x	1,0	8,0	19,0	30,0	5318501	50
M 16 x 1,5	2 x	3,0	8,0	19,0	30,0	5318502	50
M 16 x 1,5	2 x	3,5	8,0	19,0	30,0	5318503	50
M 16 x 1,5	2 x	4,0	8,0	19,0	30,0	5318504	50
M 16 x 1,5	3 x	3,0	8,0	19,0	30,0	5318505	50
M 20 x 1,5	2 x	3,0	9,0	24,0	32,0	5318506	50
M 20 x 1,5	2 x	4,0	9,0	27,0	36,0	5318507	50
M 20 x 1,5	3 x	2,0	9,0	24,0	32,0	5318508	50
M 20 x 1,5	2 x	5,0	9,0	27,0	36,0	5318509	50
M 20 x 1,5	4 x	3,0	9,0	24,0	32,0	5318510	50
M 20 x 1,5	2 x	6,0	9,0	27,0	36,0	5318511	50
M 20 x 1,5	6 x	3,5	9,0	24,0	32,0	5318512	50
M 20 x 1,5	2 x	7,0	9,0	27,0	36,0	5318513	50
M 20 x 1,5	10 x	2,0	9,0	24,0	32,0	5318514	50
M 20 x 1,5	3 x	3,0	9,0	27,0	36,0	5318515	50
M 20 x 1,5	3 x	4,0	9,0	27,0	36,0	5318516	50
M 20 x 1,5	3 x	5,0	9,0	27,0	36,0	5318517	50
M 20 x 1,5	3 x	5,6	9,0	27,0	36,0	5318518	50
M 20 x 1,5	3 x	6,0	9,0	27,0	36,0	5318519	50
M 20 x 1,5	4 x	4,0	9,0	27,0	36,0	5318520	50
M 20 x 1,5	5 x	4,0	9,0	27,0	36,0	5318521	50
M 20 x 1,5	5 x	5,0	9,0	27,0	36,0	5318522	50
M 20 x 1,5	6 x	4,0	9,0	27,0	36,0	5318523	50
M 25 x 1,5	2 x	4,5	11,0	33,0	42,0	5318524	20
M 25 x 1,5	2 x	8,0	11,0	33,0	42,0	5318525	20
M 25 x 1,5	3 x	7,0	11,0	33,0	42,0	5318526	20
M 25 x 1,5	3 x	8,0	11,0	33,0	42,0	5318527	20
M 25 x 1,5	4 x	5,0	11,0	33,0	42,0	5318528	20
M 25 x 1,5	4 x	6,0	11,0	33,0	42,0	5318529	20
M 25 x 1,5	5 x	5,0	11,0	33,0	42,0	5318530	20
M 25 x 1,5	5 x	6,0	11,0	33,0	42,0	5318531	20
M 25 x 1,5	5 x	6,5	11,0	33,0	42,0	5318532	20
M 25 x 1,5	6 x	4,0	11,0	33,0	42,0	5318533	20
M 25 x 1,5	6 x	5,0	11,0	33,0	42,0	5318534	20
M 25 x 1,5	8 x	4,0	11,0	33,0	42,0	5318535	20
M 25 x 1,5	8 x	5,0	11,0	33,0	42,0	5318536	20
M 25 x 1,5	21 x	2,0	11,0	33,0	42,0	5318537	20
M 32 x 1,5	2 x	9,0	12,0	42,0	50,0	5318538	20

vanjski navoj External thread	količina Quantity	promjer otvora mm hole diameter mm	duljina navoja (E) mm Thread length (E) mm	ključ veličine (H) mm Across Flats (H) mm	ukupna duljina (L) mm Complete length (L) mm	broj artikla crna Art.-No. black	JP kom. PU pcs.
M 32 x 1,5	2 x	11,0	12,0	42,0	50,0	5318539	20
M 32 x 1,5	2 x	12,0	12,0	42,0	50,0	5318540	20
M 32 x 1,5	3 x	9,0	12,0	42,0	50,0	5318541	20
M 32 x 1,5	3 x	11,0	12,0	42,0	50,0	5318542	20
M 32 x 1,5	4 x	8,0	12,0	42,0	50,0	5318543	20
M 32 x 1,5	4 x	9,0	12,0	42,0	50,0	5318544	20
M 32 x 1,5	4 x	10,0	12,0	42,0	50,0	5318545	20
M 32 x 1,5	6 x	6,0	12,0	42,0	50,0	5318546	20
M 32 x 1,5	6 x	6,5	12,0	42,0	50,0	5318547	20
M 32 x 1,5	6 x	7,0	12,0	42,0	50,0	5318548	20
M 32 x 1,5	7 x	6,0	12,0	42,0	50,0	5318549	20
M 32 x 1,5	7 x	7,0	12,0	42,0	50,0	5318550	20
M 32 x 1,5	8 x	5,0	12,0	42,0	50,0	5318551	20
M 32 x 1,5	8 x	6,0	12,0	42,0	50,0	5318552	20
M 32 x 1,5	10 x	6,0	12,0	42,0	50,0	5318553	20
M 32 x 1,5	11 x	5,0	12,0	42,0	50,0	5318554	20
M 32 x 1,5	28 x	3,0	12,0	42,0	50,0	5318555	20

Kabelska uvodnica ATEX Ex e S-TEC

mesing niklani
metrički navoj

Cable gland ATEX Ex e S-TEC

nickel-plated brass
metric thread

RoHS | Ex | IP 68 | IP 66 | PG | EN 50262

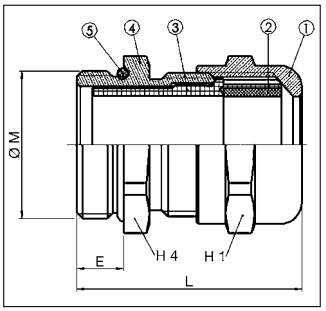

Materijal:
- 1/4: tijelo kabelske uvodnice / glava: mesing niklani
- 2: brtveni prsten: neopren
- 3: stezni prsten: poliamid 6
- 5: O-brtva: nitril

Radna temperatura:
-40°C do 100°C

Boje/izvedbe:
- vanjski navoj: metrički
- kratki/dugi navoj
- raspoloživo i sa redukcijskom brtvom

Svojstva:
certifikat: LCIE 03 ATEX 6400 X
tip zaštite: Ex e
testni standard: EN 60079-0, EN 60079-7, EN 61241-0, EN 61241-1
grupa uređaja: II
kategorija: 2 i 3
atmosfera: G / D
zona: 1, 2 , 21, 22

Upotreba:
- za područja ugrožena eksplozijom
- izrada strojeva i aparata
- tehnologija mjernih i kontrolnih instrumenata
- instalacije u proizvodnim postrojenjima

Material:
- 1/4: Gland element/Cap nut: nickel-plated brass
- 2: Sealing ring: Neoprene
- 3: Clamping shell: Polyamide 6
- 5: O-ring: Nitrile

Temperature range:
-40°C to 100°C

Colour(s)/Designs:
- External thread: metric
- short/long thread
- also available with reduction sealing insert

Characteristics:
Certificate: LCIE 03 ATEX 6400 X
Type of protection: Ex e
Test standard: EN 60079-0, EN 60079-7, EN 61241-0, EN 61241-1
Device group: II
Category: 2 and 3
Atmosphere: G / D
Zone: 1, 2, 21, 22

Applications:
- for explosion endangered areas
- Machine- and apparatus construction
- Measuring and control engineering
- Plant installations

vanjski navoj External thread	za kabel promjera mm Clamping range mm	duljina navoja (E) mm Thread length (E) mm	ključ veličine (H1) mm Across Flats (H1) mm	ključ veličine (H4) mm Across Flats (H4) mm	ukupna duljina (L) mm Complete length (L) mm	broj artikla niklano Art.-No. nickel-plated	JP kom. PU pcs.
kratki navoj / short thread							
M 12 x 1,5	4,5 - 6,5	5,0	14,0	14,0	25,0	4108012	50
M 16 x 1,5	5,0 - 9,5	5,0	17,0	17,0	28,0	4108016	50
M 20 x 1,5	8,0 - 13,0	6,0	22,0	22,0	32,0	4108020	50
M 25 x 1,5	9,0 - 16,0	7,0	27,0	27,0	35,0	4108025	20
M 32 x 1,5	12,0 - 21,0	8,0	34,0	34,0	38,0	4108032	20
M 40 x 1,5	16,0 - 27,0	8,0	42,0	42,0	41,0	4108040	20
M 50 x 1,5	23,0 - 35,0	9,0	55,0	55,0	46,0	4108050	10
M 63 x 1,5	36,0 - 48,0	10,0	65,0	65,0	54,0	4108063	5
dugi navoj / long thread							
M 12 x 1,5	4,5 - 6,5	15,0	14,0	14,0	35,0	4108112	50
M 16 x 1,5	5,0 - 9,5	15,0	17,0	17,0	38,0	4108116	50
M 20 x 1,5	8,0 - 13,0	15,0	22,0	22,0	41,0	4108120	50
M 25 x 1,5	9,0 - 16,0	15,0	27,0	27,0	43,0	4108125	20
M 32 x 1,5	12,0 - 21,0	15,0	34,0	34,0	45,0	4108132	20
M 40 x 1,5	16,0 - 27,0	15,0	42,0	42,0	48,0	4108140	20
M 50 x 1,5	23,0 - 35,0	15,0	55,0	55,0	52,0	4108150	10
M 63 x 1,5	36,0 - 48,0	15,0	65,0	65,0	59,0	4108163	5

Kabelska uvodnica ATEX Ex e S-TEC

mesing niklani
PG-/NPT-navoj

Cable gland ATEX Ex e S-TEC

nickel-plated brass
PG-/NPT-thread

RoHS | Ex | IP 68 | IP 66 | PG

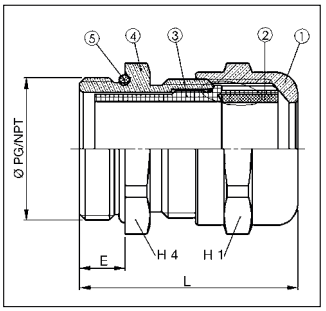

Materijal:
- 1/4: tijelo kabelske uvodnice / glava: mesing niklani
- 2: brtveni prsten: neopren
- 3: stezni prsten: poliamid 6
- 5: O-brtva: nitril

Radna temperatura:
-40°C do 100°C

Boje/izvedbe:
- vanjski navoj: PG/NPT
- kratki/dugi navoj

Svojstva:
certifikat: LCIE 03 ATEX 6400 X
tip zaštite: Ex e
testni standard: EN 60079-0, EN 60079-7, EN 61241-0, EN 61241-1
grupa uređaja: II
kategorija: 2 i 3
atmosfera: G / D
zona: 1, 2 , 21, 22

Upotreba:
- za područja ugrožena eksplozijom
- izrada strojeva i aparata
- tehnologija mjernih i kontrolnih instrumenata
- instalacije u proizvodnim postrojenjima

Material:
- 1/4: Gland element/Cap nut: nickel-plated brass
- 2: Sealing ring: Neoprene
- 3: Clamping shell: Polyamide 6
- 5: O-ring: Nitrile

Temperature range:
-40°C to 100°C

Colour(s)/Designs:
- External thread: PG/NPT
- short/long thread

Characteristics:
Certificate: LCIE 03 ATEX 6400 X
Type of protection: Ex e
Test standard: EN 60079-0, EN 60079-7, EN 61241-0, EN 61241-1
Device group: II
Category: 2 and 3
Atmosphere: G / D
Zone: 1, 2, 21, 22

Applications:
- for explosion endangered areas
- Machine- and apparatus construction
- Measuring and control engineering
- Plant installations

vanjski navoj External thread	za kabel promjera mm Clamping range mm	duljina navoja (E) mm Thread length (E) mm	ključ veličine (H1) mm Across Flats (H1) mm	ključ veličine (H4) mm Across Flats (H4) mm	ukupna duljina (L) mm Complete length (L) mm	broj artikla niklano Art.-No. nickel-plated	JP kom. PU pcs.
kratki navoj / short thread							
PG 7	4,5 - 6,5	5,0	14,0	14,0	25,0	4108207	50
PG 9	5,0 - 9,5	6,0	17,0	17,0	29,0	4108209	50
PG 11	7,0 - 11,5	6,0	20,0	20,0	30,0	4108211	50
PG 13,5	8,0 - 13,0	6,5	22,0	22,0	32,5	4108213	50
PG 16	9,0 - 15,0	6,5	24,0	24,0	34,0	4108216	25
PG 21	12,0 - 19,0	7,0	30,0	30,0	35,0	4108221	20
PG 29	17,0 - 26,0	8,0	40,0	40,0	38,0	4108229	15
PG 36	23,0 - 34,5	9,0	50,0	50,0	42,0	4108236	10
PG 42	28,0 - 40,0	10,0	58,0	58,0	47,0	4108242	10
PG 48	36,0 - 48,0	10,0	65,0	65,0	54,0	4108248	10
dugi navoj / long thread							
PG 7	4,5 - 6,5	15,0	14,0	14,0	35,0	4108307	50
PG 9	5,0 - 9,5	15,0	17,0	17,0	38,0	4108309	50
PG 11	7,0 - 11,5	15,0	20,0	20,0	39,0	4108311	50
PG 13,5	8,0 - 13,0	15,0	22,0	22,0	41,0	4108313	50
PG 16	9,0 - 15,0	15,0	24,0	24,0	42,5	4108316	25
PG 21	12,0 - 19,0	15,0	30,0	30,0	43,0	4108321	20
PG 29	17,0 - 26,0	15,0	40,0	40,0	45,0	4108329	15
PG 36	23,0 - 34,5	15,0	50,0	50,0	48,0	4108336	10
PG 42	28,0 - 40,0	15,0	58,0	58,0	52,0	4108342	10
PG 48	36,0 - 48,0	15,0	65,0	65,0	59,0	4108348	10
NPT navoj / NPT thread							
NPT 3/8"	5,0 - 9,5	15,0	18,0	17,0	38,0	4108400	1
NPT 1/2"	8,0 - 13,0	20,0	23,0	22,0	46,0	4108401	1
NPT 3/4"	9,0 - 16,0	20,0	28,0	27,0	48,0	4108402	1
NPT 1"	12,0 - 21,0	25,0	36,0	34,0	55,0	4108403	1

Kabelska uvodnica ATEX Ex e WADI-TEC

mesing niklani
ECA-stezni prsten
metrički navoj

Cable gland ATEX Ex e WADI-TEC

nickel-plated brass
ECA-Clamping-Ring
metric thread

RoHS | Ex | IP 68 | IP 66 | PG | EN 50262

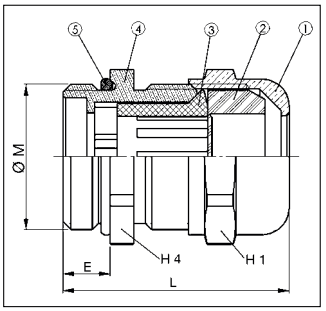

Materijal:
- 1/4: tijelo kabelske uvodnice / glava: mesing niklani
- 2: brtveni prsten: elastomer
- 3: ECA-stezni prsten: polikarbonat
- 5: O-brtva: nitril

Radna temperatura:
-20°C do 80°C

Boje/izvedbe:
- vanjski navoj: metrički
- kratki/dugi navoj

Svojstva:

certifikat:	LCIE 99 ATEX 6030 X
tip zaštite:	Ex e
testni standard:	EN 60079-0, EN 60079-7, EN 61241-0, EN 61241-1
grupa uređaja:	II
kategorija:	2 i 3
atmosfera:	G / D
zona:	1, 2 , 21, 22

Upotreba:
- za područja ugrožena eksplozijom
- izrada strojeva i aparata
- tehnologija mjernih i kontrolnih instrumenata
- instalacije u proizvodnim postrojenjima

Material:
- 1/4: Gland element/Cap nut: nickel-plated brass
- 2: Sealing: Elastomere
- 3: ECA-Clamping-Ring: Polycarbonate
- 5: O-ring: Nitrile

Temperature range:
-20°C to 80°C

Colour(s)/Designs:
- External thread: metric
- short/long thread

Characteristics:

Certificate:	LCIE 99 ATEX 6030 X
Type of protection:	Ex e
Test standard:	EN 60079-0, EN 60079-7, EN 61241-0, EN 61241-1
Device group:	II
Category:	2 and 3
Atmosphere:	G / D
Zone:	1, 2, 21, 22

Applications:
- for explosion endangered areas
- Machine- and apparatus construction
- Measuring and control engineering
- Plant installations

vanjski navoj External thread	za kabel promjera mm Clamping range mm	duljina navoja (E) mm Thread length (E) mm	ključ veličine (H1) mm Across Flats (H1) mm	ključ veličine (H4) mm Across Flats (H4) mm	ukupna duljina (L) mm Complete length (L) mm	broj artikla niklano Art.-No. nickel-plated	JP kom. PU pcs.
kratki navoj / short thread							
M 12 x 1,5	3,0 - 6,0	7,0	14,0	14,0	27,0	4107012	50
M 16 x 1,5/7	3,0 - 6,0	7,0	14,0	17,0	27,0	4107016	50
M 16 x 1,5/9	5,0 - 8,0	7,0	17,0	17,0	27,0	4107017	50
M 20 x 1,5/11	6,0 - 10,0	7,0	20,0	22,0	28,0	4107020	50
M 20 x 1,5/13	8,0 - 12,0	7,0	22,0	22,0	29,0	4107021	25
M 25 x 1,5/16	9,5 - 14,0	8,0	24,0	26,0	31,0	4107025	25
M 25 x 1,5/21	11,5 - 18,0	8,0	30,0	30,0	37,0	4107026	25
M 32 x 1,5/21	11,5 - 18,0	8,5	30,0	33,0	38,0	4107032	25
M 32 x 1,5/29	15,0 - 24,0	8,5	40,0	40,0	45,0	4107033	10
M 40 x 1,5	15,0 - 24,0	8,5	40,0	42,0	45,0	4107040	10
M 50 x 1,5	23,0 - 30,0	9,5	50,0	55,0	51,0	4107050	10
M 63 x 1,5	26,0 - 35,0	10,5	58,0	70,0	58,0	4107063	5
dugi navoj / long thread							
M 12 x 1,5	3,0 - 6,0	13,0	14,0	14,0	33,0	4107112	50
M 16 x 1,5/7	3,0 - 6,0	13,0	14,0	17,0	33,0	4107116	50
M 16 x 1,5/9	5,0 - 8,0	13,0	17,0	17,0	33,0	4107117	50
M 20 x 1,5/11	6,0 - 10,0	13,0	20,0	22,0	34,0	4107120	50
M 20 x 1,5/13	8,0 - 12,0	13,0	22,0	22,0	35,0	4107121	25
M 25 x 1,5/16	9,5 - 14,0	14,0	24,0	26,0	37,0	4107125	25
M 25 x 1,5/21	11,5 - 18,0	14,0	30,0	30,0	43,0	4107126	25
M 32 x 1,5/21	11,5 - 18,0	14,5	30,0	33,0	44,0	4107132	25
M 32 x 1,5/29	15,0 - 24,0	14,5	40,0	40,0	51,0	4107133	10
M 40 x 1,5	15,0 - 24,0	14,5	40,0	42,0	51,0	4107140	10
M 50 x 1,5	23,0 - 30,0	15,5	50,0	55,0	57,0	4107150	10
M 63 x 1,5	26,0 - 35,0	16,5	58,0	70,0	64,0	4107163	5

Kabelska uvodnica ATEX Ex e WADI-TEC

mesing niklani
ECA-stezni prsten
metrički navoj

Cable gland ATEX Ex e WADI-TEC

nickel-plated brass
ECA-Clamping-Ring
metric thread

RoHS | Ex | IP 68 | IP 66 | PG | EN 50262

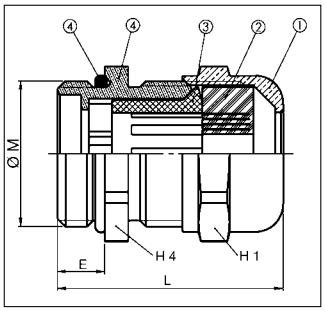

Materijal:
- 1/4: tijelo kabelske uvodnice / glava: mesing niklani
- 2: brtva: neopren
- 3: ECA-stezni prsten: polikarbonat
- 5: O-brtva: nitril

Radna temperatura:
-20°C do 80°C

Boje/izvedbe:
- vanjski navoj: metrički
- kratki/dugi navoj
- sa višeslojnom brtvom

Svojstva:
certifikat: LCIE 99 ATEX 6030 X
tip zaštite: Ex e
testni standard: EN 60079-0, EN 60079-7, EN 61241-0, EN 61241-1
grupa uređaja: II
kategorija: 2 i 3
atmosfera: G / D
zona: 1, 2 , 21, 22

Upotreba:
- za područja ugrožena eksplozijom
- izrada strojeva i aparata
- tehnologija mjernih i kontrolnih instrumenata
- instalacije u proizvodnim postrojenjima

Material:
- 1/4: Gland element/Cap nut: nickel-plated brass
- 2: Sealing: Neoprene
- 3: ECA-Clamping-Ring: Polycarbonate
- 5: O-ring: Nitrile

Temperature range:
-20°C to 80°C

Colour(s)/Designs:
- External thread: metric
- short/long thread
- with punchable sealing ring

Characteristics:
Certificate: LCIE 99 ATEX 6030 X
Type of protection: Ex e
Test standard: EN 60079-0, EN 60079-7, EN 61241-0, EN 61241-1
Device group: II
Category: 2 and 3
Atmosphere: G / D
Zone: 1, 2, 21, 22

Applications:
- for explosion endangered areas
- Machine- and apparatus construction
- Measuring and control engineering
- Plant installations

3.4

vanjski navoj External thread	za kabel promjera mm Clamping range mm	duljina navoja (E) mm Thread length (E) mm	ključ veličine (H1) mm Across Flats (H1) mm	ključ veličine (H4) mm Across Flats (H4) mm	ukupna duljina (L) mm Complete length (L) mm	broj artikla niklano Art.-No. nickel-plated	JP kom. PU pcs.
kratki navoj, sa višeslojnom brtvom / short thread, with punchable sealing ring							
M 16 x 1,5/9	3,0 - 5,5 - 8,5	7,0	17,0	17,0	27,0	4107216	50
M 20 x 1,5/11	4,0 - 6,5 - 10,5	7,0	20,0	22,0	28,0	4107220	50
M 20 x 1,5/13	5,0 - 8,0 - 12,5	7,0	22,0	22,0	29,0	4107221	25
M 25 x 1,5/16	6,5 - 10,0 - 14,5	8,0	24,0	26,0	31,0	4107225	25
M 25 x 1,5/21	8,0 - 12,0 - 18,5	8,0	30,0	30,0	37,0	4107226	25
M 32 x 1,5/21	8,0 - 12,0 - 18,5	8,5	30,0	33,0	38,0	4107232	25
M 32 x 1,5/29	10,0 - 16,0 - 24,5	8,5	40,0	40,0	45,0	4107233	10
M 40 x 1,5	10,0 - 16,0 - 24,5	8,5	40,0	42,0	45,0	4107240	10
dugi navoj, sa višeslojnom brtvom / long thread, with punchable sealing ring							
M 16 x 1,5/9	3,0 - 5,5 - 8,5	13,0	17,0	17,0	33,0	4107316	50
M 20 x 1,5/11	4,0 - 6,5 - 10,5	13,0	20,0	22,0	34,0	4107320	50
M 20 x 1,5/13	5,0 - 8,0 - 12,5	13,0	22,0	22,0	35,0	4107321	25
M 25 x 1,5/16	6,5 - 10,0 - 14,5	14,0	24,0	26,0	37,0	4107325	25
M 25 x 1,5/21	8,0 - 12,0 - 18,5	14,0	30,0	30,0	43,0	4107326	25
M 32 x 1,5/21	8,0 - 12,0 - 18,5	14,5	30,0	33,0	44,0	4107332	25
M 32 x 1,5/29	10,0 - 16,0 - 24,5	14,5	40,0	40,0	51,0	4107333	10
M 40 x 1,5	10,0 - 16,0 - 24,5	14,5	40,0	42,0	51,0	4107340	10

Kabelska uvodnica ATEX Ex e WADI-TEC

mesing niklani
ECA-stezni prsten
PG navoj

Cable gland ATEX Ex e WADI-TEC

nickel-plated brass
ECA-Clamping-Ring
PG-thread

RoHS | Ex | IP 68 | IP 66 | PG

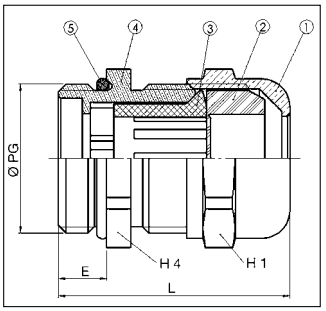

Materijal:
- 1/4: tijelo kabelske uvodnice / glava: mesing niklani
- 2: brtva: elastomer
- 3: ECA-stezni prsten: polikarbonat
- 5: O-brtva: nitril

Radna temperatura:
-20°C do 80°C

Boje/izvedbe:
- vanjski navoj: PG
- kratki/dugi navoj

Svojstva:
certifikat: LCIE 99 ATEX 6030 X
tip zaštite: Ex e
testni standard: EN 60079-0, EN 60079-7, EN 61241-0, EN 61241-1
grupa uređaja: II
kategorija: 2 i 3
atmosfera: G / D
zona: 1, 2 , 21, 22

Upotreba:
- za područja ugrožena eksplozijom
- izrada strojeva i aparata
- tehnologija mjernih i kontrolnih instrumenata
- instalacije u proizvodnim postrojenjima

Material:
- 1/4: Gland element/Cap nut: nickel-plated brass
- 2: Sealing: Elastomere
- 3: ECA-Clamping-Ring: Polycarbonate
- 5: O-ring: Nitrile

Temperature range:
-20°C to 80°C

Colour(s)/Designs:
- External thread: PG
- short/long thread

Characteristics:
Certificate: LCIE 99 ATEX 6030 X
Type of protection: Ex e
Test standard: EN 60079-0, EN 60079-7, EN 61241-0, EN 61241-1
Device group: II
Category: 2 and 3
Atmosphere: G / D
Zone: 1, 2, 21, 22

Applications:
- for explosion endangered areas
- Machine- and apparatus construction
- Measuring and control engineering
- Plant installations

vanjski navoj External thread	za kabel promjera mm Clamping range mm	duljina navoja (E) mm Thread length (E) mm	ključ veličine (H1) mm Across Flats (H1) mm	ključ veličine (H4) mm Across Flats (H4) mm	ukupna duljina (L) mm Complete length (L) mm	broj artikla niklano Art.-No. nickel-plated	JP kom. PU pcs.
kratki navoj / short thread							
PG 7	3,0 - 6,0	5,0	14,0	14,0	24,0	4107407	50
PG 9	5,0 - 8,0	6,0	17,0	17,0	25,0	4107409	50
PG 11	6,0 - 10,0	6,0	20,0	20,0	26,0	4107411	50
PG 13	8,0 - 12,0	6,5	22,0	22,0	28,0	4107413	50
PG 16	9,5 - 14,0	6,5	24,0	24,0	30,0	4107416	25
PG 21	11,5 - 18,0	7,0	30,0	30,0	35,0	4107421	25
PG 29	15,0 - 24,0	8,0	40,0	40,0	43,0	4107429	10
PG 36	23,0 - 30,0	9,0	50,0	50,0	50,0	4107436	10
PG 42	26,0 - 35,0	10,0	58,0	58,0	57,0	4107442	5
PG 48	35,0 - 40,0	10,0	64,0	64,0	59,0	4107448	5
dugi navoj / long thread							
PG 7	3,0 - 6,0	15,0	14,0	14,0	34,0	4107507	50
PG 9	5,0 - 8,0	15,0	17,0	17,0	34,0	4107509	50
PG 11	6,0 - 10,0	15,0	20,0	20,0	35,0	4107511	50
PG 13	8,0 - 12,0	15,0	22,0	22,0	36,5	4107513	50
PG 16	9,5 - 14,0	15,0	24,0	24,0	38,5	4107516	25
PG 21	11,5 - 18,0	15,0	30,0	30,0	43,0	4107521	25
PG 29	15,0 - 24,0	15,0	40,0	40,0	50,0	4107529	10
PG 36	23,0 - 30,0	18,0	50,0	50,0	59,0	4107536	10
PG 42	26,0 - 35,0	18,0	58,0	58,0	65,0	4107542	5
PG 48	35,0 - 40,0	18,0	64,0	64,0	67,0	4107548	5

Kabelska uvodnica ATEX Ex e WADI-TEC

mesing niklani
ECA-stezni prsten
PG navoj

Cable gland ATEX Ex e WADI-TEC

nickel-plated brass
ECA-Clamping-Ring
PG-thread

RoHS | IP 68 | IP 66

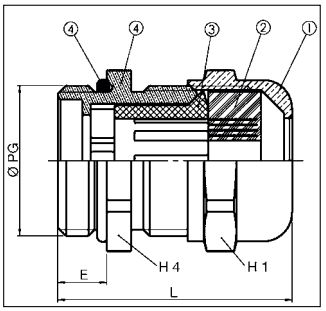

Materijal:
- 1/4: tijelo kabelske uvodnice / glava: mesing niklani
- 2: brtva: neopren
- 3: ECA-stezni prsten: polikarbonat
- 5: O-brtva: nitril

Radna temperatura:
-20°C do 80°C

Boje/izvedbe:
- vanjski navoj: PG
- kratki/dugi navoj
- sa višeslojnom brtvom

Svojstva:
certifikat: LCIE 99 ATEX 6030 X
tip zaštite: Ex e
testni standard: EN 60079-0, EN 60079-7, EN 61241-0, EN 61241-1
grupa uređaja: II
kategorija: 2 i 3
atmosfera: G / D
zona: 1, 2 , 21, 22

Upotreba:
- za područja ugrožena eksplozijom
- izrada strojeva i aparata
- tehnologija mjernih i kontrolnih instrumenata
- instalacije u proizvodnim postrojenjima

Material:
- 1/4: Gland element/Cap nut: nickel-plated brass
- 2: Sealing: Neoprene
- 3: ECA-Clamping-Ring: Polycarbonate
- 5: O-ring: Nitrile

Temperature range:
-20°C to 80°C

Colour(s)/Designs:
- External thread: PG
- short/long thread
- with punchable sealing ring

Characteristics:
Certificate: LCIE 99 ATEX 6030 X
Type of protection: Ex e
Test standard: EN 60079-0, EN 60079-7, EN 61241-0, EN 61241-1
Device group: II
Category: 2 and 3
Atmosphere: G / D
Zone: 1, 2, 21, 22

Applications:
- for explosion endangered areas
- Machine- and apparatus construction
- Measuring and control engineering
- Plant installations

vanjski navoj External thread	za kabel promjera mm Clamping range mm	duljina navoja (E) mm Thread length (E) mm	ključ veličine (H1) mm Across Flats (H1) mm	ključ veličine (H4) mm Across Flats (H4) mm	ukupna duljina (L) mm Complete length (L) mm	broj artikla niklano Art.-No. nickel-plated	JP kom. PU pcs.
kratki navoj, sa višeslojnom brtvom / short thread, with punchable sealing ring							
PG 9	3,0 - 5,5 - 8,5	6,0	17,0	17,0	25,0	4107609	50
PG 11	4,0 - 6,5 - 10,5	6,0	20,0	20,0	26,0	4107611	50
PG 13	5,0 - 8,0 - 12,5	6,5	22,0	22,0	28,0	4107613	50
PG 16	6,5 - 10,0 - 14,5	6,5	24,0	24,0	30,0	4107616	25
PG 21	8,0 - 12,0 - 18,5	7,0	30,0	30,0	35,0	4107621	25
PG 29	10,0 - 16,0 - 24,5	8,0	40,0	40,0	43,0	4107629	10
dugi navoj, sa višeslojnom brtvom / long thread, with punchable sealing ring							
PG 9	3,0 - 5,5 - 8,5	15,0	17,0	17,0	34,0	4107709	50
PG 11	4,0 - 6,5 - 10,5	15,0	20,0	20,0	35,0	4107711	50
PG 13	5,0 - 8,0 - 12,5	15,0	22,0	22,0	36,5	4107713	50
PG 16	6,5 - 10,0 - 14,5	15,0	24,0	24,0	38,5	4107716	25
PG 21	8,0 - 12,0 - 18,5	15,0	30,0	30,0	43,0	4107721	25
PG 29	10,0 - 16,0 - 24,5	15,0	40,0	40,0	50,0	4107729	10

Kabelska uvodnica ATEX Ex e WADI-TEC RED

Messing niklani
ECA-stezni prsten
PG-navoj, kratki

Cable gland ATEX Ex e WADI-TEC RED

nickel-plated brass
ECA-Clamping-Ring
PG-thread, short

RoHS | Ex | IP 68 | IP 66 | PG

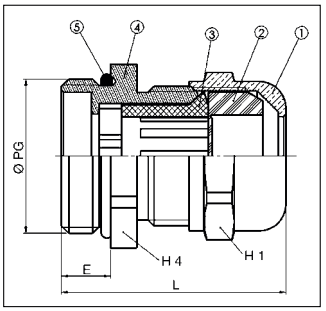

Materijal:
- 1/4: tijelo kabelske uvodnice / glava: mesing niklani
- 2: brtva: elastomer
- 3: ECA-stezni prsten: polikarbonat
- 5: O-brtva: nitril

Radna temperatura:
-20°C do 80°C

Boje/izvedbe:
- vanjski navoj: PG
- kratki navoj
- redukcijska kabelska uvodnica

Svojstva:
certifikat: LCIE 99 ATEX 6030 X
tip zaštite: Ex e
testni standard: EN 60079-0, EN 60079-7, EN 61241-0, EN 61241-1
grupa uređaja: II
kategorija: 2 i 3
atmosfera: G / D
zona: 1, 2 , 21, 22

Upotreba:
- za područja ugrožena eksplozijom
- izrada strojeva i aparata
- tehnologija mjernih i kontrolnih instrumenata
- instalacije u proizvodnim postrojenjima

Material:
- 1/4: Gland element/Cap nut: nickel-plated brass
- 2: Sealing: Elastomere
- 3: ECA-Clamping-Ring: Polycarbonate
- 5: O-ring: Nitrile

Temperature range:
-20°C to 80°C

Colour(s)/Designs:
- External thread: PG
- short thread
- Reduction cable gland

Characteristics:
Certificate: LCIE 99 ATEX 6030 X
Type of protection: Ex e
Test standard: EN 60079-0, EN 60079-7, EN 61241-0, EN 61241-1
Device group: II
Category: 2 and 3
Atmosphere: G / D
Zone: 1, 2, 21, 22

Applications:
- for explosion endangered areas
- Machine- and apparatus construction
- Measuring and control engineering
- Plant installations

vanjski navoj External thread	za kabel promjera mm Clamping range mm	duljina navoja (E) mm Thread length (E) mm	ključ veličine (H1) mm Across Flats (H1) mm	ključ veličine (H4) mm Across Flats (H4) mm	ukupna duljina (L) mm Complete length (L) mm	broj artikla niklano Art.-No. nickel-plated	JP kom. PU pcs.
PG 9/7 RED	3,0 - 6,0	6,0	14,0	17,0	25,0	4107901	50
PG 11/7 RED	3,0 - 6,0	6,0	14,0	21,0	26,0	4107902	50
PG 11/9 RED	5,0 - 8,0	6,0	17,0	21,0	26,0	4107903	50
PG 13/7 RED	3,0 - 6,0	6,5	14,0	22,0	28,0	4107904	50
PG 13/9 RED	5,0 - 8,0	6,5	17,0	22,0	28,0	4107905	50
PG 13/11 RED	6,0 - 10,0	6,5	20,0	22,0	28,0	4107906	50
PG 16/9 RED	5,0 - 8,0	6,5	17,0	24,0	26,0	4107907	50
PG 16/11 RED	6,0 - 10,0	6,5	20,0	24,0	28,0	4107908	50
PG 16/13 RED	8,0 - 12,0	6,5	22,0	24,0	30,0	4107909	50
PG 21/11 RED	6,0 - 10,0	6,5	20,0	30,0	30,0	4107910	20
PG 21/13 RED	8,0 - 12,0	6,5	22,0	30,0	32,0	4107911	20
PG 21/16 RED	9,5 - 14,0	6,5	24,0	30,0	32,0	4107912	20
PG 29/13 RED	8,0 - 12,0	8,0	22,0	40,0	35,0	4107913	20
PG 29/16 RED	9,5 - 14,0	8,0	24,0	40,0	38,0	4107914	20
PG 29/21 RED	11,5 - 18,0	8,0	30,0	40,0	40,0	4107915	20

Kabelska uvodnica ATEX Ex e WADI-TEC

mesing niklani
ECA-stezni prsten
NPT-navoj

Cable gland ATEX Ex e WADI-TEC

nickel-plated brass
ECA-Clamping-Ring
NPT-thread

RoHS | Ex | IP 68 | IP 66 | PG

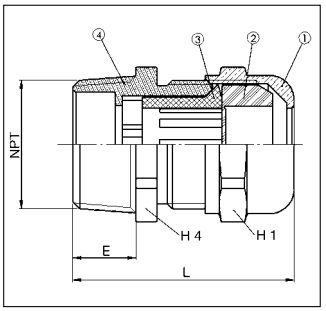

Materijal:
- 1/4: tijelo kabelske uvodnice / glava: mesing niklani
- 2: brtva: elastomer
- 3: ECA-stezni prsten: polikarbonat

Radna temperatura:
-20°C do 80°C

Boje/izvedbe:
- vanjski navoj: NPT

Svojstva:
certifikat: LCIE 99 ATEX 6030 X
tip zaštite: Ex e
testni standard: EN 60079-0, EN 60079-7, EN 61241-0, EN 61241-1
grupa uređaja: II
kategorija: 2 i 3
atmosfera: G / D
zona: 1, 2 , 21, 22

Upotreba:
- za područja ugrožena eksplozijom
- izrada strojeva i aparata
- tehnologija mjernih i kontrolnih instrumenata
- instalacije u proizvodnim postrojenjima

Material:
- 1/4: Gland element/Cap nut: nickel-plated brass
- 2: Sealing: Elastomere
- 3: ECA-Clamping-Ring: Polycarbonate

Temperature range:
-20°C to 80°C

Colour(s)/Designs:
- External thread: NPT

Characteristics:
Certificate: LCIE 99 ATEX 6030 X
Type of protection: Ex e
Test standard: EN 60079-0, EN 60079-7, EN 61241-0, EN 61241-1
Device group: II
Category: 2 and 3
Atmosphere: G / D
Zone: 1, 2, 21, 22

Applications:
- for explosion endangered areas
- Machine- and apparatus construction
- Measuring and control engineering
- Plant installations

vanjski navoj External thread	za kabel promjera mm Clamping range mm	duljina navoja (E) mm Thread length (E) mm	ključ veličine (H1) mm Across Flats (H1) mm	ključ veličine (H4) mm Across Flats (H4) mm	ukupna duljina (L) mm Complete length (L) mm	broj artikla niklano Art.-No. nickel-plated	JP kom. PU pcs.
NPT 3/8"	3,0 - 6,0	15,0	14,0	19,0	35,0	4107800	50
NPT 3/8"	5,0 - 8,0	15,0	17,0	19,0	35,0	4107801	50
NPT 1/2"	5,0 - 8,0	20,0	17,0	22,0	40,0	4107802	50
NPT 1/2"	6,0 - 10,0	20,0	20,0	22,0	42,0	4107803	50
NPT 1/2"	8,0 - 12,0	20,0	22,0	22,0	42,0	4107804	50
NPT 3/4"	9,5 - 14,0	20,0	24,0	30,0	45,0	4107805	20
NPT 3/4"	11,5 - 18,0	20,0	30,0	30,0	49,0	4107806	20
NPT 1"	15,0 - 24,0	25,0	40,0	40,0	60,0	4107807	10
NPT 1 1/4"	15,0 - 24,0	26,0	40,0	46,0	61,0	4107809	5
NPT 1 1/2"	23,0 - 30,0	26,0	50,0	50,0	67,0	4107810	5
NPT 1 1/2"	26,0 - 35,0	26,0	58,0	58,0	73,0	4107811	1
NPT 2"	35,0 - 40,0	27,0	64,0	64,0	76,0	4107812	1

Kabelska uvodnica ATEX Ex e WADI-TEC

mesing niklani
za plosnati kabel
metrički navoj, kratki

Cable gland ATEX Ex e WADI-TEC

nickel-plated brass
flat cable sealing
metric thread, short

RoHS | Ex | IP 68 | IP 66 | PG | EN 50262

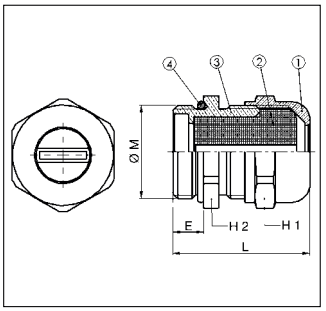

Materijal:
- 1/3: tijelo kabelske uvodnice / glava: mesing niklani
- 2: brtva: elastomer
- 4: O-brtva: nitril

Radna temperatura:
-20°C do 80°C

Boje/izvedbe:
- vanjski navoj: metrički
- kratki navoj
- za plosnati kabel
- brtva za plosnati kabel ovalni, zaobljeni ili pravokutni

Svojstva:
certifikat: LCIE 99 ATEX 6030 X
tip zaštite: Ex e
testni standard: EN 60079-0, EN 60079-7, EN 61241-0, EN 61241-1
grupa uređaja: II
kategorija: 2 i 3
atmosfera: G / D
zona: 1, 2 , 21, 22

Upotreba:
- za područja ugrožena eksplozijom
- izrada strojeva i aparata
- tehnologija mjernih i kontrolnih instrumenata
- instalacije u proizvodnim postrojenjima

Material:
- 1/3: Gland element/Cap nut: nickel-plated brass
- 2: Sealing: Elastomere
- 4: O-ring: Nitrile

Temperature range:
-20°C to 80°C

Colour(s)/Designs:
- External thread: metric
- short thread
- flat cable sealing
- sealing for flat cables oval, round or angular

Characteristics:
Certificate: LCIE 99 ATEX 6030 X
Type of protection: Ex e
Test standard: EN 60079-0, EN 60079-7, EN 61241-0, EN 61241-1
Device group: II
Category: 2 and 3
Atmosphere: G / D
Zone: 1, 2, 21, 22

Applications:
- for explosion endangered areas
- Machines and apparatus construction
- Measuring and control engineering
- Plant installations

					plosnati kabel, zaobljeni Flat cable, round		plosnati kabel, pravokutni Flat cable, angular		plosnati kabel, ovalni Flat cable, oval		
vanjski navoj External thread	duljina navoja (E) mm Thread length (E) mm	ključ veličine (H1) mm Across Flats (H1) mm	ključ veličine (H2) mm Across Flats (H2) mm	ukupna duljina (L) mm Complete length (L) mm	za kabel promjera mm Clamping range mm	broj artikla niklano Art.-No. nickel-plated	za kabel promjera mm Clamping range mm	broj artikla niklano Art.-No. nickel-plated	za kabel promjera mm Clamping range mm	broj artikla niklano Art.-No. nickel-plated	JP kom. PU pcs.
M 16 x 1,5	7,0	17,0	17,0	27,0	3,5 x 5,5	4224860					na upit
M 20 x 1,5	7,0	20,0	22,0	28,0	2,8 x 10,5	4224861					on request
M 20 x 1,5	7,0	22,0	22,0	29,0	3,0 x 12,0	4224862					na upit
M 20 x 1,5	7,0	20,0	22,0	28,0	3,5 x 9,0	4224863					on request
M 20 x 1,5	7,0	22,0	22,0	29,0	5,0 x 11,0	4224864			5,0 x 8,0	4224874	na upit
M 20 x 1,5	8,0	24,0	26,0	31,0					5,0 x 12,0	4224875	on request
M 20 x 1,5	7,0	20,0	22,0	28,0	4,0 x 6,0	4224865					na upit
M 25 x 1,5	8,0	24,0	26,0	31,0	5,0 x 12,0	4224866	8,0 x 12,0	4224885	5,0 x 12,0	4224876	on request
M 25 x 1,5	8,0	30,0	30,0	37,0	5,0 x 16,0	4224867	4,0 x 15,0	4224886	5,0 x 15,0	4224877	na upit
M 25 x 1,5	8,0	24,0	26,0	31,0	7,5 x 14,0	4224868			5,5 x 8,5	4224878	on request
M 25 x 1,5	8,0	30,0	30,0	37,0	5,0 x 17,0	4224869			5,0 x 16,0	4224879	na upit
M 25 x 1,5	8,0	24,0	26,0	31,0					6,0 x 10,0	4224880	on request
M 25 x 1,5	8,0	30,0	30,0	37,0	7,0 x 18,0	4224870					na upit
M 25 x 1,5	8,0	30,0	30,0	37,0	9,0 x 15,0	4224871			6,0 x 15,0	4224881	on request
M 25 x 1,5	8,0	24,0	26,0	31,0					7,0 x 14,0	4224882	na upit
M 25 x 1,5	8,0	30,0	30,0	37,0					7,0 x 16,5	4224883	on request
M 32 x 1,5	8,5	40,0	33,0	38,0	8,0 x 25,0	4224872					na upit
M 32 x 1,5	8,5	40,0	33,0	38,0	10,0 x 25,0	4224873			7,0 x 20,0	4224884	on request

Kabelska uvodnica ATEX Ex e WADI-TEC

mesing niklani
za plosnati kabel
metrički navoj, dugi

Cable gland ATEX Ex e WADI-TEC

nickel-plated brass
flat cable sealing
metric thread, long

RoHS | Ex | IP 68 | IP 66 | PG | EN 50262

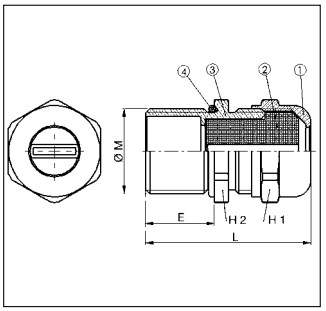

Materijal:
- 1/3: tijelo kabelske uvodnice / glava: mesing niklani
- 2: brtva: elastomer
- 4: O-brtva: nitril

Radna temperatura:
-20°C do 80°C

Boje/izvedbe:
- vanjski navoj: metrički
- dugi navoj
- za plosnati kabel
- brtva za plosnati kabel ovalni, zaobljeni ili pravokutni

Svojstva:
certifikat: LCIE 99 ATEX 6030 X
tip zaštite: Ex e
testni standard: EN 60079-0, EN 60079-7, EN 61241-0, EN 61241-1
grupa uređaja: II
kategorija: 2 i 3
atmosfera: G / D
zona: 1, 2 , 21, 22

Upotreba:
- za područja ugrožena eksplozijom
- izrada strojeva i aparata
- tehnologija mjernih i kontrolnih instrumenata
- instalacije u proizvodnim postrojenjima

Material:
- 1/3: Gland element/Cap nut: nickel-plated brass
- 2: Sealing: Elastomere
- 4: O-ring: Nitrile

Temperature range:
-20°C to 80°C

Colour(s)/Designs:
- External thread: metric
- long thread
- flat cable sealing
- sealing for flat cables oval, round or angular

Characteristics:
Certificate: LCIE 99 ATEX 6030 X
Type of protection: Ex e
Test standard: EN 60079-0, EN 60079-7, EN 61241-0, EN 61241-1
Device group: II
Category: 2 and 3
Atmosphere: G / D
Zone: 1, 2, 21, 22

Applications:
- for explosion endangered areas
- Machines and apparatus construction
- Measuring and control engineering
- Plant installations

3.4

					plosnati kabel, zaobljeni Flat cable, round		plosnati kabel, pravokutni Flat cable, angular		plosnati kabel, ovalni Flat cable, oval		
vanjski navoj External thread	duljina navoja (E) mm Thread length (E) mm	ključ veličine (H1) mm Across Flats (H1) mm	ključ veličine (H2) mm Across Flats (H2) mm	ukupna duljina (L) mm Complete length (L) mm	za kabel promjera mm Clamping range mm	broj artikla niklano Art.-No. nickel-plated	za kabel promjera mm Clamping range mm	broj artikla niklano Art.-No. nickel-plated	za kabel promjera mm Clamping range mm	broj artikla niklano Art.-No. nickel-plated	JP kom. PU pcs.
M 16 x 1,5	13,0	17,0	17,0	27,0	3,5 x 5,5	4224890					na upit
M 20 x 1,5	13,0	20,0	22,0	28,0	2,8 x 10,5	4224891					on request
M 20 x 1,5	13,0	22,0	22,0	29,0	3,0 x 12,0	4224892					na upit
M 20 x 1,5	13,0	20,0	22,0	28,0	3,5 x 9,0	4224893					on request
M 20 x 1,5	13,0	22,0	22,0	29,0	5,0 x 11,0	4224894			5,0 x 8,0	4224904	na upit
M 20 x 1,5	13,0	22,0	22,0	29,0					5,0 x 12,0	4224905	on request
M 20 x 1,5	13,0	20,0	22,0	28,0	4,0 x 6,0	4224895					na upit
M 25 x 1,5	14,0	24,0	26,0	31,0	5,0 x 12,0	4224896	8,0 x 12,0	4224915	5,0 x 12,0	4224906	on request
M 25 x 1,5	14,0	30,0	30,0	37,0	5,0 x 16,0	4224897	4,0 x 15,0	4224916	5,0 x 15,0	4224907	na upit
M 25 x 1,5	14,0	24,0	26,0	31,0	7,5 x 14,0	4224898			5,5 x 8,5	4224908	on request
M 25 x 1,5	14,0	30,0	30,0	37,0	5,0 x 17,0	4224899			5,0 x 16,0	4224899	na upit
M 25 x 1,5	14,0	24,0	26,0	31,0					6,0 x 10,0	4224910	on request
M 25 x 1,5	14,0	30,0	30,0	37,0	7,0 x 18,0	4224900					na upit
M 25 x 1,5	14,0	30,0	30,0	37,0	9,0 x 15,0	4224901			6,0 x 15,0	4224911	on request
M 25 x 1,5	14,0	24,0	26,0	31,0					7,0 x 14,0	4224912	na upit
M 25 x 1,5	14,0	30,0	30,0	37,0					7,0 x 16,5	4224913	on request
M 32 x 1,5	14,5	40,0	33,0	38,0	8,0 x 25,0	4224902					na upit
M 32 x 1,5	14,5	40,0	33,0	38,0	10,0 x 25,0	4224903			7,0 x 20,0	4224914	on request

Kabelska uvodnica ATEX Ex e WADI-TEC

mesing niklani
za plosnati kabel
PG-navoj, kratki

Cable gland ATEX Ex e WADI-TEC

nickel-plated brass
flat cable sealing
PG-thread, short

RoHS | Ex | IP 68 | IP 66 | PG

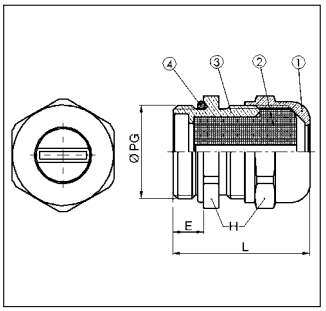

Materijal:
- 1/3: tijelo kabelske uvodnice / glava: mesing niklani
- 2: brtva: elastomer
- 4: O-brtva: nitril

Radna temperatura:
-20°C do 80°C

Boje/izvedbe:
- vanjski navoj: PG
- kratki navoj
- za plosnati kabel
- brtva za plosnati kabel ovalni, zaobljeni ili pravokutni

Svojstva:
certifikat: LCIE 99 ATEX 6030 X
tip zaštite: Ex e
testni standard: EN 60079-0, EN 60079-7, EN 61241-0, EN 61241-1
grupa uređaja: II
kategorija: 2 i 3
atmosfera: G / D
zona: 1, 2 , 21, 22

Upotreba:
- za područja ugrožena eksplozijom
- izrada strojeva i aparata
- tehnologija mjernih i kontrolnih instrumenata
- instalacije u proizvodnim postrojenjima

Material:
- 1/3: Gland element/Cap nut: nickel-plated brass
- 2: Sealing: Elastomere
- 4: O-ring: Nitrile

Temperature range:
-20°C to 80°C

Colour(s)/Designs:
- External thread: PG
- short thread
- flat cable sealing
- sealing for flat cables oval, round or angular

Characteristics:
Certificate: LCIE 99 ATEX 6030 X
Type of protection: Ex e
Test standard: EN 60079-0, EN 60079-7, EN 61241-0, EN 61241-1
Device group: II
Category: 2 and 3
Atmosphere: G / D
Zone: 1, 2, 21, 22

Applications:
- for explosion endangered areas
- Machines and apparatus construction
- Measuring and control engineering
- Plant installations

				plosnati kabel, zaobljeni Flat cable, round		plosnati kabel, pravokutni Flat cable, angular		plosnati kabel, ovalni Flat cable, oval		
vanjski navoj External thread	duljina navoja (E) mm Thread length (E) mm	ključ veličine (H) mm Across Flats (H) mm	ukupna duljina (L) mm Complete length (L) mm	za kabel promjera mm Clamping range mm	broj artikla niklano Art.-No. nickel-plated	za kabel promjera mm Clamping range mm	broj artikla niklano Art.-No. nickel-plated	za kabel promjera mm Clamping range mm	broj artikla niklano Art.-No. nickel-plated	JP kom. PU pcs.
PG 9	6,0	17,0	25,0	3,5 x 5,5	4224801					na upit
PG 11	6,0	20,0	26,0	2,8 x 10,5	4224802					on request
PG 11	6,0	20,0	26,0	3,5 x 9,0	4224803					na upit
PG 11	6,0	20,0	26,0	4,0 x 6,0	4224804					on request
PG 13	6,5	22,0	28,0	3,0 x 12,0	4224805			5,0 x 8,0	4224815	na upit
PG 13	6,5	22,0	28,0	5,0 x 11,0	4224806			5,0 x 12,0	4224816	on request
PG 16	6,5	24,0	30,0	5,0 x 12,0	4224807	8,0 x 12,0	4224826	5,0 x 12,0	4224817	na upit
PG 16	6,5	30,0	35,0	5,0 x 16,0	4224808			5,0 x 15,0	4224818	on request
PG 16	6,5	24,0	30,0	7,5 x 14,0	4224809			5,5 x 8,5	4224819	na upit
PG 16	6,5	30,0	35,0					6,0 x 15,0	4224820	on request
PG 16	6,5	24,0	30,0					6,0 x 10,0	4224821	na upit
PG 16	6,5	24,0	30,0					7,0 x 14,0	4224822	on request
PG 21	7,0	30,0	35,0	5,0 x 17,0	4224810	4,0 x 15,0	4224827	5,0 x 16,0	4224823	na upit
PG 21	7,0	30,0	35,0	7,0 x 18,0	4224811			7,0 x 16,5	4224824	on request
PG 21	7,0	40,0	43,0					7,0 x 20,0	4224825	na upit
PG 21	7,0	30,0	35,0	9,0 x 15,0	4224812					on request
PG 29	8,0	40,0	43,0	8,0 x 25,0	4224813					na upit
PG 29	8,0	40,0	43,0	10,0 x 25,0	4224814					on request

Kabelska uvodnica ATEX Ex e WADI-TEC Duplo

mesing niklani
brtva sa više otvora
metrički navoj, kratki

Cable gland ATEX Ex e WADI-TEC Duplo

nickel-plated brass
multi-holed sealing
metric thread, short

RoHS | Ex | IP 68 | IP 66 | PG | EN 50262

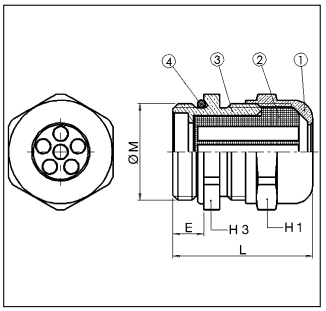

Materijal:
- 1/3: tijelo kabelske uvodnice / glava: mesing niklani
- 2: brtva: elastomer
- 4: O-brtva: nitril

Radna temperatura:
-20°C do 80°C

Boje/izvedbe:
- vanjski navoj: metrički
- kratki navoj
- brtva sa više otvora
- zabrtvljeni otvori
- nije potrebno čepiti otvor brtve

Svojstva:

certifikat:	LCIE 99 ATEX 6030 X
tip zaštite:	Ex e
testni standard:	EN 60079-0, EN 60079-7, EN 61241-0, EN 61241-1
grupa uređaja:	II
kategorija:	2 i 3
atmosfera:	G / D
zona:	1, 2 , 21, 22

Upotreba:
- za područja ugrožena eksplozijom
- izrada strojeva i aparata
- tehnologija mjernih i kontrolnih instrumenata
- instalacije u proizvodnim postrojenjima

Material:
- 1/3: Gland element/Cap nut: nickel-plated brass
- 2: Seal: Elastomere
- 4: O-ring: Nitrile

Temperature range:
-20°C to 80°C

Colour(s)/Designs:
- External thread: metric
- short thread
- multi-holed sealing
- Blind hole sealing
- No blind pin required

Characteristics:

Certificate:	LCIE 99 ATEX 6030 X
Type of protection:	Ex e
Test standard:	EN 60079-0, EN 60079-7, EN 61241-0, EN 61241-1
Device group:	II
Category:	2 and 3
Atmosphere:	G / D
Zone:	1, 2, 21, 22

Applications:
- for explosion endangered areas
- Machines and apparatus construction
- Measuring and control
- Plant installations

3.4

vanjski navoj External thread	količina Quantity	promjer otvora mm Hole diameter mm	duljina navoja (E) mm Thread length (E) mm	ključ veličine (H1) mm Across Flats (H1) mm	ključ veličine (H3) mm Across Flats (H3) mm	ukupna duljina (L) mm Complete length (L) mm	broj artikla niklano Art. no. nickel-plated	JP kom. PU pcs.
M 16 x 1,5	2 x	1,0	7,0	17,0	17,0	13,0	4247830	na upit
M 16 x 1,5	2 x	3,0	7,0	17,0	17,0	13,0	4247831	on request
M 16 x 1,5	2 x	3,5	7,0	17,0	17,0	13,0	4247832	na upit
M 16 x 1,5	2 x	4,0	7,0	17,0	17,0	13,0	4247833	on request
M 16 x 1,5	3 x	3,0	7,0	17,0	17,0	13,0	4247834	na upit
M 20 x 1,5	2 x	2,3	7,0	20,0	22,0	28,0	4247835	on request
M 20 x 1,5	2 x	3,0	7,0	22,0	22,0	29,0	4247836	na upit
M 20 x 1,5	2 x	3,5	7,0	20,0	22,0	28,0	4247837	on request
M 20 x 1,5	2 x	5,0	7,0	22,0	22,0	29,0	4247838	na upit
M 20 x 1,5	2 x	4,0	7,0	20,0	22,0	28,0	4247839	on request
M 20 x 1,5	2 x	6,0	7,0	22,0	22,0	29,0	4247840	na upit
M 20 x 1,5	3 x	3,5	7,0	20,0	22,0	28,0	4247841	on request
M 20 x 1,5	3 x	2,0	7,0	22,0	22,0	29,0	4247842	na upit
M 20 x 1,5	4 x	1,5	7,0	20,0	22,0	28,0	4247843	on request
M 20 x 1,5	3 x	3,0	7,0	22,0	22,0	29,0	4247844	na upit
M 20 x 1,5	4 x	3,5	7,0	20,0	22,0	28,0	4247845	on request
M 20 x 1,5	3 x	4,0	7,0	22,0	22,0	29,0	4247846	na upit
M 20 x 1,5	6 x	2,0	7,0	20,0	22,0	28,0	4247847	on request
M 20 x 1,5	3 x	5,3	7,0	22,0	22,0	29,0	4247848	na upit
M 20 x 1,5	6 x	2,5	7,0	20,0	22,0	28,0	4247849	on request
M 20 x 1,5	4 x	3,0	7,0	22,0	22,0	29,0	4247850	na upit
M 20 x 1,5	4 x	4,0	7,0	22,0	22,0	29,0	4247851	on request
M 20 x 1,5	6 x	3,5	7,0	22,0	22,0	29,0	4247852	na upit
M 20 x 1,5	10 x	2,0	7,0	22,0	22,0	29,0	4247853	on request
M 25 x 1,5	2 x	4,0	8,0	24,0	26,0	31,0	4247854	na upit
M 25 x 1,5	2 x	4,5	8,0	30,0	30,0	37,0	4247855	on request
M 25 x 1,5	2 x	5,0	8,0	24,0	26,0	31,0	4247856	na upit
M 25 x 1,5	2 x	8,0	8,0	30,0	30,0	37,0	4247857	on request
M 25 x 1,5	2 x	6,0	8,0	24,0	26,0	31,0	4247858	na upit
M 25 x 1,5	3 x	7,0	8,0	30,0	30,0	37,0	4247859	on request
M 25 x 1,5	2 x	7,0	8,0	24,0	26,0	31,0	4247860	na upit
M 25 x 1,5	3 x	8,0	8,0	30,0	30,0	37,0	4247861	on request
M 25 x 1,5	3 x	3,0	8,0	24,0	26,0	31,0	4247862	na upit
M 25 x 1,5	4 x	5,0	8,0	30,0	30,0	37,0	4247863	on request
M 25 x 1,5	3 x	4,0	8,0	24,0	26,0	31,0	4247864	na upit
M 25 x 1,5	4 x	6,0	8,0	30,0	30,0	37,0	4247865	on request
M 25 x 1,5	3 x	5,0	8,0	24,0	26,0	37,0	4247866	na upit
M 25 x 1,5	5 x	5,0	8,0	30,0	30,0	37,0	4247867	on request

vanjski navoj External thread	količina Quantity	promjer otvora mm Hole diameter mm	duljina navoja (E) mm Thread length (E) mm	ključ veličine (H1) mm Across Flats (H1) mm	ključ veličine (H3) mm Across Flats (H3) mm	ukupna duljina (L) mm Complete length (L) mm	broj artikla niklano Art. no. nickel-plated	JP kom. PU pcs.
M 25 x 1,5	3 x	5,6	8,0	24,0	26,0	31,0	4247868	na upit
M 25 x 1,5	5 x	6,0	8,0	30,0	30,0	37,0	4247869	on request
M 25 x 1,5	3 x	6,0	8,0	24,0	26,0	31,0	4247870	na upit
M 25 x 1,5	5 x	6,5	8,0	30,0	30,0	37,0	4247871	on request
M 25 x 1,5	4 x	4,0	8,0	24,0	26,0	31,0	4247872	na upit
M 25 x 1,5	6 x	5,0	8,0	30,0	30,0	37,0	4247873	on request
M 25 x 1,5	5 x	4,0	8,0	24,0	26,0	31,0	4247874	na upit
M 25 x 1,5	8 x	4,0	8,0	30,0	30,0	37,0	4247875	on request
M 25 x 1,5	6 x	4,0	8,0	24,0	26,0	31,0	4247876	na upit
M 25 x 1,5	8 x	5,0	8,0	30,0	30,0	37,0	4247877	on request
M 25 x 1,5	21 x	2,0	8,0	30,0	30,0	37,0	4247878	na upit
M 32 x 1,5	2 x	4,5	8,5	30,0	33,0	38,0	4247879	on request
M 32 x 1,5	2 x	8,0	8,5	30,0	33,0	38,0	4247880	na upit
M 32 x 1,5	2 x	9,0	8,5	40,0	40,0	45,0	4247881	on request
M 32 x 1,5	2 x	11,0	8,5	40,0	40,0	45,0	4247882	na upit
M 32 x 1,5	2 x	12,0	8,5	40,0	40,0	45,0	4247883	on request
M 32 x 1,5	3 x	7,0	8,5	30,0	33,0	38,0	4247884	na upit
M 32 x 1,5	3 x	8,0	8,5	30,0	33,0	38,0	4247885	on request
M 32 x 1,5	3 x	9,0	8,5	40,0	40,0	45,0	4247886	na upit
M 32 x 1,5	3 x	11,0	8,5	40,0	40,0	45,0	4247887	on request
M 32 x 1,5	4 x	5,0	8,5	30,0	33,0	38,0	4247888	na upit
M 32 x 1,5	4 x	6,0	8,5	30,0	33,0	38,0	4247889	on request
M 32 x 1,5	4 x	8,0	8,5	40,0	40,0	45,0	4247890	na upit
M 32 x 1,5	4 x	9,0	8,5	40,0	40,0	45,0	4247891	on request
M 32 x 1,5	4 x	10,0	8,5	40,0	40,0	45,0	4247892	na upit
M 32 x 1,5	5 x	5,0	8,5	30,0	33,0	38,0	4247893	on request
M 32 x 1,5	5 x	6,0	8,5	30,0	33,0	38,0	4247894	na upit
M 32 x 1,5	5 x	6,5	8,5	30,0	33,0	38,0	4247895	on request
M 32 x 1,5	6 x	4,0	8,5	30,0	33,0	38,0	4247896	na upit
M 32 x 1,5	6 x	5,0	8,5	30,0	33,0	38,0	4247897	on request
M 32 x 1,5	6 x	6,0	8,5	40,0	40,0	45,0	4247898	na upit
M 32 x 1,5	6 x	6,5	8,5	40,0	40,0	45,0	4247899	on request
M 32 x 1,5	6 x	7,0	8,5	40,0	40,0	45,0	4247900	na upit
M 32 x 1,5	7 x	6,0	8,5	40,0	40,0	45,0	4247901	on request
M 32 x 1,5	7 x	7,0	8,5	40,0	40,0	45,0	4247902	na upit
M 32 x 1,5	8 x	4,0	8,5	30,0	33,0	38,0	4247903	on request
M 32 x 1,5	8 x	5,0	8,5	40,0	40,0	45,0	4247904	na upit
M 32 x 1,5	8 x	6,0	8,5	40,0	40,0	45,0	4247905	on request
M 32 x 1,5	10 x	6,0	8,5	40,0	40,0	45,0	4247906	na upit
M 32 x 1,5	11 x	5,0	8,5	40,0	40,0	45,0	4247907	on request
M 32 x 1,5	21 x	2,0	8,5	30,0	33,0	38,0	4247908	na upit
M 32 x 1,5	28 x	3,0	8,5	40,0	40,0	45,0	4247909	on request

Kabelska uvodnica ATEX Ex e WADI-TEC Duplo

Messing niklani brtva sa više otvora PG-navoj, kratki

Cable gland ATEX Ex e WADI-TEC Duplo

nickel-plated brass multi-holed sealing PG-thread, short

RoHS | Ex | IP 68 | IP 66 | PG

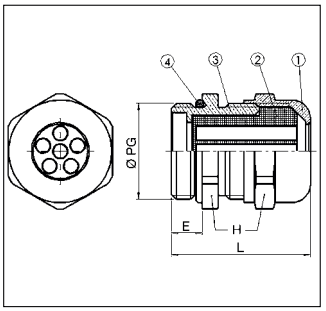

Materijal:
- 1/3: tijelo kabelske uvodnice / glava: mesing niklani
- 2: brtva: elastomer
- 4: O-brtva: nitril

Radna temperatura:
-20°C do 80°C

Boje/izvedbe:
- vanjski navoj: PG
- kratki navoj
- brtva sa više otvora
- zabrtvljeni otvori
- nije potrebno čepiti otvor brtve

Svojstva:

certifikat:	LCIE 99 ATEX 6030 X/1
tip zaštite:	Ex e
testni standard:	EN 60079-0, EN 60079-7, EN 61241-0, EN 61241-1
grupa uređaja:	II
kategorija:	2 i 3
atmosfera:	G / D
zona:	1, 2 , 21, 22

Upotreba:
- za područja ugrožena eksplozijom
- izrada strojeva i aparata
- tehnologija mjernih i kontrolnih instrumenata
- instalacije u proizvodnim postrojenjima

Material:
- 1/3: Gland element/Cap nut: nickel-plated brass
- 2: Sealing: Elastomere
- 4: O-ring: Nitrile

Temperature range:
-20°C to 80°C

Colour(s)/Designs:
- External thread: PG
- short thread
- multi-holed sealing
- Blind hole sealing
- No blind pin required

Characteristics:

Certificate:	LCIE 99 ATEX 6030 X/1
Type of protection:	Ex e
Test standard:	EN 60079-0, EN 60079-7, EN 61241-0, EN 61241-1
Device group:	II
Category:	2 and 3
Atmosphere:	G / D
Zone:	1, 2, 21, 22

Applications:
- for explosion endangered areas
- Machines and apparatus construction
- Measuring and control engineering
- Plant installations

vanjski navoj External thread	količina Quantity	promjer otvora mm Hole diameter mm	duljina navoja (E) mm Thread length (E) mm	ključ veličine (H) mm Across Flats (H) mm	ukupna duljina (L) mm Complete length (L) mm	broj artikla niklano Art.-No. nickel-plated	JP kom. PU pcs.
PG 7	1 x	4,0	5,0	14,0	24,0	4247600	na upit
PG 7	1 x	5,0	5,0	14,0	24,0	4247601	on request
PG 9	1 x	5,0	6,0	17,0	25,0	4247602	na upit
PG 9	2 x	1,0	6,0	17,0	25,0	4247603	on request
PG 9	2 x	3,0	6,0	17,0	25,0	4247604	na upit
PG 9	2 x	3,5	6,0	17,0	25,0	4247605	on request
PG 9	2 x	4,0	6,0	17,0	25,0	4247606	na upit
PG 9	3 x	3,0	6,0	17,0	25,0	4247607	on request
PG 9	4 x	3,0	6,0	20,0	26,0	4247608	na upit
PG 9	4 x	4,0	6,0	20,0	26,0	4247609	on request
PG 11	2 x	2,3	6,0	20,0	26,0	4247610	na upit
PG 11	2 x	3,0	6,0	20,0	26,0	4247611	on request
PG 11	2 x	3,5	6,0	20,0	26,0	4247612	na upit
PG 11	2 x	4,0	6,0	20,0	26,0	4247613	on request
PG 11	2 x	5,0	6,0	20,0	26,0	4247614	na upit
PG 11	3 x	3,0	6,0	20,0	26,0	4247615	on request
PG 11	3 x	3,5	6,0	20,0	26,0	4247616	na upit
PG 11	3 x	4,0	6,0	20,0	26,0	4247617	on request
PG 11	4 x	1,5	6,0	20,0	26,0	4247618	na upit
PG 11	4 x	3,5	6,0	20,0	26,0	4247619	on request
PG 11	6 x	2,0	6,0	20,0	26,0	4247620	na upit
PG 11	6 x	2,5	6,0	20,0	26,0	4247621	on request
PG 11	3 x	5,3	6,5	22,0	28,0	4247622	na upit
PG 11	2 x	6,0	6,5	24,0	30,0	4247623	on request
PG 11	2 x	7,0	6,5	24,0	30,0	4247624	na upit
PG 11	3 x	5,0	6,5	24,0	30,0	4247625	on request
PG 13	2 x	3,0	6,5	22,0	28,0	4247626	na upit
PG 13	2 x	5,0	6,5	22,0	28,0	4247627	on request
PG 13	2 x	6,0	6,5	22,0	28,0	4247628	na upit
PG 13	3 x	2,0	6,5	22,0	28,0	4247629	on request
PG 13	3 x	3,0	6,5	22,0	28,0	4247630	na upit
PG 13	3 x	4,0	6,5	22,0	28,0	4247631	on request
PG 13	3 x	5,0	6,5	22,0	28,0	4247632	na upit
PG 13	4 x	3,0	6,5	22,0	28,0	4247633	on request
PG 13	4 x	4,0	6,5	22,0	28,0	4247634	na upit
PG 13	6 x	3,5	6,5	22,0	28,0	4247635	on request
PG 13	10 x	2,0	6,5	22,0	28,0	4247636	na upit
PG 13	3 x	5,3	6,5	24,0	30,0	4247637	on request

vanjski navoj External thread	količina Quantity	promjer otvora mm Hole diameter mm	duljina navoja (E) mm Thread length (E) mm	ključ veličine (H) mm Across Flats (H) mm	ukupna duljina (L) mm Complete length (L) mm	broj artikla niklano Art.-No. nickel-plated	JP kom. PU pcs.
PG 13	3 x	6,0	6,5	24,0	30,0	4247638	na upit
PG 13	4 x	5,0	6,5	24,0	30,0	4247639	on request
PG 13	4 x	5,3	6,5	24,0	30,0	4247640	na upit
PG 16	2 x	4,0	6,5	24,0	30,0	4247641	on request
PG 16	2 x	5,0	6,5	24,0	30,0	4247642	na upit
PG 16	2 x	6,0	6,5	24,0	30,0	4247643	on request
PG 16	2 x	7,0	6,5	24,0	30,0	4247644	na upit
PG 16	3 x	3,0	6,5	24,0	30,0	4247645	on request
PG 16	3 x	4,0	6,5	24,0	30,0	4247646	na upit
PG 16	3 x	5,0	6,5	24,0	30,0	4247647	on request
PG 16	3 x	5,6	6,5	24,0	30,0	4247648	na upit
PG 16	3 x	6,0	6,5	24,0	30,0	4247649	on request
PG 16	3 x	8,0	6,5	24,0	30,0	4247650	na upit
PG 16	4 x	4,0	6,5	24,0	30,0	4247651	on request
PG 16	5 x	4,0	6,5	24,0	30,0	4247652	na upit
PG 16	6 x	4,0	6,5	24,0	30,0	4247653	on request
PG 16	2 x	8,0	7,0	30,0	35,0	4247654	na upit
PG 16	2 x	9,0	7,0	30,0	35,0	4247655	on request
PG 16	3 x	7,0	7,0	30,0	35,0	4247656	na upit
PG 16	4 x	5,0	7,0	30,0	35,0	4247657	on request
PG 16	4 x	6,0	7,0	30,0	35,0	4247658	na upit
PG 16	5 x	5,0	7,0	30,0	35,0	4247659	on request
PG 16	7 x	4,0	7,0	30,0	35,0	4247660	na upit
PG 21	2 x	4,5	7,0	30,0	35,0	4247661	on request
PG 21	2 x	8,0	7,0	30,0	35,0	4247662	na upit
PG 21	3 x	7,0	7,0	30,0	35,0	4247663	on request
PG 21	3 x	8,0	7,0	30,0	35,0	4247664	na upit
PG 21	4 x	5,0	7,0	30,0	35,0	4247665	on request
PG 21	4 x	6,0	7,0	30,0	35,0	4247666	na upit
PG 21	5 x	5,0	7,0	30,0	35,0	4247667	on request
PG 21	5 x	6,0	7,0	30,0	35,0	4247668	na upit
PG 21	5 x	6,5	7,0	30,0	35,0	4247669	on request
PG 21	6 x	4,0	7,0	30,0	35,0	4247670	na upit
PG 21	6 x	5,0	7,0	30,0	35,0	4247671	on request
PG 21	8 x	4,0	7,0	30,0	35,0	4247672	na upit
PG 21	8 x	5,0	7,0	30,0	35,0	4247673	on request
PG 21	21 x	2,0	7,0	30,0	35,0	4247674	na upit
PG 21	2 x	8,7	8,0	40,0	43,0	4247675	on request
PG 21	2 x	9,0	8,0	40,0	43,0	4247676	na upit
PG 21	2 x	11,0	8,0	40,0	43,0	4247677	on request
PG 21	3 x	9,0	8,0	40,0	43,0	4247678	na upit
PG 21	4 x	7,5	8,0	40,0	43,0	4247679	on request
PG 21	4 x	8,0	8,0	40,0	43,0	4247680	na upit
PG 21	6 x	6,0	8,0	40,0	43,0	4247681	on request
PG 21	6 x	6,5	8,0	40,0	43,0	4247682	na upit
PG 21	6 x	7,0	8,0	40,0	43,0	4247683	on request
PG 21	7 x	6,0	8,0	40,0	43,0	4247684	na upit
PG 21	11 x	5,0	8,0	40,0	43,0	4247685	on request
PG 21	28 x	3,0	8,0	40,0	43,0	4247686	na upit
PG 29	2 x	9,0	8,0	40,0	43,0	4247687	on request
PG 29	2 x	11,0	8,0	40,0	43,0	4247688	na upit
PG 29	2 x	12,0	8,0	40,0	43,0	4247689	on request
PG 29	3 x	9,0	8,0	40,0	43,0	4247690	na upit
PG 29	3 x	11,0	8,0	40,0	43,0	4247691	on request
PG 29	4 x	8,0	8,0	40,0	43,0	4247692	na upit
PG 29	4 x	9,0	8,0	40,0	43,0	4247693	on request
PG 29	4 x	10,0	8,0	40,0	43,0	4247694	na upit
PG 29	6 x	6,0	8,0	40,0	43,0	4247695	on request
PG 29	6 x	6,5	8,0	40,0	43,0	4247696	na upit
PG 29	6 x	7,0	8,0	40,0	43,0	4247697	on request
PG 29	7 x	6,0	8,0	40,0	43,0	4247698	na upit
PG 29	7 x	7,0	8,0	40,0	43,0	4247699	on request
PG 29	8 x	5,0	8,0	40,0	43,0	4247700	na upit
PG 29	8 x	6,0	8,0	40,0	43,0	4247701	on request
PG 29	10 x	6,0	8,0	40,0	43,0	4247702	na upit
PG 29	11 x	5,0	8,0	40,0	43,0	4247703	on request
PG 29	28 x	3,0	8,0	40,0	43,0	4247704	na upit

Kabelska uvodnica ATEX Ex e

nehrđajući čelik 1.4404, INOX 316L, metrički navoj, kratki

Cable gland ATEX Ex e

stainless steel 1.4404, INOX 316L, metric thread, short

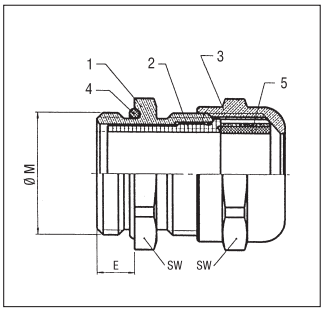

RoHS | IP 68 | EN 50262

Materijal:
- 1/3: tijelo kabelske uvodnice/ glava: nehrđajući čelik 1.4404, INOX 316L
- 2: stezni prsten: poliamid 6
- 4: brtveni prsten za vanjski navoj: nitril
- 5: brtva: neopren

Radna temperatura:
-40°C do 100°C

Boje/izvedbe:
- vanjski navoj: metrički
- kratki navoj
- raspoloživa sa redukcijskom brtvom

Eigenschaften:
- maksimalna zaštita od izvlačenja kabela
- nepropusnost za vodu i plinove
- dodatni brtveni prsten (4) od nitrila na tijelu kabelske uvodnice

Pribor (vidi poglavlje…):
- Matice (3.3)
- Montažni alat Mon.Za (3.1)

Upotreba:
- strojevi i uređaji
- tehnologija automatizacije
- prehrambena industrija
- Offshore uređaji
- vjetroelektrane

Material:
- 1/3: Gland element/Cap nut: stainless steel 1.4404, INOX 316L
- 2: Clamping shell: Polyamide 6
- 4: Sealing-Ring for External thread: Nitrile
- 5: Sealing: Neoprene

Temperture range:
-40°C to 100°C

Colour(s)/Designs:
- External thread: metric
- short thread
- reduction sealing insert

Characteristics:
- maximum strain relief through clamp lamella
- gas and water-tight
- additional Nitrile sealing-ring (4) on the gland element

Accessories (see chapter…):
- lock nuts (3.3)
- Mounting tool Mon.Za (3.1)

Applications:
- Machine and apparatus construction
- Automation technology
- Food Industries
- Off-Shore apparatus
- Wind power station

vanjski navoj External thread	za kabel promjera mm Clamping range mm	duljina navoja (E) mm Thread length (E) mm	SW mm SW mm	broj artikla nehrđajući čelik Art. no. stainless steel	JP kom. PU pcs.
M 12 x 1,5	2,5 - 6,5	5,0	14,0	4108712	50
M 16 x 1,5	4,0 - 9,5	5,0	19,0	4108716	50
M 20 x 1,5	7,0 - 13,0	6,0	22,0	4108720	50
M 25 x 1,5	8,0 - 16,0	7,0	28,0	4108725	25
M 32 x 1,5	11,0 - 21,0	8,0	36,0	4108732	20
M 40 x 1,5	15,0 - 27,0	8,0	42,0	4108740	10
M 50 x 1,5	22,0 - 35,0	9,0	55,0	4108750	5
M 63 x 1,5	35,0 - 48,0	10,0	65,0	4108763	5

Kabelska uvodnica ATEX Ex e WADI-TEC

nehrđajući čelik 1.4404, INOX 316L
ECA-stezni prsten
metrički navoj, dugi

Cable gland ATEX Ex e WADI-TEC

Stainless steel 1.4404, INOX 316L
ECA-Clamping-Ring
metric thread, long

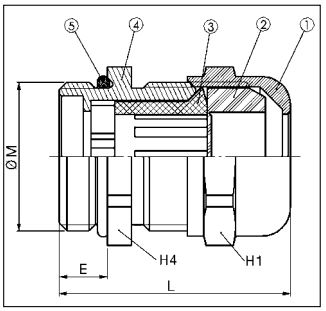

RoHS | Ex | IP 68 | IP 66 | PG | EN 50262

Materijal:
- 1/4: tijelo kabelske uvodnice / glava: nehrđajući čelik 1.4404, INOX 316L
- 2: brtva: elastomer
- 3: ECA-stezni prsten: polikarbonat
- 5: O-brtva: nitril

Radna temperatura:
-20°C do 80°C

Boje/izvedbe:
- vanjski navoj: metrički
- dugi navoj

Svojstva:

certifikat:	LCIE 99 ATEX 6030 X
tip zaštite:	Ex e
testni standard:	EN 60079-0, EN 60079-7, EN 61241-0, EN 61241-1
grupa uređaja:	II
kategorija:	2 i 3
atmosfera:	G / D
zona:	1, 2 , 21, 22

Upotreba:
- za područja ugrožena eksplozijom
- izrada strojeva i aparata
- tehnologija mjernih i kontrolnih instrumenata
- instalacije u proizvodnim postrojenjima

Material:
- 1/4: Gland element/Cap nut: Stainless steel 1.4404, INOX 316L
- 2: Sealing: Elastomere
- 3: ECA-Clamping-Ring: Polycarbonate
- 5: O-ring: Nitrile

Temperature range:
-20°C to 80°C

Colour(s)/Designs:
- External thread: metric
- long thread

Characteristics:

Certificate:	LCIE 99 ATEX 6030 X
Type of protection:	Ex e
Test standard:	EN 60079-0, EN 60079-7, EN 61241-0, EN 61241-1
Device group:	II
Category:	2 and 3
Atmosphere:	G / D
Zone:	1, 2, 21, 22

Applications:
- for explosion endangered areas
- Machine- and apparatus construction
- Measuring and control engineering
- Plant installations

vanjski navoj External thread	za kabel promjera mm Clamping range mm	duljina navoja (E) mm Thread length (E) mm	ključ veličine (H1) mm Across Flats (H1) mm	ključ veličine (H4) mm Across Flats (H4) mm	ukupna duljina (L) mm Complete length (L) mm	broj artikla nehrđajući čelik Art.-No. stainless steel	JP kom. PU pcs.
M 12 x 1,5	3,0 - 6,0	13,0	14,0	14,0	33,0	4222501	50
M 16 x 1,5	3,0 - 6,0	13,0	14,0	18,0	33,0	4222502	50
M 16 x 1,5	5,0 - 8,0	13,0	17,0	18,0	33,0	4222503	50
M 20 x 1,5	6,0 - 10,0	13,0	20,0	22,0	34,0	4222504	50
M 20 x 1,5	8,0 - 12,0	13,0	22,0	22,0	35,0	4222505	50
M 25 x 1,5	9,5 - 14,0	14,0	24,0	27,0	37,0	4222506	20
M 25 x 1,5	11,5 - 18,0	14,0	30,0	30,0	43,0	4222507	20
M 32 x 1,5	11,5 - 18,0	14,5	30,0	34,0	44,0	4222508	20
M 32 x 1,5	15,0 - 24,0	14,5	40,0	40,0	51,0	4222509	20
M 40 x 1,5	15,0 - 24,0	14,5	40,0	42,0	51,0	4222510	20
M 50 x 1,5	23,0 - 30,0	15,5	50,0	55,0	57,0	4222511	10
M 63 x 1,5	26,0 - 35,0	16,5	58,0	70,0	64,0	4222512	5

Kabelska uvodnica ATEX Ex e WADI-TEC

nehrđajući čelik 1.4404, INOX 316L
ECA-stezni prsten
PG-navoj, lang

Cable gland ATEX Ex e WADI-TEC

Stainless steel 1.4404, INOX 316L
ECA-Clamping-Ring
PG-thread, long

RoHS | IP 68 | IP 66

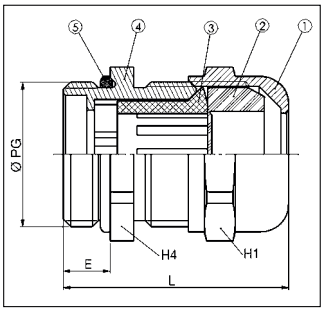

Materijal:
- 1/4: tijelo kabelske uvodnice / glava: nehrđajući čelik 1.4404, INOX 316L
- 2: brtva: elastomer
- 3: ECA-stezni prsten: polikarbonat
- 5: O-brtva: nitril

Radna temperatura:
-20°C do 80°C

Boje/izvedbe:
- vanjski navoj: PG
- dugi navoj

Svojstva:

certifikat:	LCIE 99 ATEX 6030 X
tip zaštite:	Ex e
testni standard:	EN 60079-0, EN 60079-7, EN 61241-0, EN 61241-1
grupa uređaja:	II
kategorija:	2 i 3
atmosfera:	G / D
zona:	1, 2 , 21, 22

Upotreba:
- za područja ugrožena eksplozijom
- izrada strojeva i aparata
- tehnologija mjernih i kontrolnih instrumenata
- instalacije u proizvodnim postrojenjima

Material:
- 1/4: Gland element/Cap nut: Stainless steel 1.4404, INOX 316L
- 2: Sealing: Elastomere
- 3: ECA-Clamping-Ring: Polycarbonate
- 5: O-ring: Nitrile

Temperature range:
-20°C to 80°C

Colour(s)/Designs:
- External thread: PG
- long thread

Characteristics:

Certificate:	LCIE 99 ATEX 6030 X
Type of protection:	Ex e
Test standard:	EN 60079-0, EN 60079-7, EN 61241-0, EN 61241-1
Device group:	II
Category:	2 and 3
Atmosphere:	G / D
Zone:	1, 2, 21, 22

Applications:
- for explosion endangered areas
- Machine- and apparatus construction
- Measuring and control engineering
- Plant installations

vanjski navoj External thread	za kabel promjera mm Clamping range mm	duljina navoja (E) mm Thread length (E) mm	ključ veličine (H1) mm Across Flats (H1) mm	ključ veličine (H4) mm Across Flats (H4) mm	ukupna duljina (L) mm Complete length (L) mm	broj artikla nehrđajući čelik Art.-No. stainless steel	JP kom. PU pcs.
PG 7	3,0 - 6,0	15,0	14,0	14,0	34,0	4222521	50
PG 9	5,0 - 8,0	15,0	17,0	17,0	34,0	4222522	50
PG 11	6,0 - 10,0	15,0	20,0	20,0	35,0	4222523	50
PG 13	8,0 - 12,0	15,0	22,0	22,0	36,5	4222524	50
PG 16	9,5 - 14,0	15,0	24,0	24,0	38,5	4222525	25
PG 21	11,5 - 18,0	15,0	30,0	30,0	43,0	4222526	20
PG 29	15,0 - 24,0	15,0	40,0	40,0	50,0	4222527	15
PG 36	23,0 - 30,0	18,0	50,0	50,0	59,0	4222528	10
PG 42	26,0 - 35,0	18,0	58,0	58,0	65,0	4222529	10
PG 48	35,0 - 40,0	18,0	64,0	64,0	67,0	4222530	10

Kabelska uvodnica ATEX Ex d/e 1F

mesing niklani/mesing
metrički navoj

Cable gland ATEX Ex d/e 1F

nickel-plated brass/blank
metric thread

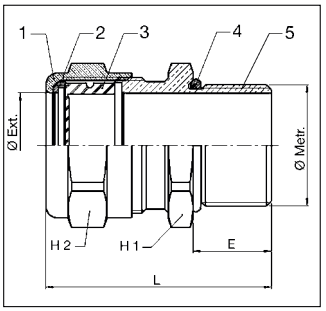

RoHS | Ex | IP 68 | IP 66 | PG | EN 50262

Materijal:
- 1/5: tijelo uvodnice: mesing niklani/mesing
- 2: pritisni prsten: polikarbonat
- 3: brtva: neopren
- 4: O-brtva: nitril

Napomena:
raspoloživa i sa Viton brtvom
temperatura za Viton: -20°C do 200°C
nehrđajući čelik na upit

Radna temperatura:
-40°C do 100°C

Boje/izvedbe:
- vanjski navoj: metrički
- za neekranizirane kabele
- 1F: brtva vanjskog omotača

Svojstva:

certifikat:	LCIE 05 ATEX 6146 X
tip zaštite:	Ex d/e
testni standard:	EN 60079-0, EN 60079-1, EN 60079-7, EN 61241-0, EN 61241-1
grupa uređaja:	II C
kategorija:	2 i 3
atmosfera:	G / D
zona:	1, 2 , 21, 22

Upotreba:
- za područja ugrožena eksplozijom
- izrada strojeva i aparata
- tehnologija mjernih i kontrolnih instrumenata
- instalacije u proizvodnim postrojenjima

Material:
- 1/5: Gland element: nickel-plated brass/blank
- 2: pressure ring: Polycarbonate
- 3: Sealing: Neoprene
- 4: O-ring: Nitrile

Note:
Also available with viton sealing
viton temperature: -20°C to 200°C
stainless steel on request

Temperature range:
-40°C to 100°C

Colour(s)/Designs:
- External thread: Metric
- for non armoured cable
- 1F: sealing of the exterior sheathing

Characteristics:

Certificate:	LCIE 05 ATEX 6146 X
Type of protection:	Ex d/e
Test standard:	EN 60079-0, EN 60079-1, EN 60079-7, EN 61241-0, EN 61241-1
Device group:	II C
Category:	2 and 3
Atmosphere:	G / D
Zone:	1, 2, 21, 22

Applications:
- for explosion endangered areas
- Machine- and apparatus construction
- Measuring and control engineering
- Plant installations

vanjski navoj External thread	br. No.	promjer brtve min. max. mm mm Sealing min. max. mm mm	ključ veličine (H1) mm Across Flats (H1) mm	ključ veličine (H2) mm Across Flats (H2) mm	duljina navoja (E) mm Thread length (E) mm	ukupna duljina (L) mm Complete length (L) mm	broj artikla niklano Art. no. nickel-plated	broj artikla mesing Art. no. blank	JP kom. PU pcs.
M 12 x 1,5	4	4,0 - 8,0	17,0	17,0	16,0	42,0	4111129	4111120	1
M 16 x 1,5	4	4,0 - 8,0	20,0	17,0	16,0	42,0	4111159	4111150	1
M 16 x 1,5	5	7,0 - 12,0	20,0	20,0	16,0	39,0	4111169	4111160	1
M 20 x 1,5	5	7,0 - 12,0	24,0	20,0	16,0	39,0	4111209	4111200	1
M 20 x 1,5	6	9,0 - 16,0	24,0	24,0	16,0	43,0	4111219	4111210	1
M 25 x 1,5	5	7,0 - 12,0	28,0	20,0	16,0	39,0	4111259	4111250	1
M 25 x 1,5	6	9,0 - 16,0	28,0	24,0	16,0	43,0	4111269	4111260	1
M 25 x 1,5	7	13,0 - 21,0	30,0	30,0	16,0	44,0	4111279	4111270	1
M 32 x 1,5	7	13,0 - 21,0	36,0	30,0	16,0	44,0	4111329	4111320	1
M 32 x 1,5	8	17,0 - 27,5	40,0	40,0	16,0	61,0	4111339	4111330	1
M 40 x 1,5	8	17,0 - 27,5	44,0	40,0	16,0	61,0	4111409	4111400	1
M 40 x 1,5	9	22,0 - 34,0	48,0	48,0	16,0	67,0	4111419	4111410	1
M 50 x 1,5	9	22,0 - 34,0	55,0	48,0	16,0	67,0	4111509	4111500	1
M 50 x 1,5	10	28,0 - 41,0	55,0	55,0	16,0	72,0	4111519	4111510	1
M 63 x 1,5	11	34,0 - 48,0	65,0	64,0	16,0	82,0	4111639	4111630	1
M 63 x 1,5	12	39,0 - 54,0	70,0	70,0	16,0	84,0	4111649	4111640	1
M 75 x 1,5	12	39,0 - 54,0	80,0	70,0	16,0	84,0	4111759	4111750	1
M 75 x 1,5	13	48,0 - 65,0	85,0	90,0	18,0	100,0	4111769	4111760	1
M 80 x 1,5	13	48,0 - 65,0	85,0	90,0	18,0	100,0	4111809	4111800	1
M 80 x 1,5	14	55,0 - 74,0	95,0	100,0	20,0	112,0	4111819	4111810	1
M 90 x 1,5	14	55,0 - 74,0	95,0	100,0	20,0	112,0	4111909	4111900	1
M 90 x 1,5	15	65,0 - 83,0	110,0	125,0	22,0	123,0	4111919	4111910	1
M 100 x 1,5	15	65,0 - 83,0	110,0	125,0	22,0	123,0	4111989	4111980	1
M 100 x 1,5	16	74,0 - 83,0	120,0	125,0	22,0	123,0	4111999	4111990	1

Kabelska uvodnica ATEX Ex e 1F

mesing niklani/mesing
PG-navoj

Cable gland ATEX Ex e 1F

nickel-plated brass/blank
PG-thread

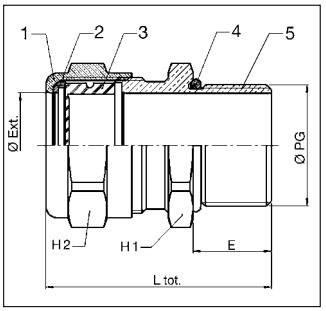

RoHS | Ex | IP 68 | IP 66 | PG

Materijal:
- 1/5: tijelo uvodnice: mesing niklani/mesing
- 2: pritisni prsten: polikarbonat
- 3: brtva: neopren
- 4: O-brtva: nitril

Napomena:
raspoloživa i sa Viton brtvom
temperatura za Viton: -20°C do 200°C
nehrđajući čelik na upit

Radna temperatura:
-40°C do 100°C

Boje/izvedbe:
- vanjski navoj: PG
- za neekranizirane kabele
- 1F: brtva vanjskog omotača

Svojstva:
certifikat: LCIE 05 ATEX 6146 X
tip zaštite: Ex e
testni standard: EN 60079-0, EN 60079-7, EN 61241-0, EN 61241-1
grupa uređaja: II C
kategorija: 2 i 3
atmosfera: G / D
zona: 1, 2 , 21, 22

Napomena:
PG navoj samo Ex e

Upotreba:
- za područja ugrožena eksplozijom
- izrada strojeva i aparata
- tehnologija mjernih i kontrolnih instrumenata
- instalacije u proizvodnim postrojenjima

Material:
- 1/5: Gland element: nickel-plated brass/blank
- 2: pressure ring: Polycarbonate
- 3: Sealing: Neoprene
- 4: O-ring: Nitrile

Note:
Also available with viton sealing
viton temperature: -20°C to 200°C
stainless steel on request

Temperature range:
-40°C to 100°C

Colour(s)/Designs:
- External thread: PG
- for non armoured cable
- 1F: sealing of the exterior sheathing

Characteristics:
Certificate: LCIE 05 ATEX 6146 X
Type of protection: Ex e
Test standard: EN 60079-0, EN 60079-7, EN 61241-0, EN 61241-1
Device group: II C
Category: 2 and 3
Atmosphere: G / D
Zone: 1, 2, 21, 22

Note:
PG thread just only Ex e

Applications:
- for explosion endangered areas
- Machine- and apparatus construction
- Measuring and control engineering
- Plant installations

vanjski navoj External thread	br. No.	promjer brtve min. max. mm mm Sealing min. max. mm mm	ključ veličine (H1) mm Across Flats (H1) mm	ključ veličine (H2) mm Across Flats (H2) mm	duljina navoja (E) mm Thread length (E) mm	ukupna duljina (L) mm Complete length (L) mm	broj artikla niklano Art. no. nickel-plated	broj artikla mesing Art. no. blank	JP kom. PU pcs.
PG 7	4	4,0 - 8,0	17,0	17,0	16,0	42,0	4121079	4121070	1
PG 9	5	7,0 - 12,0	20,0	20,0	16,0	39,0	4121099	4121090	1
PG 11	5	7,0 - 12,0	22,0	20,0	16,0	39,0	4121119	4121110	1
PG 13	5	7,0 - 12,0	24,0	20,0	16,0	39,0	4121139	4121130	1
PG 13	6	9,0 - 16,0	24,0	24,0	16,0	43,0	4121149	4121140	1
PG 16	6	9,0 - 16,0	26,0	24,0	16,0	43,0	4121169	4121160	1
PG 21	7	13,0 - 20,5	30,0	30,0	16,0	44,0	4121219	4121210	1
PG 29	8	17,0 - 27,0	40,0	40,0	16,0	61,0	4121299	4121290	1
PG 29	9	22,0 - 32,0	48,0	48,0	16,0	67,0	4121309	4121300	1
PG 36	9	22,0 - 34,0	50,0	48,0	16,0	67,0	4121369	4121360	1
PG 36	10	28,0 - 41,0	55,0	55,0	16,0	72,0	4121379	4121370	1
PG 42	11	34,0 - 47,0	64,0	64,0	16,0	82,0	4121429	4121420	1
PG 48	12	39,0 - 53,0	70,0	70,0	16,0	84,0	4121489	4121480	1
G 2 1/2“	13	48,0 - 65,0	85,0	90,0	18,0	100,0	4121509	4121500	1
G 3“	14	55,0 - 71,0	95,0	100,0	20,0	112,0	4121539	4121530	1
G 3“	15	65,0 - 77,0	110,0	125,0	22,0	123,0	4121549	4121540	1
G 3 1/2“	15	65,0 - 79,0	110,0	125,0	22,0	123,0	4121559	4121550	1
G 3 1/2“	16	74,0 - 89,0	120,0	125,0	22,0	123,0	4121569	4121560	1

Kabelska uvodnica ATEX Ex d/e 1F

mesing niklani/mesing
NPT-navoj

Cable gland ATEX Ex d/e 1F

nickel-plated brass/blank
NPT-thread

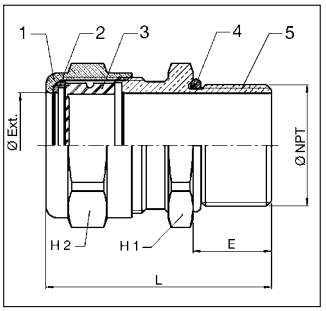

RoHS | Ex | IP 68 | IP 66 | PG

Materijal:
- 1/5: tijelo uvodnice: mesing niklani/mesing
- 2: pritisni prsten: polikarbonat
- 3: brtva: neopren
- 4: O-brtva: nitril

Napomena:
raspoloživa i sa Viton brtvom
temperatura za Viton: -20°C do 200°C
nehrđajući čelik na upit

Radna temperatura:
-40°C do 100°C

Boje/izvedbe:
- vanjski navoj: NPT
- za neekranizirane kabele
- 1F: brtva vanjskog omotača

Svojstva:
certifikat: LCIE 05 ATEX 6146 X
tip zaštite: Ex d/e
testni standard: EN 60079-0, EN 60079-1, EN 60079-7, EN 61241-0, EN 61241-1
grupa uređaja: II C
kategorija: 2 i 3
atmosfera: G / D
zona: 1, 2 , 21, 22

Upotreba:
- za područja ugrožena eksplozijom
- izrada strojeva i aparata
- tehnologija mjernih i kontrolnih instrumenata
- instalacije u proizvodnim postrojenjima

Material:
- 1/5: Gland element: nickel-plated brass/blank
- 2: pressure ring: Polycarbonate
- 3: Sealing: Neoprene
- 4: O-ring: Nitrile

Note:
Also available with viton sealing
viton temperature: -20°C to 200°C
stainless steel on request

Temperature range:
-40°C to 100°C

Colour(s)/Designs:
- External thread: NPT
- for non armoured cable
- 1F: sealing of the exterior sheathing

Characteristics:
Certificate: LCIE 05 ATEX 6146 X
Type of protection: Ex d/e
Test standard: EN 60079-0, EN 60079-1, EN 60079-7, EN 61241-0, EN 61241-1
Device group: II C
Category: 2 and 3
Atmosphere: G / D
Zone: 1, 2, 21, 22

Applications:
- for explosion endangered areas
- Machine- and apparatus construction
- Measuring and control engineering
- Plant installations

vanjski navoj External thread	br. No.	promjer brtve min. max. mm mm Sealing min. max. mm mm	ključ veličine (H1) mm Across Flats (H1) mm	ključ veličine (H2) mm Across Flats (H2) mm	duljina navoja (E) mm Thread length (E) mm	ukupna duljina (L) mm Complete length (L) mm	broj artikla niklano Art. no. nickel-plated	broj artikla mesing Art. no. blank	JP kom. PU pcs.
NPT 1/4“	4	4,0 - 8,0	17,0	17,0	16,0	42,0	4131029	4131020	1
NPT 3/8“	4	4,0 - 8,0	20,0	17,0	16,0	42,0	4131039	4131030	1
NPT 1/2“	4	4,0 - 8,0	24,0	17,0	20,0	46,0	4131049	4131040	1
NPT 3/8“	5	7,0 - 12,0	20,0	20,0	16,0	39,0	4131059	4131050	1
NPT 1/2“	5	7,0 - 12,0	24,0	20,0	20,0	43,0	4131109	4131100	1
NPT 1/2“	6	9,0 - 16,0	24,0	24,0	20,0	47,0	4131119	4131110	1
NPT 3/4“	5	7,0 - 12,0	28,0	20,0	16,0	43,0	4131209	4131200	1
NPT 3/4“	6	9,0 - 16,0	28,0	24,0	20,0	47,0	4131219	4131210	1
NPT 3/4“	7	13,0 - 20,5	30,0	30,0	20,0	48,0	4131229	4131220	1
NPT 1“	7	13,0 - 21,0	36,0	30,0	25,0	53,0	4131309	4131300	1
NPT 1“	8	17,0 - 27,0	40,0	40,0	25,0	70,0	4131319	4131310	1
NPT 1 1/4“	8	17,0 - 27,5	44,0	40,0	25,0	70,0	4131349	4131340	1
NPT 1 1/4“	9	22,0 - 34,0	48,0	48,0	25,0	76,0	4131359	4131350	1
NPT 1 1/2“	9	22,0 - 34,0	55,0	48,0	26,0	77,0	4131369	4131360	1
NPT 1 1/2“	10	28,0 - 41,0	55,0	55,0	26,0	82,0	4131379	4131370	1
NPT 2“	11	34,0 - 47,5	68,0	64,0	27,0	83,0	4131409	4131400	1
NPT 2“	12	39,0 - 53,5	70,0	70,0	27,0	95,0	4131419	4131410	1
NPT 2 1/2“	12	39,0 - 54,0	80,0	70,0	40,0	108,0	4131459	4131450	1
NPT 2 1/2“	13	48,0 - 64,5	85,0	90,0	40,0	122,0	4131469	4131460	1
NPT 3“	14	55,0 - 71,0	95,0	100,0	42,0	134,0	4131509	4131500	1
NPT 3“	15	65,0 - 79,0	110,0	125,0	42,0	143,0	4131519	4131510	1
NPT 3 1/2“	15	65,0 - 79,0	110,0	125,0	43,0	144,0	4131559	4131550	1
NPT 3 1/2“	16	74,0 - 89,0	120,0	125,0	43,0	144,0	4131569	4131560	1

Kabelska uvodnica ATEX Ex d/e 3F

mesing niklani/mesing
metrički navoj

Cable gland ATEX Ex d/e 3F

nickel-plated brass/blank
metric thread

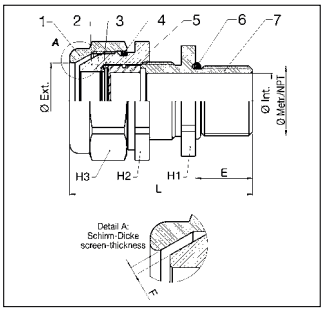

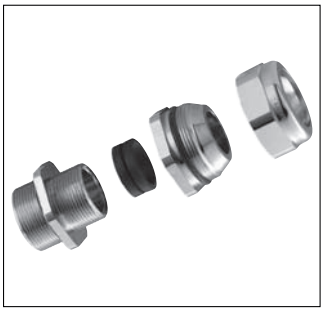

RoHS | Ex | IP 68 | IP 66 | PG | EN 50262

Materijal:
- 1/2/7: tijelo uvodnice:
  mesing niklani/mesing
- 3: pritisni prsten: polikarbonat
- 4/6: O-brtva: nitril
- 5: brtva: neopren

Napomena:
raspoloživa i sa Viton brtvom
temperatura za Viton: -20°C do 200°C
nehrđajući čelik na upit

Radna temperatura:
-40°C do 100°C

Boje/izvedbe:
- vanjski navoj: metrički
- za ekranizirane kablove
- 3F: brtva unutarnjeg kabelskog omotača
  uzemljenje omotača
  sa zaštitom od izvlačenja omotača

Svojstva:
certifikat: LCIE 05 ATEX 6146 X
tip zaštite: Ex d/e
testni standard: EN 60079-0, EN 60079-1, EN 60079-7, EN 61241-0, EN 61241-1
grupa uređaja: II C
kategorija: 2 i 3
atmosfera: G / D
zona: 1, 2 , 21, 22

Upotreba:
- za područja ugrožena eksplozijom
- izrada strojeva i aparata
- tehnologija mjernih i kontrolnih instrumenata
- instalacije u proizvodnim postrojenjima

Material:
- 1/2/7: Gland element:
  nickel-plated brass/blank
- 3: pressure ring: Polycarbonate
- 4/6: O-ring: Nitrile
- 5: Sealing: Neoprene

Note:
Also available with viton sealing
viton temperature: -20 to 200°C
stainless steel on request

Temperature range:
-40°C to 100°C

Colour(s)/Designs:
- External thread: Metric
- for screened (armoured) cables
- 3F: Sealing of the inner cable sheath
  Grounding of the sheathing
  Strain relief of the sheathing

Characteristics:
Certificate: LCIE 05 ATEX 6146 X
Type of protection: Ex d/e
Test standard: EN 60079-0, EN 60079-1, EN 60079-7, EN 61241-0, EN 61241-1
Device group: II C
Category: 2 and 3
Atmosphere: G / D
Zone: 1, 2, 21, 22

Applications:
- for explosion endangered areas
- Machine- and apparatus construction
- Measuring and control engineering
- Plant installations

3.4

vanjski navoj External thread	br. No.	vanjski omotač min. max. mm mm exterior sheath min. max. mm mm	F max. mm F max. mm	promjer brtve unutarnjeg omotača min. max. mm mm Sealing inner sheath min. max. mm mm	ključ veličine (H1) mm Across Flats (H1) mm	ključ veličine (H2) mm Across Flats (H2) mm	ključ veličine (H3) mm Across Flats (H3) mm	E mm E mm	L mm L mm	broj artikla niklano Art. no. nickel-plated	broj artikla mesing Art. no. blank	JP kom. PU pcs.
M 12 x 1,5	5	7,0 - 12,0	1,0	4,0 - 7,0	18,0	20,0	20,0	16,0	47,0	4113129	4113120	1
M 16 x 1,5	5	7,0 - 12,0	1,0	4,0 - 8,0	20,0	20,0	20,0	16,0	47,0	4113169	4113160	1
M 16 x 1,5	6	9,0 - 16,0	1,3	6,0 - 12,0	18,0	24,0	24,0	16,0	51,0	4113179	4113170	1
M 20 x 1,5	5	7,0 - 12,0	1,0	4,0 - 8,0	24,0	20,0	20,0	16,0	47,0	4113209	4113200	1
M 20 x 1,5	6	9,0 - 16,0	1,3	6,0 - 12,0	24,0	24,0	24,0	16,0	51,0	4113219	4113210	1
M 20 x 1,5	7	13,0 - 21,0	1,3	8,5 - 15,0	28,0	30,0	30,0	16,0	51,0	4113229	4113220	1
M 25 x 1,5	6	9,0 - 16,0	1,3	6,0 - 12,0	28,0	24,0	24,0	16,0	51,0	4113259	4113250	1
M 25 x 1,5	7	13,0 - 21,0	1,3	8,5 - 15,5	30,0	30,0	30,0	16,0	51,0	4113269	4113260	1
M 25 x 1,5	8	17,0 - 27,5	1,6	12,0 - 19,5	36,0	40,0	40,0	16,0	60,0	4113279	4113270	1
M 32 x 1,5	8	17,0 - 27,5	1,6	12,0 - 20,5	40,0	40,0	40,0	16,0	60,0	4113329	4113320	1
M 32 x 1,5	9	22,0 - 34,0	2,0	16,0 - 25,5	44,0	48,0	48,0	16,0	66,0	4113339	4113330	1
M 40 x 1,5	9	22,0 - 34,0	2,0	16,0 - 27,5	48,0	48,0	48,0	16,0	66,0	4113409	4113400	1
M 40 x 1,5	10	28,0 - 41,0	2,0	21,0 - 33,0	50,0	55,0	55,0	16,0	68,0	4113419	4113410	1
M 50 x 1,5	10	28,0 - 41,0	2,0	21,0 - 34,0	55,0	55,0	55,0	16,0	68,0	4113509	4113500	1
M 50 x 1,5	11	34,0 - 48,0	2,5	27,0 - 41,0	64,0	64,0	64,0	16,0	73,0	4113519	4113510	1
M 63 x 1,5	12	39,0 - 54,0	2,5	33,0 - 46,0	70,0	70,0	70,0	16,0	75,0	4113639	4113630	1
M 63 x 1,5	13	48,0 - 65,0	2,5	40,0 - 54,0	80,0	85,0	85,0	16,0	86,0	4113649	4113640	1
M 75 x 1,5	13	48,0 - 65,0	2,5	40,0 - 54,0	85,0	85,0	85,0	18,0	86,0	4113759	4113750	1
M 75 x 1,5	14	55,0 - 74,0	2,5	47,0 - 65,0	90,0	95,0	95,0	18,0	95,0	4113769	4113760	1
M 80 x 1,5	14	55,0 - 74,0	2,5	47,0 - 65,0	95,0	95,0	95,0	20,0	95,0	4113809	4113800	1
M 80 x 2,0	15	65,0 - 83,0	3,15	54,0 - 71,0	100,0	110,0	110,0	20,0	107,0	4113819	4113810	1
M 90 x 2,0	15	65,0 - 83,0	3,15	54,0 - 74,0	110,0	110,0	110,0	22,0	107,0	4113909	4113900	1
M 90 x 2,0	16	74,0 - 93,0	3,15	63,0 - 79,0	110,0	120,0	120,0	22,0	107,0	4113919	4113910	1
M 100 x 2,0	16	74,0 - 93,0	3,15	63,0 - 82,0	120,0	120,0	120,0	22,0	107,0	4113999	4113990	1

Kabelska uvodnica ATEX Ex e 3F

mesing niklani/mesing
PG-navoj

Cable gland ATEX Ex e 3F

nickel-plated brass/blank
PG-thread

RoHS | Ex | IP 68 | IP 66 | PG

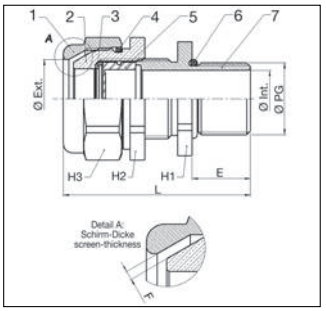

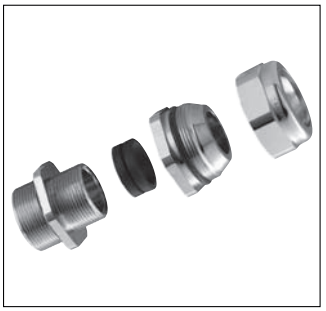

Materijal:
- 1/2/7: tijelo uvodnice: mesing niklani/mesing
- 3: pritisni prsten: polikarbonat
- 4/6: O-brtva: nitril
- 5: brtva: neopren

Napomena:
raspoloživa i sa Viton brtvom
temperatura za Viton: -20°C do 200°C
nehrđajući čelik na upit

Radna temperatura:
-40°C do 100°C

Boje/izvedbe:
- vanjski navoj: PG
- za ekranizirane kablove
- 3F: brtva unutarnjeg kabelskog omotača
  uzemljenje omotača
  sa zaštitom od izvlačenja omotača

Svojstva:
certifikat: LCIE 05 ATEX 6146 X
tip zaštite: Ex e
testni standard: EN 60079-0, EN 60079-7, EN 61241-0, EN 61241-1
grupa uređaja: II C
kategorija: 2 i 3
atmosfera: G / D
zona: 1, 2 , 21, 22

Napomena:
PG navoj samo Ex e

Upotreba:
- za područja ugrožena eksplozijom
- izrada strojeva i aparata
- tehnologija mjernih i kontrolnih instrumenata
- instalacije u proizvodnim postrojenjima

Material:
- 1/2/7: Gland element: nickel-plated brass/blank
- 3: pressure ring: Polycarbonate
- 4/6: O-ring: Nitrile
- 5: Sealing: Neoprene

Note:
Also available with viton sealing
viton temperature: -20 to 200°C
stainless steel on request

Temperature range:
-40°C to 100°C

Colour(s)/Designs:
- External thread: PG
- for screened (armoured) cables
- 3F: Sealing of the inner cable sheath
  Grounding of the sheathing
  Strain relief of the sheathing

Characteristics:
Certificate: LCIE 05 ATEX 6146 X
Type of protection: Ex e
Test standard: EN 60079-0, EN 60079-7, EN 61241-0, EN 61241-1
Device group: II C
Category: 2 and 3
Atmosphere: G / D
Zone: 1, 2, 21, 22

Note:
PG thread just only Ex e

Applications:
- for explosion endangered areas
- Machine- and apparatus construction
- Measuring and control engineering
- Plant installations

vanjski navoj External thread	br. No.	vanjski omotač min. max. mm mm exterior sheath min. max. mm mm	F max. mm F max. mm	promjer brtve unutarnjeg omotača min. max. mm mm Sealing inner sheath min. max. mm mm	ključ veličine (H1) mm Across Flats (H1) mm	ključ veličine (H2) mm Across Flats (H2) mm	ključ veličine (H3) mm Across Flats (H3) mm	E mm E mm	L mm L mm	broj artikla niklano Art. no. nickel-plated	broj artikla mesing Art. no. blank	JP kom. PU pcs.
PG 7	5	7,0 - 12,0	1,0	4,0 - 6,5	18,0	20,0	20,0	16,0	47,0	4123079	4123070	1
PG 9	5	7,0 - 12,0	1,0	4,0 - 8,0	20,0	20,0	20,0	16,0	47,0	4123099	4123090	1
PG 9	6	9,0 - 16,0	1,3	6,0 - 11,5	22,0	24,0	24,0	16,0	51,0	4123109	4123100	1
PG 11	5	7,0 - 12,0	1,0	4,0 - 8,0	22,0	20,0	20,0	16,0	47,0	4123119	4123110	1
PG 11	6	9,0 - 16,0	1,3	6,0 - 12,0	22,0	24,0	24,0	16,0	51,0	4123129	4123120	1
PG 13	6	9,0 - 16,0	1,3	6,0 - 12,0	24,0	24,0	24,0	16,0	51,0	4123139	4123130	1
PG 13	7	13,0 - 21,0	1,3	8,5 - 15,0	24,0	30,0	30,0	16,0	51,0	4123149	4123140	1
PG 16	7	13,0 - 21,0	1,3	8,5 - 15,5	27,0	30,0	30,0	16,0	51,0	4123169	4123160	1
PG 16	8	17,0 - 27,5	1,6	12,0 - 17,5	30,0	40,0	40,0	16,0	60,0	4123179	4123170	1
PG 21	8	17,0 - 27,5	1,6	12,0 - 20,5	34,0	40,0	40,0	16,0	60,0	4123219	4123210	1
PG 29	9	22,0 - 34,0	2,0	16,0 - 25,5	44,0	48,0	48,0	16,0	66,0	4123299	4123290	1
PG 29	10	28,0 - 41,0	2,0	21,0 - 32,0	50,0	55,0	55,0	16,0	68,0	4123309	4123300	1
PG 36	10	28,0 - 41,0	2,0	21,0 - 34,0	55,0	55,0	55,0	16,0	68,0	4123369	4123360	1
PG 36	11	34,0 - 48,0	2,5	27,0 - 41,0	55,0	64,0	64,0	16,0	73,0	4123379	4123370	1
PG 42	12	39,0 - 54,0	2,5	33,0 - 46,0	64,0	70,0	70,0	16,0	75,0	4123429	4123420	1
PG 48	13	48,0 - 65,0	2,5	40,0 - 53,5	70,0	85,0	85,0	16,0	86,0	4123489	4123480	1
G 2 1/2"	14	55,0 - 74,0	2,5	47,0 - 65,0	90,0	95,0	95,0	20,0	95,0	4123519	4123510	1
G 3"	15	65,0 - 83,0	3,2	54,0 - 71,0	100,0	110,0	110,0	20,0	107,0	4123539	4123530	1
G 3"	16	74,0 - 93,0	3,2	63,0 - 79,0	110,0	120,0	120,0	22,0	107,0	4123549	4123540	1

Kabelska uvodnica ATEX Ex d/e 3F

mesing niklani/mesing
NPT-navoj

Cable gland ATEX Ex d/e 3F

nickel-plated brass/blank
NPT-thread

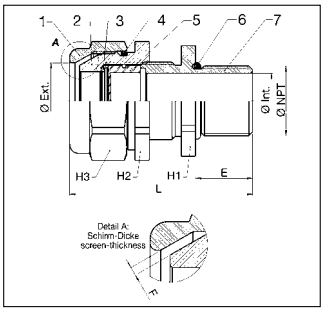

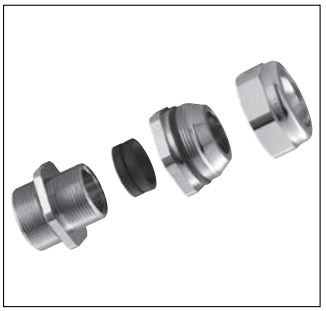

RoHS | Ex | IP 68 | IP 66 | PG

Materijal:
- 1/2/7: tijelo uvodnice: mesing niklani/mesing
- 3: pritisni prsten: polikarbonat
- 4/6: O-brtva: nitril
- 5: brtva: neopren

Napomena:
raspoloživa i sa Viton brtvom
temperatura za Viton: -20°C do 200°C
nehrđajući čelik na upit

Radna temperatura:
-40°C do 100°C

Boje/izvedbe:
- vanjski navoj: NPT
- za ekranizirane kablove
- 3F: brtva unutarnjeg kabelskog omotača
  uzemljenje omotača
  sa zaštitom od izvlačenja omotača

Svojstva:
certifikat: LCIE 05 ATEX 6146 X
tip zaštite: Ex d/e
testni standard: EN 60079-0, EN 60079-1, EN 60079-7, EN 61241-0, EN 61241-1
grupa uređaja: II C
kategorija: 2 i 3
atmosfera: G / D
zona: 1, 2 , 21, 22

Upotreba:
- za područja ugrožena eksplozijom
- izrada strojeva i aparata
- tehnologija mjernih i kontrolnih instrumenata
- instalacije u proizvodnim postrojenjima

Material:
- 1/2/7: Gland element: nickel-plated brass/blank
- 3: pressure ring: Polycarbonate
- 4/6: O-ring: Nitrile
- 5: Sealing: Neoprene

Note:
Also available with viton sealing
viton temperature: -20 to 200°C
stainless steel on request

Temperature range:
-40°C to 100°C

Colour(s)/Designs:
- External thread: NPT
- for screened (armoured) cables
- 3F: Sealing of the inner cable sheath
  Grounding of the sheathing
  Strain relief of the sheathing

Characteristics:
Certificate: LCIE 05 ATEX 6146 X
Type of protection: Ex d/e
Test standard: EN 60079-0, EN 60079-1, EN 60079-7, EN 61241-0, EN 61241-1
Device group: II C
Category: 2 and 3
Atmosphere: G / D
Zone: 1, 2, 21, 22

Applications:
- for explosion endangered areas
- Machine- and apparatus construction
- Measuring and control engineering
- Plant installations

3.4

vanjski navoj External thread	br. No.	vanjski omotač min. max. mm mm exterior sheath min. max. mm mm	F max. mm F max. mm	promjer brtve unutarnjeg omotača min. max. mm mm Sealing inner sheath min. max. mm mm	ključ veličine (H1) mm Across Flats (H1) mm	ključ veličine (H2) mm Across Flats (H2) mm	ključ veličine (H3) mm Across Flats (H3) mm	E mm E mm	L mm L mm	broj artikla niklano Art. no. nickel-plated	broj artikla mesing Art. no. blank	JP kom. PU pcs.
NPT 1/4“	5	7,0 - 12,0	1,0	4,0 - 7,0	18,0	20,0	20,0	16,0	47,0	4133019	4133010	1
NPT 3/8“	5	7,0 - 12,0	1,0	4,0 - 8,0	20,0	20,0	20,0	16,0	47,0	4133059	4133050	1
NPT 3/8“	6	9,0 - 16,0	1,3	6,0 - 12,0	22,0	24,0	24,0	16,0	51,0	4133069	4133060	1
NPT 1/2“	5	7,0 - 12,0	1,0	4,0 - 8,0	24,0	20,0	20,0	20,0	51,0	4133109	4133100	1
NPT 1/2“	6	9,0 - 16,0	1,3	6,0 - 12,0	24,0	24,0	24,0	20,0	55,0	4133119	4133110	1
NPT 1/2“	7	13,0 - 21,0	1,3	8,5 - 15,0	24,0	30,0	30,0	20,0	55,0	4133129	4133120	1
NPT 3/4“	6	9,0 - 16,0	1,3	6,0 - 12,0	28,0	24,0	24,0	20,0	55,0	4133209	4133200	1
NPT 3/4“	7	13,0 - 21,0	1,3	8,5 - 15,5	30,0	30,0	30,0	20,0	55,0	4133219	4133210	1
NPT 3/4“	8	17,0 - 27,5	1,6	12,0 - 19,5	30,0	40,0	40,0	20,0	64,0	4133229	4133220	1
NPT 1“	8	17,0 - 27,5	1,6	12,0 - 20,5	36,0	40,0	40,0	25,0	64,0	4133309	4133300	1
NPT 1“	9	22,0 - 34,0	2,0	16,0 - 25,5	40,0	48,0	48,0	25,0	75,0	4133319	4133310	1
NPT 1 1/4“	9	22,0 - 34,0	2,0	16,0 - 27,5	44,0	48,0	48,0	25,0	75,0	4133349	4133340	1
NPT 1 1/4“	10	28,0 - 41,0	2,0	21,0 - 33,0	50,0	55,0	55,0	25,0	77,0	4133359	4133350	1
NPT 1 1/2“	10	28,0 - 41,0	2,0	21,0 - 34,0	55,0	55,0	55,0	26,0	77,0	4133369	4133360	1
NPT 1 1/2“	11	34,0 - 48,0	2,5	27,0 - 41,0	55,0	64,0	64,0	26,0	83,0	4133379	4133370	1
NPT 2“	12	39,0 - 54,0	2,5	33,0 - 46,0	65,0	70,0	70,0	27,0	86,0	4133409	4133400	1
NPT 2“	13	48,0 - 65,0	2,5	40,0 - 53,5	70,0	85,0	85,0	27,0	97,0	4133419	4133410	1
NPT 2 1/2“	13	48,0 - 65,0	2,5	40,0 - 54,0	80,0	85,0	85,0	40,0	108,0	4133459	4133450	1
NPT 2 1/2“	14	55,0 - 74,0	2,5	47,0 - 64,5	85,0	95,0	95,0	40,0	117,0	4133469	4133460	1
NPT 3“	15	65,0 - 83,0	3,2	54,0 - 71,0	100,0	110,0	110,0	42,0	129,0	4133509	4133500	1
NPT 3“	16	74,0 - 93,0	3,2	63,0 - 79,0	110,0	120,0	120,0	42,0	127,0	4133519	4133510	1

Kabelska uvodnica ATEX Ex d/e 4F

mesing niklani/mesing
metrički navoj

Cable gland ATEX Ex d/e 4F

nickel-plated brass/blank
metric thread

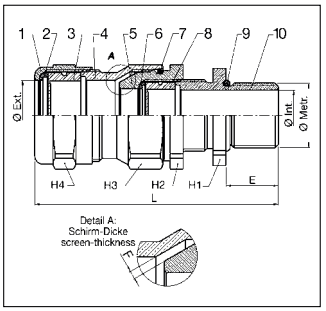

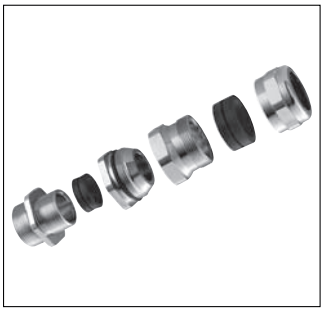

RoHS | Ex | IP 68 | IP 66 | PG | EN 50262

Materijal:
- 1/4/5/10: tijelo uvodnice: mesing niklani/mesing
- 2/6: pritisni prsten: polikarbonat
- 7/9: O-brtva: nitril
- 3/8: brtva: neopren

Napomena:
raspoloživa i sa Viton brtvom
temperatura za Viton: -20 do 200°C
nehrđajući čelik na upit

Radna temperatura:
-40°C do 100°C

Boje/izvedbe:
- vanjski navoj: metrički
- za ekranizirane kablove
- 4F: brtva unutarnjeg kabelskog omotača
  uzemljenje omotača
  sa zaštitom od izvlačenja omotača
  brtva vanjskog omotača

Svojstva:
certifikat: LCIE 05 ATEX 6146 X
tip zaštite: Ex d/e
testni standard: EN 60079-0, EN 60079-1, EN 60079-7, EN 61241-0, EN 61241-1
grupa uređaja: II C
kategorija: 2 i 3
atmosfera: G / D
zona: 1, 2 , 21, 22

Upotreba:
- za područja ugrožena eksplozijom
- izrada strojeva i aparata
- tehnologija mjernih i kontrolnih instrumenata
- instalacije u proizvodnim postrojenjima

Material:
- 1/4/5/10: Gland element: nickel-plated brass/blank
- 2/6: pressure ring: Polycarbonate
- 7/9: O-ring: Nitrile
- 3/8: Sealing: Neoprene

Note:
Also available with viton sealing
viton temperature: -20 to 200°C
stainless steel on request

Temperature range:
-40°C to 100°C

Colour(s)/Designs:
- External thread: Metric
- for screened (armoured) cables
- 4F: Sealing of the inner cable sheath
  Grounding of the sheathing
  Strain relief of the sheathing
  Sealing of the exterior sheathing

Characteristics:
Certificate: LCIE 05 ATEX 6146 X
Type of protection: Ex d/e
Test standard: EN 60079-0, EN 60079-1, EN 60079-7, EN 61241-0, EN 61241-1
Device group: II C
Category: 2 and 3
Atmosphere: G / D
Zone: 1, 2, 21, 22

Applications:
- for explosion endangered areas
- Machine- and apparatus construction
- Measuring and control engineering
- Plant installations

vanjski navoj External thread	br. No.	promjer brtve vanjskog omotača min. max. mm mm Sealing exterior sheath min. max. mm mm	F max. mm F max. mm	promjer brtve unutarnjeg omotača min. max. mm mm Sealing inner sheath min. max. mm mm	ključ veličine (H1) mm Across Flats (H1) mm	ključ veličine (H2) mm Across Flats (H2) mm	ključ veličine (H3) mm Across Flats (H3) mm	ključ veličine (H4) mm Across Flats (H4) mm	E mm E mm	L mm L mm	broj artikla niklano Art. no. nickel-plated	broj artikla mesing Art. no. blank	JP kom. PU pcs.
M 12 x 1,5	5	7,0 - 12,0	1,0	4,0 - 7,0	18,0	20,0	20,0	20,0	16,0	67,0	4114129	4114120	1
M 16 x 1,5	5	7,0 - 12,0	1,0	4,0 - 8,0	20,0	20,0	20,0	20,0	16,0	67,0	4114169	4114160	1
M 16 x 1,5	6	9,0 - 16,0	1,3	6,0 - 12,0	18,0	24,0	24,0	24,0	16,0	71,0	4114179	4114170	1
M 20 x 1,5	5	7,0 - 12,0	1,0	4,0 - 8,0	24,0	20,0	20,0	20,0	16,0	67,0	4114209	4114200	1
M 20 x 1,5	6	9,0 - 16,0	1,3	6,0 - 12,0	24,0	24,0	24,0	24,0	16,0	71,0	4114219	4114210	1
M 20 x 1,5	7	13,0 - 21,0	1,3	8,5 - 15,0	28,0	30,0	30,0	30,0	16,0	72,0	4114229	4114220	1
M 25 x 1,5	6	9,0 - 16,0	1,3	6,0 - 12,0	28,0	24,0	24,0	24,0	16,0	71,0	4114259	4114250	1
M 25 x 1,5	7	13,0 - 21,0	1,3	8,5 - 15,5	30,0	30,0	30,0	30,0	16,0	72,0	4114269	4114260	1
M 25 x 1,5	8	17,0 - 27,5	1,6	12,0 - 19,5	36,0	40,0	40,0	40,0	16,0	89,0	4114279	4114270	1
M 32 x 1,5	8	17,0 - 27,5	1,6	12,0 - 20,5	40,0	40,0	40,0	40,0	16,0	89,0	4114329	4114320	1
M 32 x 1,5	9	22,0 - 34,0	2,0	16,0 - 25,5	44,0	48,0	48,0	48,0	16,0	95,0	4114339	4114330	1
M 40 x 1,5	9	22,0 - 34,0	2,0	16,0 - 27,5	48,0	48,0	48,0	48,0	16,0	95,0	4114409	4114400	1
M 40 x 1,5	10	28,0 - 41,0	2,0	21,0 - 33,0	50,0	55,0	55,0	55,0	16,0	100,0	4114419	4114410	1
M 50 x 1,5	10	28,0 - 41,0	2,0	21,0 - 34,0	55,0	55,0	55,0	55,0	16,0	100,0	4114509	4114500	1
M 50 x 1,5	11	34,0 - 48,0	2,5	27,0 - 41,0	64,0	64,0	64,0	64,0	16,0	110,0	4114519	4114510	1
M 63 x 1,5	12	39,0 - 54,0	2,5	33,0 - 46,0	70,0	70,0	70,0	70,0	16,0	112,0	4114639	4114630	1
M 63 x 1,5	13	48,0 - 65,0	2,5	40,0 - 54,0	80,0	85,0	85,0	90,0	16,0	128,0	4114649	4114640	1
M 75 x 1,5	13	48,0 - 65,0	2,5	40,0 - 54,0	85,0	85,0	85,0	90,0	18,0	128,0	4114759	4114750	1
M 75 x 1,5	14	55,0 - 74,0	2,5	47,0 - 65,0	90,0	95,0	95,0	100,0	18,0	140,0	4114769	4114760	1
M 80 x 2,0	14	55,0 - 74,0	2,5	47,0 - 65,0	95,0	95,0	95,0	100,0	20,0	140,0	4114809	4114800	1
M 80 x 2,0	15	65,0 - 83,0	3,2	54,0 - 71,0	100,0	110,0	110,0	125,0	20,0	151,0	4114819	4114810	1
M 90 x 2,0	15	65,0 - 83,0	3,2	54,0 - 74,0	110,0	110,0	110,0	125,0	22,0	151,0	4114909	4114900	1
M 90 x 2,0	16	74,0 - 93,0	3,2	63,0 - 79,0	110,0	120,0	120,0	125,0	22,0	151,0	4114919	4114910	1
M 100 x 2,0	16	74,0 - 93,0	3,2	63,0 - 82,0	120,0	120,0	120,0	125,0	22,0	151,0	4114999	4114990	1

Kabelska uvodnica ATEX Ex e 4F

mesing niklani/mesing
PG-navoj

Cable gland ATEX Ex e 4F

nickel-plated brass/blank
PG-thread

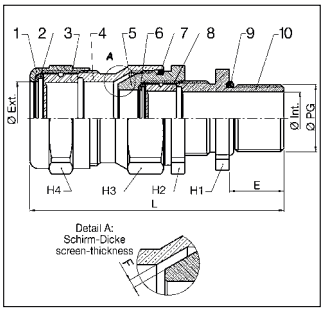

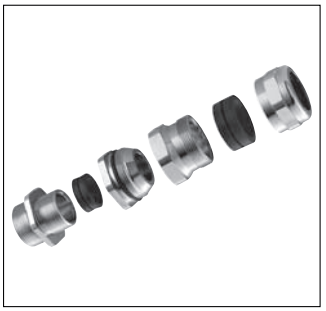

RoHS | Ex | IP 68 | IP 66 | PG

Materijal:
- 1/4/5/10: tijelo uvodnice: mesing niklani/mesing
- 2/6: pritisni prsten: polikarbonat
- 7/9: O-brtva: nitril
- 3/8: brtva: neopren

Napomena:
raspoloživa i sa Viton brtvom
temperatura za Viton: -20 do 200°C
nehrđajući čelik na upit

Radna temperatura:
-40°C do 100°C

Boje/izvedbe:
- vanjski navoj: PG
- za ekranizirane kablove
- 4F: brtva unutarnjeg kabelskog omotača
  uzemljenje omotača
  sa zaštitom od izvlačenja omotača
  brtva vanjskog omotača

Svojstva:
certifikat: LCIE 05 ATEX 6146 X
tip zaštite: Ex e
testni standard: EN 60079-0, EN 60079-7, EN 61241-0, EN 61241-1
grupa uređaja: II C
kategorija: 2 i 3
atmosfera: G / D
zona: 1, 2 , 21, 22

Napomena:
PG-navoj samo Ex e

Upotreba:
- za područja ugrožena eksplozijom
- izrada strojeva i aparata
- tehnologija mjernih i kontrolnih instrumenata
- instalacije u proizvodnim postrojenjima

Material:
- 1/4/5/10: Gland element: nickel-plated brass/blank
- 2/6: pressure ring: Polycarbonate
- 7/9: O-ring: Nitrile
- 3/8: Sealing: Neoprene

Note:
Also available with viton sealing
viton temperature: -20 to 200°C
stainless steel on request

Temperature range:
-40°C to 100°C

Colour(s)/Designs:
- External thread: PG
- for screened (armoured) cables
- 4F: Sealing of the inner cable sheath
  Grounding of the sheathing
  Strain relief of the sheathing
  Sealing of the exterior sheathing

Characteristics:
Certificate: LCIE 05 ATEX 6146 X
Type of protection: Ex e
Test standard: EN 60079-0, EN 60079-7, EN 61241-0, EN 61241-1
Device group: II C
Category: 2 and 3
Atmosphere: G / D
Zone: 1, 2, 21, 22

Note:
PG-thread just only Ex e

Applications:
- for explosion endangered areas
- Machine- and apparatus construction
- Measuring and control engineering
- Plant installations

3.4

vanjski navoj External thread	br. No.	promjer brtve vanjskog omotača min. max. mm mm Sealing exterior sheath min. max. mm mm	F max. mm F max. mm	promjer brtve unutarnjeg omotača min. max. mm mm Sealing inner sheath min. max. mm mm	ključ veličine (H1) mm Across Flats (H1) mm	ključ veličine (H2) mm Across Flats (H2) mm	ključ veličine (H3) mm Across Flats (H3) mm	ključ veličine (H4) mm Across Flats (H4) mm	E mm E mm	L mm L mm	broj artikla niklano Art. no. nickel-plated	broj artikla mesing Art. no. blank	JP kom. PU pcs.
PG 9	5	7,0 - 12,0	1,0	4,0 - 8,0	20,0	20,0	20,0	20,0	16,0	67,0	4124099	4124090	1
PG 9	6	9,0 - 16,0	1,3	6,0 - 11,5	22,0	24,0	24,0	24,0	16,0	71,0	4124109	4124100	1
PG 11	5	7,0 - 12,0	1,0	4,0 - 8,0	22,0	20,0	20,0	20,0	16,0	67,0	4124119	4124110	1
PG 11	6	9,0 - 16,0	1,3	6,0 - 12,0	22,0	24,0	24,0	24,0	16,0	71,0	4124129	4124120	1
PG 13	6	9,0 - 16,0	1,3	6,0 - 12,0	24,0	24,0	24,0	24,0	16,0	71,0	4124139	4124130	1
PG 13	7	13,0 - 21,0	1,3	8,5 - 15,0	24,0	30,0	30,0	30,0	16,0	72,0	4124149	4124140	1
PG 16	7	13,0 - 21,0	1,3	8,5 - 15,5	27,0	30,0	30,0	30,0	16,0	72,0	4124169	4124160	1
PG 16	8	17,0 - 27,5	1,6	12,0 - 17,5	30,0	40,0	40,0	40,0	16,0	89,0	4124179	4124170	1
PG 21	8	17,0 - 27,5	1,6	12,0 - 20,5	34,0	40,0	40,0	40,0	16,0	89,0	4124219	4124210	1
PG 29	9	22,0 - 34,0	2,0	16,0 - 25,5	44,0	48,0	48,0	48,0	16,0	95,0	4124299	4124290	1
PG 29	10	28,0 - 41,0	2,0	21,0 - 32,0	50,0	55,0	55,0	55,0	16,0	100,0	4124309	4124300	1
PG 36	10	28,0 - 41,0	2,0	21,0 - 34,0	55,0	55,0	55,0	55,0	16,0	100,0	4124369	4124360	1
PG 36	11	34,0 - 48,0	2,5	27,0 - 41,0	55,0	64,0	64,0	64,0	16,0	110,0	4124379	4124370	1
PG 42	12	39,0 - 54,0	2,5	33,0 - 46,0	64,0	70,0	70,0	70,0	16,0	112,0	4124429	4124420	1
PG 48	13	48,0 - 65,0	2,5	40,0 - 53,5	70,0	85,0	85,0	90,0	16,0	128,0	4124489	4124480	1
G 2 1/2"	13	48,0 - 65,0	2,5	40,0 - 54,0	85,0	85,0	85,0	90,0	16,0	128,0	4124509	4124500	1
G 2 1/2"	14	55,0 - 74,0	2,5	47,0 - 65,0	90,0	95,0	95,0	100,0	20,0	140,0	4124519	4124510	1
G 3"	15	65,0 - 83,0	3,2	54,0 - 71,0	100,0	110,0	110,0	125,0	20,0	151,0	4124539	4124530	1
G 3"	16	74,0 - 93,0	3,2	63,0 - 79,0	110,0	120,0	120,0	125,0	22,0	151,0	4124549	4124540	1

Kabelska uvodnica ATEX Ex d/e 4F

mesing niklani/mesing
NPT-navoj

Cable gland ATEX Ex d/e 4F

nickel-plated brass/blank
NPT-thread

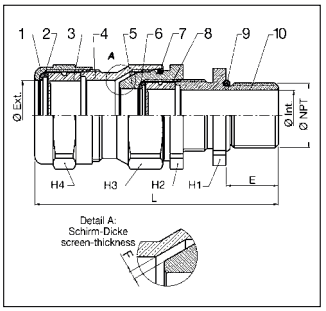

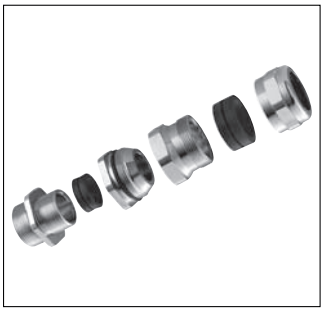

RoHS | Ex | IP 68 | IP 66 | PG

Materijal:
- 1/4/5/10: tijelo uvodnice: mesing niklani/mesing
- 2/6: pritisni prsten: polikarbonat
- 7/9: O-brtva: nitril
- 3/8: brtva: neopren

Napomena:
raspoloživa i sa Viton brtvom
temperatura za Viton: -20 do 200°C
nehrđajući čelik na upit

Radna temperatura:
-40°C do 100°C

Boje/izvedbe:
- vanjski navoj: NPT
- za ekranizirane kablove
- 4F: brtva unutarnjeg kabelskog omotača
  uzemljenje omotača
  sa zaštitom od izvlačenja omotača
  brtva vanjskog omotača

Svojstva:

certifikat:	LCIE 05 ATEX 6146 X
tip zaštite:	Ex d/e
testni standard:	EN 60079-0, EN 60079-1, EN 60079-7, EN 61241-0, EN 61241-1
grupa uređaja:	II C
kategorija:	2 i 3
atmosfera:	G / D
zona:	1, 2 , 21, 22

Upotreba:
- za područja ugrožena eksplozijom
- izrada strojeva i aparata
- tehnologija mjernih i kontrolnih instrumenata
- instalacije u proizvodnim postrojenjima

Material:
- 1/4/5/10: Gland element: nickel-plated brass/blank
- 2/6: pressure ring: Polycarbonate
- 7/9: O-ring: Nitrile
- 3/8: Sealing: Neoprene

Note:
Also available with viton sealing
viton temperature: -20 to 200°C
stainless steel on request

Temperature range:
-40°C to 100°C

Colour(s)/Designs:
- External thread: NPT
- for screened (armoured) cables
- 4F: Sealing of the inner cable sheath
  Grounding of the sheathing
  Strain relief of the sheathing
  Sealing of the exterior sheathing

Characteristics:

Certificate:	LCIE 05 ATEX 6146 X
Type of protection:	Ex d/e
Test standard:	EN 60079-0, EN 60079-1, EN 60079-7, EN 61241-0, EN 61241-1
Device group:	II C
Category:	2 and 3
Atmosphere:	G / D
Zone:	1, 2, 21, 22

Applications:
- for explosion endangered areas
- Machine- and apparatus construction
- Measuring and control engineering
- Plant installations

vanjski navoj External thread	br. No.	promjer brtve vanjskog omotača min. max. mm mm Sealing exterior sheath min. max. mm mm	F max. mm F max. mm	promjer brtve unutarnjeg omotača min. max. mm mm Sealing inner sheath min. max. mm mm	ključ veličine (H1) mm Across Flats (H1) mm	ključ veličine (H2) mm Across Flats (H2) mm	ključ veličine (H3) mm Across Flats (H3) mm	ključ veličine (H4) mm Across Flats (H4) mm	E mm E mm	L mm L mm	broj artikla niklano Art. no. nickel-plated	broj artikla mesing Art. no. blank	JP kom. PU pcs.
NPT 3/8“	5	7,0 - 12,0	1,0	4,0 - 8,0	20,0	20,0	20,0	20,0	16,0	67,0	4134059	4134050	1
NPT 3/8“	6	9,0 - 16,0	1,3	6,0 - 12,0	22,0	24,0	24,0	24,0	16,0	71,0	4134069	4134060	1
NPT 1/2“	5	7,0 - 12,0	1,0	4,0 - 8,0	24,0	20,0	20,0	20,0	20,0	71,0	4134109	4134100	1
NPT 1/2“	6	9,0 - 16,0	1,3	6,0 - 12,0	24,0	24,0	24,0	24,0	20,0	75,0	4134119	4134110	1
NPT 1/2“	7	13,0 - 21,0	1,3	8,5 - 15,0	24,0	30,0	30,0	30,0	20,0	76,0	4134129	4134120	1
NPT 3/4“	6	9,0 - 16,0	1,3	6,0 - 12,0	28,0	24,0	24,0	24,0	20,0	75,0	4134209	4134200	1
NPT 3/4“	7	13,0 - 21,0	1,3	8,5 - 15,5	30,0	30,0	30,0	30,0	20,0	76,0	4134219	4134210	1
NPT 3/4“	8	17,0 - 27,5	1,6	12,0 - 19,5	30,0	40,0	40,0	40,0	20,0	93,0	4134229	4134220	1
NPT 1“	8	17,0 - 27,5	1,6	12,0 - 20,5	36,0	40,0	40,0	40,0	25,0	98,0	4134309	4134300	1
NPT 1“	9	22,0 - 34,0	2,0	16,0 - 25,5	40,0	48,0	48,0	48,0	25,0	104,0	4134319	4134310	1
NPT 1 1/4“	9	22,0 - 34,0	2,0	16,0 - 27,5	44,0	48,0	48,0	48,0	25,0	104,0	4134349	4134340	1
NPT 1 1/4“	10	28,0 - 41,0	2,0	21,0 - 33,0	50,0	55,0	55,0	55,0	25,0	109,0	4134359	4134350	1
NPT 1 1/2“	10	28,0 - 41,0	2,0	21,0 - 34,0	55,0	55,0	55,0	55,0	26,0	110,0	4134369	4134360	1
NPT 1 1/2“	11	34,0 - 48,0	2,5	27,0 - 41,0	55,0	64,0	64,0	64,0	26,0	120,0	4134379	4134370	1
NPT 2“	12	39,0 - 54,0	2,5	33,0 - 46,0	65,0	70,0	70,0	70,0	27,0	123,0	4134409	4134400	1
NPT 2“	13	48,0 - 65,0	2,5	40,0 - 53,5	70,0	85,0	85,0	90,0	27,0	139,0	4134419	4134410	1
NPT 2 1/2“	13	48,0 - 65,0	2,5	40,0 - 54,0	80,0	85,0	85,0	90,0	40,0	150,0	4134459	4134450	1
NPT 2 1/2“	14	55,0 - 74,0	2,5	47,0 - 64,5	85,0	95,0	95,0	100,0	40,0	162,0	4134469	4134460	1
NPT 3“	15	65,0 - 83,0	3,2	54,0 - 71,0	100,0	110,0	110,0	125,0	42,0	173,0	4134509	4134500	1
NPT 3“	16	74,0 - 93,0	3,2	63,0 - 79,0	110,0	120,0	120,0	125,0	42,0	171,0	4134519	4134510	1

Kabelska prirubnica za kabelsku uvodnicu ATEX Ex d/e 1F, 3F, 4F

Clamping Bracket for Cable Gland ATEX Ex d/e 1F, 3F, 4F

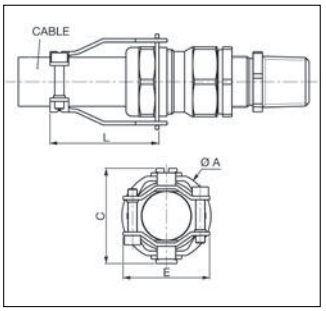

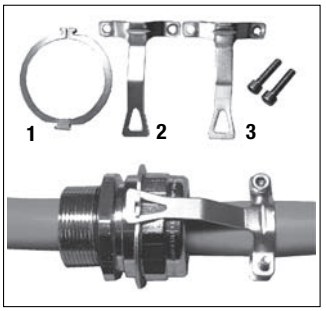

RoHS

Materijal:
- **1** prirubnica nosača: čelik pocinčani
- **2** spona: čelik pocinčani
- **3** vijak CHC: nehrđajući čelik

Radna temperatura:
-40°C do 200°C

Boje/izvedbe:
- sa vanjskom zaštitom od izvlačenja

Svojstva:

certifikat:	LCIE 05 ATEX 6146 X
tip zaštite:	Ex d/e
testni standard:	EN 60079-0, EN 60079-1 EN 60079-7, EN 61241-0, EN 61241-1
grupa uređaja:	II C-II
kategorija:	2 i 3
atmosfera:	G / D
zona:	1, 2 , 21, 22

Upotreba:
- za područja ugrožena eksplozijom
- izrada strojeva i aparata
- tehnologija mjernih i kontrolnih instrumenata
- instalacije u proizvodnim postrojenjima

Material:
- **1** Flange-holder: galvanised steel
- **2** Holder: galvanised steel
- **3** Screw CHC: Stainless steel

Temperature range:
-40°C to 200°C

Colour(s)/Designs:
- external strain relief

Characteristics:

Certificate:	LCIE 05 ATEX 6146 X
Type of protection:	Ex d/e
Test standard:	EN 60079-0, EN 60079-1, EN 60079-7, EN 61241-0, EN 61241-1
Device group:	II C-II
Category:	2 and 3
Atmosphere:	G / D
Zone:	1, 2, 21, 22

Applications:
- for explosion endangered areas
- Machines and apparatus construction
- Measuring and control engineering
- Plant installations

Br./veličina prirubnice No./flange size	L mm L mm	Ø A mm Ø A mm	B mm B mm	C mm C mm	za kabel for cables	broj artikla Art.-No.	JP kom. PU pcs.
5	40,0	25,0	25,0	28,0	Ø 7 - Ø 12	9203505	1
6	42,0	29,0	28,0	32,0	Ø 9 - Ø 16	9203506	1
7	50,0	38,0	37,0	40,0	Ø 13 - Ø 21	9203507	1
8	54,0	48,0	40,0	50,0	Ø 17 - Ø 27.5	9203508	1
9	72,0	58,0	48,0	62,0	Ø 22 - Ø 34	9203509	1
10	72,0	65,0	56,0	70,0	Ø 28 - Ø 41	9203510	1
11	72,0	74,0	66,0	78,0	Ø 34 - Ø 48	9203511	1
12	72,0	80,0	74,0	84,0	Ø 39 - Ø 54	9203512	1

Montaža

Napomena za montažu prije ožičenja:
Stavite prirubnicu nosača na glavu kabelske uvodnice i počnite sa korakom 4.

Primjer montaže 1F

1

Otvorite prirubnicu nosača.

Bend open the flange-holder.

2 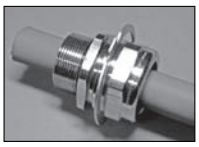

Umetnite prirubnicu nosača na glavu kabelske uvodnice.

Insert the flange-holder on the pressing screw of the cable gland.

3 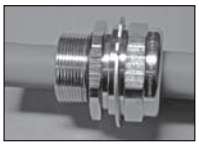

Zatvorite prirubnicu nosača.

Close the flange-holder.

4 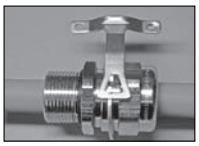

Stavite sponu na prirubnicu nosača vertikalno na smjer kabla.

Put the holder on the flange-holder vertical to the cable.

Assembly

Note for assembly before wiring:
Put the flange-holder on the pressing screw of the cable gland and begin with step 4.

Example Assembly 1F

5 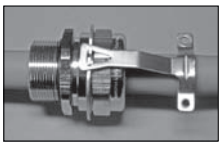

Okrenite sponu za 90°.

Turn holder through 90°.

6 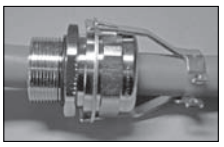

Ponovite korake 4 i 5 sa drugom sponom.

Repeat steps 4 and 5 with the second holder.

7 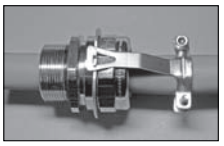

Pričvrstite sa dva vijka.

Tighten the two screws.

ATEX pribor

	Seite
Matice	
mesing niklani	142
Redukcije	
plastika PA Ex e	143
plastika PC Ex e	144
mesing niklani Ex e	145 - 146
mesing niklani Ex d/e	147
Proširenja	
plastika PA Ex e	148
plastika PC Ex e	149
mesing niklani Ex e	150 - 151
mesing niklani Ex d/e	152
Čepovi	
plastika PA Ex e	153
plastika PC Ex e	154
mesing niklani Ex e	155 - 156
Prijelazi	
mesing niklani Ex e	157 - 160
mesing niklani Ex d/e	161 - 162
Brtve plosnate	
neopren	163

ATEX Accessories

	page
Lock nuts	
Nickel-plated brass	142
Reducers	
Plastic PA Ex e	143
Plastic PC Ex e	144
Nickel-plated brass Ex e	145 - 146
Nickel-plated brass Ex d/e	147
Enlargers	
Plastic PA Ex e	148
Plastic PC Ex e	149
Nickel-plated brass Ex e	150 - 151
Nickel-plated brass Ex d/e	152
Plugs	
Plastic PA Ex e	153
Plastic PC Ex e	154
Nickel-plated brass Ex e	155 - 156
Adapter	
Nickel-plated brass Ex e	157 - 160
Nickel-plated brass Ex d/e	161 - 162
Flat sealings	
Neoprene	163

Matica
mesing niklani
PG-/metrički navoj

Lock nuts
nickel-plated brass
PG-/metric thread

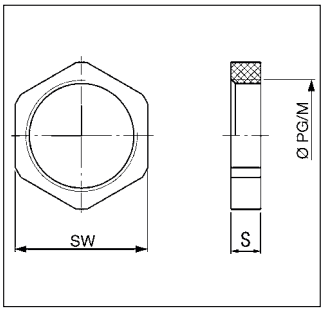

RoHS

Materijal:
mesing niklani

Boje/izvedbe:
- navoj: PG/metrički

Svojstva:
- PG prema „starom“ DIN 46 320

Upotreba:
- odgovara za PG-/metričke ATEX kabelske uvodnice, kao i za ATEX pribor

Material:
nickel-plated brass

Colour(s)/Designs:
- Thread: PG/metric

Characteristics:
- PG acc. to „old“ DIN 46 320

Applications:
- suitable for PG-/metric ATEX Cable Glands as well as ATEX Accessories

navoj Thread	debljina (S) mm Thickness (S) mm	SW mm SW mm	broj artikla niklano Art. no. nickel-plated	JP kom. PU pcs.
PG (prema „starom“ DIN 46320) / PG (acc. to „old“ DIN 46320)				
PG 7	2,9	15,0	6000070	50
PG 9	2,9	18,0	6000096	50
PG 11	2,9	21,0	6000118	50
PG 13,5	3,1	23,0	6000134	50
PG 16	3,1	26,0	6000169	50
PG 21	3,6	32,0	6000215	20
PG 29	4,1	41,0	6000290	20
PG 36	5,1	51,0	6000363	10
PG 42	5,1	60,0	6000428	5
PG 48	5,6	64,0	6000487	5
metrički / metric				
M 12 x 1,5	3,0	15,0	6004121	50
M 16 x 1,5	2,8	19,0	6004165	50
M 16 x 1,5	3,0	20,0	6004164	50
M 20 x 1,5	3,5	24,0	6004202	50
M 25 x 1,5	3,5	30,0	6004253	25
M 32 x 1,5	4,5	35,0	6004326	20
M 40 x 1,5	4,5	45,0	6004407	10
M 50 x 1,5	5,5	55,0	6004504	10
M 63 x 1,5	6,0	70,0	6004636	5
M 75 x 1,5	8,0 (10,0)	80,0	6004750	1

Redukcija
ATEX Ex e
poliamid
25 % ojačana staklenim vlaknima, šesterokutna
metrički navoj

RoHS | Ex | IP 68 | IP 66

Materijal:
- 1: proširenje: poliamid 6
  25 % ojačan staklenim vlaknima
- 2: brtva plosnata: neopren

Radna temperatura:
-35°C do 90°C

Boje/izvedbe:
- crna
- vanjski navoj: metrički
- unutarnji navoj: metrički
- šesterokutna

Reducers
ATEX Ex e
Polyamide
25 % glassfiber reinforced
hexagon
metric thread

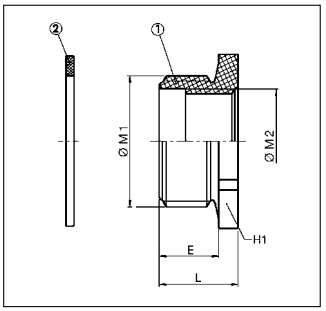

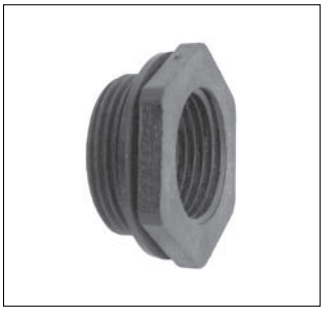

Svojstva:
certifikat: LCIE 03 ATEX 0033 U
tip zaštite: Ex e
testni standard: EN 60079-0, EN 60079-7, EN 61241-0, EN 61241-1
grupa uređaja: II
kategorija: 2 i 3
atmosfera: G / D
zona: 1, 2, 21, 22

Upotreba:
- za područja ugrožena eksplozijom

Material:
- 1: Enlarger: Polyamide 6
  25 % glassfiber reinforced
- 2: Flat Sealing: Neoprene

Temperature range:
-35°C to 90°C

Colour(s)/Designs:
- black
- External thread: Metric
- Internal thread: Metric
- hexagon

Characteristics:
Certificate: LCIE 03 ATEX 0033 U
Type of protection: Ex e
Test standard: EN 60079-0, EN 60079-7, EN 61241-0, EN 61241-1
Device group: II
Category: 2 and 3
Atmosphere: G / D
Zone: 1, 2, 21, 22

Applications:
- for explosion endangered areas

vanjski navoj (Ø M 1) External thread (Ø M 1)	unutarnji navoj (Ø M 2) Internal thread (Ø M 2)	ključ veličine (H1) mm Across Flats (H1) mm	duljina navoja (E) mm Thread length (E) mm	ukupna duljina (L) mm Complete length (L) mm	broj artikla crna RAL 9005 Art.-No. black RAL 9005	JP kom. PU pcs.
M 16 x 1,5	M 12 x 1,5	20,0	8,0	11,0	7218262	50
M 20 x 1,5	M 16 x 1,5	24,0	9,0	12,0	7218263	50
M 25 x 1,5	M 20 x 1,5	30,0	10,0	13,5	7218264	50
M 32 x 1,5	M 25 x 1,5	36,0	11,0	15,0	7218265	25
M 40 x 1,5	M 32 x 1,5	44,0	12,0	16,0	7218266	10
M 50 x 1,5	M 40 x 1,5	55,0	13,0	18,0	7218267	10
M 63 x 1,5	M 50 x 1,5	70,0	15,0	21,0	7218268	10

Redukcija ATEX Ex e

polikarbonat
šesterokutna
PG-navoj

Reducers ATEX Ex e

Polycarbonate
hexagon
PG-thread

RoHS | Ex | IP 68 | IP 66

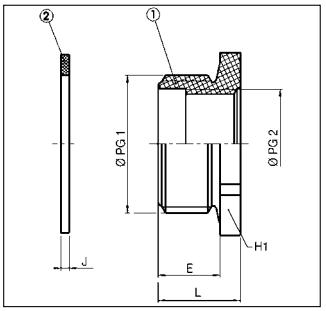

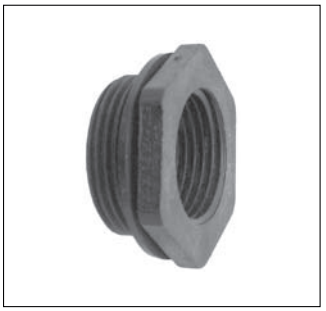

Materijal:
- 1: redukcija: polikarbonat
- 2: brtva plosnata: neopren

Radna temperatura:
-35°C do 95°C

Boje/izvedbe:
- svjetlosiva
- vanjski navoj: PG
- unutarnji navoj: PG
- šesterokutna

Svojstva:
certifikat: LCIE 03 ATEX 0033 U
tip zaštite: Ex e
testni standard: EN 60079-0, EN 60079-7, EN 61241-0, EN 61241-1
grupa uređaja: II
kategorija: 2 i 3
atmosfera: G / D
zona: 1, 2, 21, 22

Upotreba:
- za područja ugrožena eksplozijom

Material:
- 1: Reducer: Polycarbonate
- 2: Flat Sealing: Neoprene

Temperature range:
-35°C to 95°C

Colour(s)/Designs:
- light grey
- External thread: PG
- Internal thread: PG
- hexagon

Characteristics:
Certificate: LCIE 03 ATEX 0033 U
Type of protection: Ex e
Test standard: EN 60079-0, EN 60079-7, EN 61241-0, EN 61241-1
Device group: II
Category: 2 and 3
Atmosphere: G / D
Zone: 1, 2, 21, 22

Applications:
- for explosion endangered areas

vanjski navoj (Ø PG 1) External thread (Ø PG 1)	unutarnji navoj (Ø PG 2) Internal thread (Ø PG 2)	ključ veličine (H1) mm Across Flats (H1) mm	duljina navoja (E) mm Thread length (E) mm	ukupna duljina (L) mm Complete length (L) mm	broj artikla svjetlosiva RAL 7035 Art.-No. light grey RAL 7035	JP kom. PU pcs.
PG 13	PG 11	24,0	9,0	22,0	7008801	50
PG 16	PG 13	27,0	9,0	21,0	7008802	50
PG 16	PG 11	27,0	9,0	14,0	7008803	50
PG 21	PG 16	32,0	11,3	16,3	7008804	20
PG 21	PG 13	32,0	11,0	16,0	7008805	20
PG 21	PG 11	32,0	11,0	16,0	7008806	20
PG 29	PG 21	41,0	12,0	18,0	7008807	20
PG 29	PG 16	41,0	12,0	18,2	7008808	20
PG 29	PG 13	41,0	12,0	18,3	7008809	20
PG 36	PG 29	50,0	14,0	23,0	7008810	10
PG 36	PG 21	55,0	14,0	21,0	7008811	10
PG 36	PG 16	50,0	14,0	19,3	7008812	10
PG 42	PG 29	55,0	16,0	23,0	7008813	5
PG 42	PG 21	55,0	16,0	22,0	7008814	5
PG 48	PG 29	60,0	16,0	22,0	7008815	5

Redukcija ATEX Ex e

mesing niklani metrički navoj

Reducers ATEX Ex e

nickel-plated brass metric thread

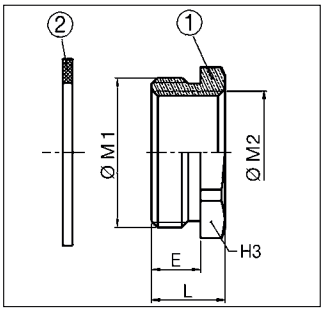

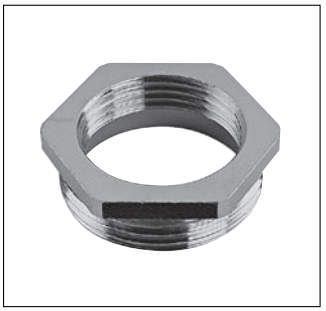

RoHS | Ex | IP 68 | IP 66

Materijal:
- 1: redukcija: mesing niklani
- 2: brtva plosnata: neopren

Radna temperatura:
-40°C do 100°C

Boje/izvedbe:
- vanjski navoj: metrički
- unutarnji navoj: metrički
- šesterokutna

Svojstva:

certifikat:	LCIE 02 ATEX 0038 U
tip zaštite:	Ex e
testni standard:	EN 60079-0, EN 60079-7, EN 61241-0, EN 61241-1
grupa uređaja:	II
kategorija:	2 i 3
atmosfera:	G / D
zona:	1, 2, 21, 22

Upotreba:
- za područja ugrožena eksplozijom

Material:
- 1 Reducer: nickel-plated brass
- 2: Flat Sealing: Neoprene

Temperature range:
-40°C to 100°C

Colour(s)/Designs:
- External thread: Metric
- Internal thread: Metric
- hexagon

Characteristics:

Certificate:	LCIE 02 ATEX 0038 U
Type of protection:	Ex e
Test standard:	EN 60079-0, EN 60079-7, EN 61241-0, EN 61241-1
Device group:	II
Category:	2 and 3
Atmosphere:	G / D
Zone:	1, 2, 21, 22

Applications:
- for explosion endangered areas

vanjski navoj (Ø M 1) External thread (Ø M 1)	unutarnji navoj (Ø M 2) Internal thread (Ø M 2)	ključ veličine (H3) mm Across Flats (H3) mm	duljina navoja (E) mm Thread length (E) mm	ukupna duljina (L) mm Complete length (L) mm	broj artikla niklano Art.-No. nickel-plated	JP kom. PU pcs.
M 16 x 1,5	M 12 x 1,5	20,0	7,0	10,0	6105081	50
M 20 x 1,5	M 16 x 1,5	24,0	7,0	10,0	6105082	50
M 25 x 1,5	M 20 x 1,5	30,0	8,0	11,5	6105083	20
M 32 x 1,5	M 25 x 1,5	36,0	8,5	12,5	6105084	20
M 40 x 1,5	M 32 x 1,5	42,0	8,5	12,5	6105085	10
M 50 x 1,5	M 40 x 1,5	55,0	9,5	14,5	6105086	5
M 63 x 1,5	M 50 x 1,5	70,0	10,5	17,5	6105087	1
M 75 x 1,5	M 63 x 1,5	80,0	11,5	19,5	6105088	1

Redukcija ATEX Ex e

mesing niklani
PG-navoj

Reducers ATEX Ex e

nickel-plated brass
PG-thread

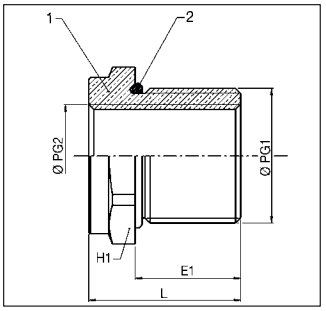

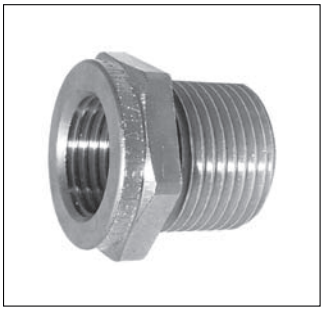

RoHS | Ex | IP 68 | IP 66

Materijal:
- 1: redukcija: mesing niklani
- 2: O-brtva: nitril

mesing na upit

Radna temperatura:
-40°C do 100°C

Boje/izvedbe:
- vanjski navoj: PG
- unutarnji navoj: PG
- šesterokutna

Svojstva:

certifikat:	LCIE 07 ATEX 0013 U
tip zaštite:	Ex e
testni standard:	EN 60079-0, EN 60079-7, EN 61241-0, EN 61241-1
grupa uređaja:	II
kategorija:	2 i 3
atmosfera:	G / D
zona:	1, 2, 21, 22

Upotreba:
- za područja ugrožena eksplozijom

Material:
- 1: Reducer: nickel-plated brass
- 2: O-ring: Nitrile

brass blank on request

Temperature range:
-40°C to 100°C

Colour(s)/Designs:
- External thread: PG
- Internal thread: PG
- hexagon

Characteristics:

Certificate:	LCIE 07 ATEX 0013 U
Type of protection:	Ex e
Test standard:	EN 60079-0, EN 60079-7, EN 61241-0, EN 61241-1
Device group:	II
Category:	2 and 3
Atmosphere:	G / D
Zone:	1, 2, 21, 22

Applications:
- for explosion endangered areas

vanjski navoj (Ø PG 1) External thread (Ø PG 1)	unutarnji navoj (Ø PG 2) Internal thread (Ø PG 2)	ključ veličine (H1) mm Across Flats (H1) mm	duljina navoja (E1) mm Thread length (E1) mm	ukupna duljina (L) mm Complete length (L) mm	broj artikla niklano Art.-No. nickel-plated	JP kom. PU pcs.
PG 9	PG 7	18,0	16,0	23,0	6105060	1
PG 11	PG 7	22,0	16,0	23,0	6105061	1
PG 11	PG 9	22,0	16,0	23,0	6105062	1
PG 13	PG 9	24,0	16,0	23,0	6105063	1
PG 13	PG 11	24,0	16,0	38,0	6105064	1
PG 16	PG 11	26,0	16,0	23,0	6105065	1
PG 16	PG 13	26,0	16,0	38,0	6105066	1
PG 21	PG 13	30,0	16,0	23,0	6105067	1
PG 21	PG 16	30,0	16,0	23,0	6105068	1
PG 29	PG 16	40,0	16,0	23,0	6105069	1
PG 29	PG 21	40,0	16,0	23,0	6105070	1
PG 36	PG 21	50,0	16,0	26,0	6105071	1
PG 36	PG 29	50,0	16,0	26,0	6105072	1
PG 42	PG 29	60,0	16,0	28,0	6105073	1
PG 42	PG 36	60,0	16,0	28,0	6105074	1
PG 48	PG 36 DIN	64,0	16,0	28,0	6105075	1
PG 48	PG 42 DIN	64,0	16,0	40,0	6105076	1
PG 48	PG 36 NFC	64,0	16,0	28,0	6105077	1
PG 48	PG 42 NFC	64,0	16,0	40,0	6105078	1

Redukcija
ATEX Ex d/e
mesing niklani
metrički/NPT-navoj

Reducers
ATEX Ex d/e
nickel-plated brass
metric/NPT-thread

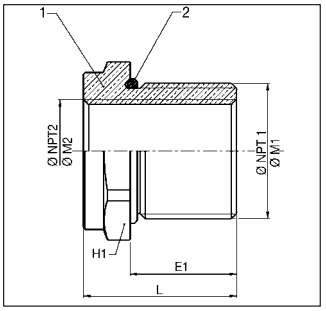

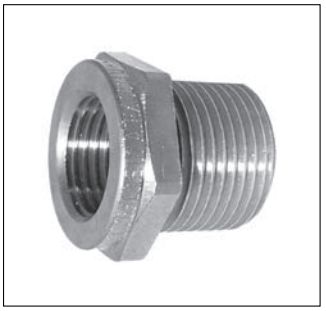

RoHS | Ex | IP 68 | IP 66

Materijal:
- 1: redukcija: mesing niklani
- 2: O-brtva: nitril

mesing na upit

Radna temperatura:
-40°C do 100°C

Boje/izvedbe:
- vanjski navoj: metrički/NPT
- unutarnji navoj: metrički/NPT
- šesterokutna

Svojstva:

certifikat:	LCIE 07 ATEX 0013 U
tip zaštite:	Ex d/e
testni standard:	EN 60079-0, EN 60079-1, EN 60079-7, EN 61241-0, EN 61241-1
grupa uređaja:	II C
kategorija:	2 i 3
atmosfera:	G / D
zona:	1, 2, 21, 22

Upotreba:
- za područja ugrožena eksplozijom

Material:
- 1: Reducer: nickel-plated brass
- 2: O-ring: Nitrile

brass blank on request

Temperature range:
-40°C to 100°C

Colour(s)/Designs:
- External thread: Metric/NPT
- Internal thread: Metric/NPT
- hexagon

Characteristics:

Certificate:	LCIE 07 ATEX 0013 U
Type of protection:	Ex d/e
Test standard:	EN 60079-0, EN 60079-1, EN 60079-7, EN 61241-0, EN 61241-1
Device group:	II C
Category:	2 and 3
Atmosphere:	G / D
Zone:	1, 2, 21, 22

Applications:
- for explosion endangered areas

vanjski navoj (Ø M1/NPT1) External thread (Ø M1/NPT1)	unutarnji navoj (Ø M2/NPT2) Internal thread (Ø M2/NPT2)	ključ veličine (H1) mm Across Flats (H1) mm	duljina navoja (E1) mm Thread length (E1) mm	ukupna duljina (L) mm Complete length (L) mm	broj artikla niklano Art.-No. nickel-plated	JP kom. PU pcs.
metrički / metric						
M 16 x 1,5	M 12 x 1,5	18,0	16,0	22,0	6105010	1
M 20 x 1,5	M 12 x 1,5	24,0	16,0	23,0	6105011	1
M 20 x 1,5	M 16 x 1,5	24,0	16,0	23,0	6105012	1
M 25 x 1,5	M 16 x 1,5	28,0	16,0	23,0	6105013	1
M 25 x 1,5	M 20 x 1,5	28,0	16,0	23,0	6105014	1
M 32 x 1,5	M 20 x 1,5	36,0	16,0	24,0	6105015	1
M 32 x 1,5	M 25 x 1,5	36,0	16,0	24,0	6105016	1
M 40 x 1,5	M 25 x 1,5	44,0	16,0	24,0	6105017	1
M 40 x 1,5	M 32 x 1,5	44,0	16,0	24,0	6105018	1
M 50 x 1,5	M 32 x1,5	55,0	16,0	26,0	6105019	1
M 50 x 1,5	M 40 x1,5	55,0	16,0	26,0	6105020	1
M 63 x 1,5	M 40 x 1,5	70,0	16,0	28,0	6105021	1
M 63 x 1,5	M 50 x 1,5	70,0	16,0	28,0	6105022	1
M 75 x 1,5	M 50 x 1,5	80,0	16,0	28,0	6105023	1
M 75 x 1,5	M 63 x 1,5	80,0	16,0	28,0	6105024	1
M 90 x 1,5	M 63 x 1,5	95,0	20,0	35,0	6105025	1
M 90 x 1,5	M 75 x 1,5	95,0	20,0	35,0	6105026	1
M 100 x 1,5	M 75 x 1,5	110,0	22,0	38,0	6105027	1
M 100 x 1,5	M 90 x 1,5	110,0	22,0	38,0	6105028	1
NPT / NPT						
NPT 3/4"	NPT 1/2"	28,0	20,0	26,0	6105040	1
NPT 1"	NPT 1/2"	36,0	25,0	33,0	6105041	1
NPT 1"	NPT 3/4"	36,0	25,0	33,0	6105042	1
NPT 1 1/4"	NPT 3/4"	44,0	25,0	35,0	6105043	1
NPT 1 1/4"	NPT 1"	44,0	25,0	35,0	6105044	1
NPT 1 1/2"	NPT 1"	50,0	26,0	36,0	6105045	1
NPT 1 1/2"	NPT 1 1/4"	50,0	26,0	36,0	6105046	1
NPT 2"	NPT 1 1/4"	64,0	27,0	39,0	6105047	1
NPT 2"	NPT 1 1/2"	64,0	27,0	39,0	6105048	1
NPT 2"	NPT 1"	64,0	27,0	39,0	6105049	1
NPT 3"	NPT 2"	95,0	42,0	57,0	6105050	1
NPT 3"	NPT 2 1/2"	95,0	42,0	57,0	6105051	1

Proširenje ATEX Ex e

poliamid
25 % ojačan staklenim vlaknima, šesterokutno
metrički navoj

RoHS | Ex | IP 68 | IP 66

Enlargers ATEX Ex e

Polyamide
25 % glassfiber reinforced
hexagon
metric thread

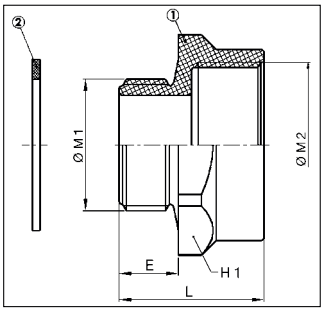

Materijal:
- 1: proširenje: poliamid 6
  25 % ojačan staklenim vlaknima
- 2: brtva plosnata: neopren

Radna temperatura:
-35°C do 90°C

Boje/izvedbe:
- crna
- vanjski navoj: metrički
- unutarnji navoj: metrički
- šesterokutno

Svojstva:

certifikat:	LCIE 03 ATEX 0033 U
tip zaštite:	Ex e
testni standard:	EN 60079-0, EN 60079-7, EN 61241-0, EN 61241-1
grupa uređaja:	II
kategorija:	2 i 3
atmosfera:	G / D
zona:	1, 2, 21, 22

Upotreba:
- za područja ugrožena eksplozijom

Material:
- 1: Enlarger: Polyamide 6
  25 % glassfiber reinforced
- 2: Flat Sealing: Neoprene

Temperature range:
-35°C to 90°C

Colour(s)/Designs:
- black
- External thread: Metric
- Internal thread: Metric
- hexagon

Characteristics:

Certificate:	LCIE 03 ATEX 0033 U
Type of protection:	Ex e
Test standard:	EN 60079-0, EN 60079-7, EN 61241-0, EN 61241-1
Device group:	II
Category:	2 and 3
Atmosphere:	G / D
Zone:	1, 2, 21, 22

Applications:
- for explosion endangered areas

vanjski navoj (Ø M 1) External thread (Ø M 1)	unutarnji navoj (Ø M 2) Internal thread (Ø M 2)	ključ veličine (H1) mm Across Flats (H1) mm	duljina navoja (E) mm Thread length (E) mm	ukupna duljina (L) mm Complete length (L) mm	broj artikla crna RAL 9005 Art.-No. black RAL 9005	JP kom. PU pcs.
M 12 x 1,5	M 16 x 1,5	20,0	8,0	19,0	7218222	50
M 16 x 1,5	M 20 x 1,5	24,0	8,0	20,0	7218223	50
M 20 x 1,5	M 25 x 1,5	30,0	9,0	22,0	7218224	50
M 25 x 1,5	M 32 x 1,5	36,0	10,0	24,0	7218225	25
M 32 x 1,5	M 40 x 1,5	44,0	11,0	26,0	7218226	10
M 40 x 1,5	M 50 x 1,5	55,0	12,0	28,0	7218227	10
M 50 x 1,5	M 63 x 1,5	70,0	13,0	32,0	7218228	10

Proširenje ATEX Ex e
polikarbonat šesterokutno PG-navoj

Enlargers ATEX Ex e
Polycarbonate hexagon PG-thread

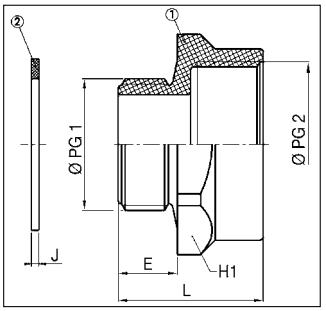

RoHS | Ex | IP 68 | IP 66

Materijal:
- 1: proširenje: polikarbonat
- 2: brtva plosnata: neopren

Radna temperatura:
-35°C do 95°C

Boje/izvedbe:
- svjetlosiva
- vanjski navoj: PG
- unutarnji navoj: PG

Svojstva:
certifikat: LCIE 03 ATEX 0033 U
tip zaštite: Ex e
testni standard: EN 60079-0, EN 60079-7, EN 61241-0, EN 61241-1
grupa uređaja: II
kategorija: 2 i 3
atmosfera: G / D
zona: 1, 2, 21, 22

Upotreba:
- za područja ugrožena eksplozijom

Material:
- 1: Enlarger: Polycarbonate
- 2: Flat Sealing: Neoprene

Temperature range:
-35°C to 95°C

Colour(s)/Designs:
- light grey
- External thread: PG
- Internal thread: PG

Characteristics:
Certificate: LCIE 03 ATEX 0033 U
Type of protection: Ex e
Test standard: EN 60079-0, EN 60079-7, EN 61241-0, EN 61241-1
Device group: II
Category: 2 and 3
Atmosphere: G / D
Zone: 1, 2, 21, 22

Applications:
- for explosion endangered areas

vanjski navoj (Ø PG 1) External thread (Ø PG 1)	unutarnji navoj (Ø PG 2) Internal thread (Ø PG 2)	ključ veličine (H1) mm Across Flats (H1) mm	duljina navoja (E) mm Thread length (E) mm	ukupna duljina (L) mm Complete length (L) mm	broj artikla svjetlosiva RAL 7035 Art.-No. light grey RAL 7035	JP kom. PU pcs.
PG 11	PG 13	24,0	9,0	23,5	7004401	50
PG 13	PG 16	27,0	9,0	23,0	7004402	50
PG 16	PG 21	32,0	10,0	25,5	7004403	50
PG 21	PG 29	41,0	10,0	28,5	7004404	20

Proširenje ATEX Ex e
mesing niklani
PG-navoj

Enlargers ATEX Ex e
nickel-plated brass
PG-thread

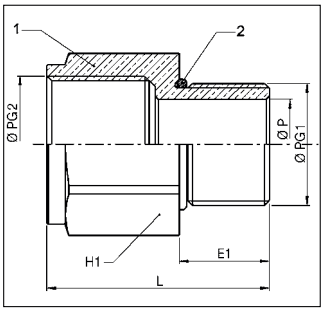

RoHS | Ex | IP 68 | IP 66

Materijal:
- 1: proširenje: mesing niklani
- 2: O-brtva: nitril

mesing na upit

Radna temperatura:
-40°C do 100°C

Boje/izvedbe:
- vanjski navoj: PG
- unutarnji navoj: PG
- šesterokutno

Svojstva:

certifikat:	LCIE 07 ATEX 0013 U
tip zaštite:	Ex e
testni standard:	EN 60079-0, EN 60079-7, EN 61241-0, EN 61241-1
grupa uređaja:	II
kategorija:	2 i 3
atmosfera:	G / D
zona:	1, 2, 21, 22

Upotreba:
- za područja ugrožena eksplozijom

Material:
- 1: Enlarger: nickel-plated brass
- 2: O-ring: Nitrile

brass blank on request

Temperature range:
-40°C to 100°C

Colour(s)/Designs:
- External thread: PG
- Internal thread: PG
- hexagon

Characteristics:

Certificate:	LCIE 07 ATEX 0013 U
Type of protection:	Ex e
Test standard:	EN 60079-0, EN 60079-7, EN 61241-0, EN 61241-1
Device group:	II
Category:	2 and 3
Atmosphere:	G / D
Zone:	1, 2, 21, 22

Applications:
- for explosion endangered areas

vanjski navoj (Ø PG 1) External thread (Ø PG 1)	unutarnji navoj (Ø PG 2) Internal thread (Ø PG 2)	ključ veličine (H1) mm Across Flats (H1) mm	duljina navoja (E1) mm Thread length (E1) mm	ukupna duljina (L) mm Complete length (L) mm	Ø P mm Ø P mm	broj artikla niklano Art.-No. nickel-plated	JP kom. PU pcs.
PG 7	PG 9	18,0	15,0	36,0	7,0	6200520	1
PG 9	PG 11	22,0	15,0	36,0	10,0	6200521	1
PG 11	PG 13	24,0	15,0	37,0	13,5	6200522	1
PG 13	PG 16	27,0	15,0	37,0	15,0	6200523	1
PG 16	PG 21	34,0	15,0	38,0	17,0	6200524	1
PG 21	PG 29	44,0	15,0	38,0	22,0	6200525	1
PG 29	PG 36	55,0	15,0	39,0	30,0	6200526	1
PG 36	PG 42	64,0	15,0	39,0	40,0	6200527	1
PG 42	PG 48 DIN	70,0	15,0	40,0	47,0	6200528	1
PG 42	PG 48 NFC	70,0	15,0	40,0	47,0	6200529	1

Proširenje ATEX Ex e

mesing niklani
metrički navoj

Enlargers ATEX Ex e

nickel-plated brass
metric thread

RoHS | Ex | IP 68 | IP 66

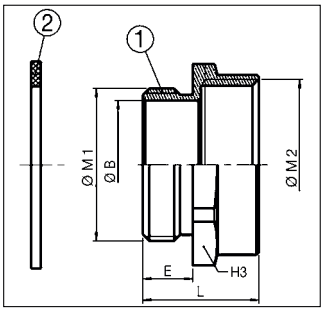

šesterokutno / hexagon

Materijal:
- 1: proširenje: mesing niklani
- 2: brtva plosnata: neopren

Radna temperatura:
-40°C do 100°C

Boje/izvedbe:
- vanjski navoj: metrički
- unutarnji navoj: metrički
- šesterokutno

Svojstva:

certifikat:	LCIE 02 ATEX 0038 U
tip zaštite:	Ex e
testni standard:	EN 60079-0, EN 60079-7, EN 61241-0, EN 61241-1
grupa uređaja:	II
kategorija:	2 i 3
atmosfera:	G / D
zona:	1, 2, 21, 22

Upotreba:
- za područja ugrožena eksplozijom

Material:
- 1: Enlarger: nickel-plated brass
- 2: Flat Sealing: Neoprene

Temperature range:
-40°C to 100°C

Colour(s)/Designs:
- External thread: Metric
- Internal thread: Metric
- hexagon

Characteristics:

Certificate:	LCIE 02 ATEX 0038 U
Type of protection:	Ex e
Test standard:	EN 60079-0, EN 60079-7, EN 61241-0, EN 61241-1
Device group:	II
Category:	2 and 3
Atmosphere:	G / D
Zone:	1, 2, 21, 22

Applications:
- for explosion endangered areas

vanjski navoj (Ø M 1) External thread (Ø M 1)	unutarnji navoj (Ø M 2) Internal thread (Ø M 2)	ključ veličine (H3) mm Across Flats (H3) mm	duljina navoja (E) mm Thread length (E) mm	ukupna duljina (L) mm Complete length (L) mm	broj artikla sa ravnom brtvom niklano Art.-No. with flat sealing nickel-plated	JP kom. PU pcs.
M 12 x 1,5	M 16 x 1,5	18,0	7,0	18,0	6200541	50
M 16 x 1,5	M 20 x 1,5	22,0	7,0	18,0	6200542	50
M 20 x 1,5	M 25 x 1,5	28,0	8,0	19,0	6200543	50
M 25 x 1,5	M 32 x 1,5	36,0	8,5	20,5	6200544	20
M 32 x 1,5	M 40 x 1,5	42,0	8,5	21,0	6200545	20
M 40 x 1,5	M 50 x 1,5	52,0	9,5	22,0	6200546	10
M 50 x 1,5	M 63 x 1,5	65,0	10,5	24,0	6200547	5
M 63 x 1,5	M 75 x 1,5	80,0	11,5	26,0	6200548	1

Proširenje ATEX Ex d/e

mesing niklani metrički/NPT-navoj

Enlargers ATEX Ex d/e

nickel-plated brass metric/NPT-thread

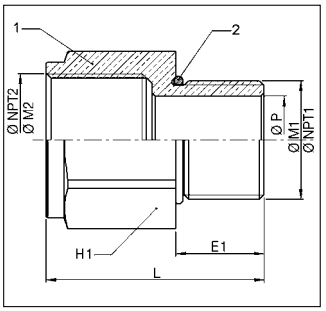

RoHS | Ex | IP 68 | IP 66

Materijal:
- 1: proširenje: mesing niklani
- 2: O-brtva: nitril

mesing na upit

Radna temperatura:
-40°C do 100°C

Boje/izvedbe:
- vanjski navoj: metrički/NPT
- unutarnji navoj: metrički/NPT
- šesterokutno

Svojstva:

certifikat:	LCIE 07 ATEX 0013 U
tip zaštite:	Ex d/e
testni standard:	EN 60079-0, EN 60079-1, EN 60079-7, EN 61241-0, EN 61241-1
grupa uređaja:	II C
kategorija:	2 i 3
atmosfera:	G / D
zona:	1, 2, 21, 22

Upotreba:
- za područja ugrožena eksplozijom

Material:
- 1: Enlarger: nickel-plated brass
- 2: O-ring: Nitrile

brass blank on request

Temperature range:
-40°C to 100°C

Colour(s)/Designs:
- External thread: Metric/NPT
- Internal thread: Metric/NPT
- hexagon

Characteristics:

Certificate:	LCIE 07 ATEX 0013 U
Type of protection:	Ex d/e
Test standard:	EN 60079-0, EN 60079-1, EN 60079-7, EN 61241-0, EN 61241-1
Device group:	II C
Category:	2 and 3
Atmosphere:	G / D
Zone:	1, 2, 21, 22

Applications:
- for explosion endangered areas

vanjski navoj (Ø M1/NPT1) External thread (Ø M1/NPT1)	unutarnji navoj (Ø M2/NPT2) Internal thread (Ø M2/NPT2)	ključ veličine (H1) mm Across Flats (H1) mm	duljina navoja (E1) mm Thread length (E1) mm	ukupna duljina (L) mm Complete length (L) mm	Ø P mm Ø P mm	broj artikla niklano Art.-No. nickel-plated	JP kom. PU pcs.
metrički / metric							
M 12 x 1,5	M 16 x 1,5	19,0	15,0	37,0	7,0	6200501	1
M 16 x 1,5	M 20 x 1,5	23,0	15,0	37,0	11,0	6200502	1
M 20 x 1,5	M 25 x 1,5	28,0	15,0	37,0	15,0	6200503	1
M 25 x 1,5	M 32 x 1,5	36,0	15,0	38,0	20,0	6200504	1
M 32 x 1,5	M 40 x 1,5	44,0	15,0	38,0	26,0	6200505	1
M 40 x1,5	M 50 x 1,5	55,0	15,0	39,0	34,0	6200506	1
M 50 x 1,5	M 63 x 1,5	70,0	16,0	41,0	42,0	6200507	1
M 63 x 1,5	M 75 x 1,5	80,0	17,0	45,0	55,0	6200508	1
M 75 x 1,5	M 90 x 1,5	95,0	18,0	52,0	67,0	6200509	1
M 90 x 1,5	M 100 x 1,5	110,0	22,0	56,0	80,0	6200510	1
NPT / NPT							
NPT 1/2"	NPT 3/4"	30,0	20,0	47,0	15,0	6200512	1
NPT 3/4"	NPT 1"	38,0	20,0	54,0	20,0	6200513	1
NPT 1"	NPT 1 1/4"	50,0	25,0	59,0	26,0	6200514	1
NPT 1 1/4"	NPT 1 1/2"	52,0	25,0	59,0	34,0	6200515	1
NPT 1 1/2"	NPT 2"	64,0	26,0	63,0	40,0	6200516	1
NPT 2"	NPT 2 1/2"	80,0	27,0	78,0	50,0	6200517	1
NPT 2 1/2"	NPT 3"	100,0	40,0	96,0	60,0	6200518	1

Čep
ATEX Ex e
poliamid
25 % ojačan staklenim vlaknima, šesterokutan metrički navoj

RoHS | Ex | IP 68 | IP 66

Plugs
ATEX Ex e
Polyamide
25 % glassfiber reinforced hexagon metric thread

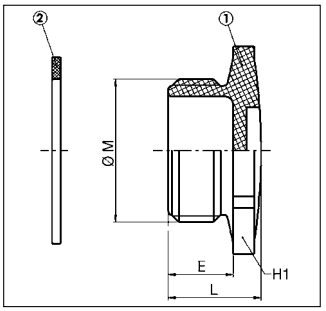

Materijal:
- 1: čep: poliamid 6 sa 25 % ojačan staklenim vlaknima
- 2: brtva plosnata: neopren

Radna temperatura:
-35°C do 90°C

Boje/izvedbe:
- crna
- vanjski navoj: metrički
- šesterokutan sa utorom

Svojstva:
certifikat: LCIE 03 ATEX 0033 U
tip zaštite: Ex e
testni standard: EN 60079-0, EN 60079-7, EN 61241-0, EN 61241-1
grupa uređaja: II
kategorija: 2 i 3
atmosfera: G / D
zona: 1, 2, 21, 22

Upotreba:
- za područja ugrožena eksplozijom

Material:
- 1: Plug: Polyamide 6 with glassfiber reinforced
- 2: Flat sealing: Neoprene

Temperature range:
-35°C to 90°C

Colour(s)/Designs:
- black
- External thread: metric
- hexagon with slot

Characteristics:
Certificate: LCIE 03 ATEX 0033 U
Type of protection: Ex e
Test standard: EN 60079-0, EN 60079-7, EN 61241-0, EN 61241-1
Device group: II
Category: 2 and 3
Atmosphere: G / D
Zone: 1, 2, 21, 22

Applications:
- for explosion endangered areas

vanjski navoj (Ø M) External thread (Ø M)	ključ veličine(H1) mm Across Flats (H1) mm	duljina navoja (E) mm Thread length (E) mm	ukupna duljina (L) mm Complete length (L) mm	broj artikla crna RAL 9005 Art.-No. black RAL 9005	JP kom. PU pcs.
M 12 x 1,5	16,0	8,0	11,0	7218112	50
M 16 x 1,5	20,0	8,0	12,0	7218116	50
M 20 x 1,5	26,0	9,0	13,0	7218120	50
M 25 x 1,5	32,0	10,0	15,0	7218125	20
M 32 x 1,5	40,0	11,0	16,5	7218132	20
M 40 x 1,5	48,0	12,0	18,0	7218140	20
M 50 x 1,5	55,0	13,0	21,0	7218150	10
M 63 x 1,5	70,0	15,0	24,5	7218163	5

Čep
ATEX Ex e
polikarbonat
šesterokutni
PG-navoj

Plugs
ATEX Ex e
Polycarbonate
hexagon
PG-thread

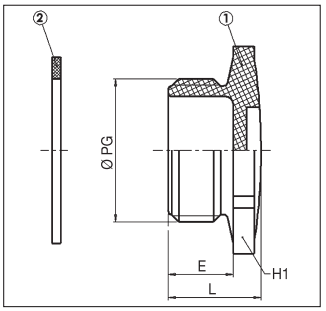

RoHS | Ex | IP 68 | IP 66

Materijal:
- 1: čep: polikarbonat
- 2: plosnata brtva: neopren

Radna temperatura:
-35°C do 95°C

Boje/izvedbe:
- svjetlosiva
- vanjski navoj: PG
- šesterokutan, s prorezom

Svojstva:

certifikat:	LCIE 07 ATEX 0013 U
tip zaštite:	Ex e
testni standard:	EN 60079-0, EN 60079-7, EN 61241-0, EN 61241-1
grupa uređaja:	II
kategorija:	2 und 3
atmosfera:	G / D
zona:	1, 2, 21, 22

Upotreba:
- za područja ugrožena eksplozijom

Material:
- 1: Plug: Polycarbonate
- 2: Flat sealing: Neoprene

Temperature range:
-35°C to 95°C

Colour(s)/Designs:
- light grey
- External thread: PG
- hexagon with slot

Characteristics:

Certificate:	LCIE 07 ATEX 0013 U
Type of protection:	Ex e
Test standard:	EN 60079-0, EN 60079-7, EN 61241-0, EN 61241-1
Device group:	II
Category:	2 and 3
Atmosphere:	G / D
Zone:	1, 2, 21, 22

Applications:
- for explosion endangered areas

vanjski navoj (Ø PG) External thread (Ø PG)	ključ veličine (H1) mm Across Flats (H1) mm	duljina navoja (E) mm Thread length (E) mm	ukupna duljina (L) mm Complete length (L) mm	broj artikla svjetlosiva RAL 7035 Art.-No. light grey RAL 7035	JP kom. PU pcs.
PG 9	19,0	10,0	13,4	7007080	100
PG 11	22,0	10,0	13,8	7007081	100
PG 13	24,0	10,0	13,5	7007082	100
PG 16	27,0	10,0	13,5	7007083	100
PG 21	32,0	12,0	16,5	7007084	50
PG 29	41,0	12,0	18,0	7007085	50
PG 36	55,0	14,0	19,5	7007086	25
PG 42	60,0	16,0	23,5	7007087	25
PG 48	65,0	16,0	25,5	7007088	25

Čep
ATEX Ex e
mesing niklani
šesterokutan
metrički/PG-navoj

Plugs
ATEX Ex e
nickel-plated brass
hexagon
metric/PG-thread

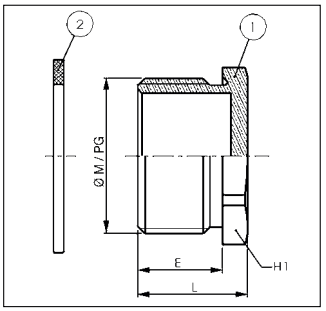

RoHS | Ex | IP 68 | PG | N INMETRO

Materijal:
- 1: mesing niklani
- 2: brtva plosnata: neopren

mesing na upit

Radna temperatura:
-20°C do 80°C

Boje/izvedbe:
- vanjski navoj: metrički/PG
- šesterokutan
- čepovi bez proreza

Svojstva:

certifikat:	LCIE 02 ATEX 0038 U
tip zaštite:	Ex e
testni standard:	EN 60079-0, EN 60079-7, EN 60079-31
grupa uređaja:	II
kategorija:	2 i 3
atmosfera:	G / D
zona:	1, 2, 21, 22

Upotreba:
- za područja ugrožena eksplozijom

Material:
- 1: nickel-plated brass
- 2: O-ring: Neoprene

brass blank on request

Temperature range:
-20°C to 80°C

Colour(s)/Designs:
- External thread: metric/ PG
- hexagon
- Plugs without slit

Characteristics:

Certificate:	LCIE 02 ATEX 0038 U
Type of protection:	Ex e
Test standard:	EN 60079-0, EN 60079-7, EN 60079-31
Device group:	II
Category:	2 and 3
Atmosphere:	G / D
Zone:	1, 2, 21, 22

Applications:
- for explosion endangered areas

vanjski navoj External thread	ključ veličine(H1) mm Across Flats (H1) mm	duljina navoja (E) mm Thread length (E) mm	ukupna duljina (L) mm Complete length (L) mm	broj artikla niklano bez proreza Art.-No. nickel-plated without slit	JP kom. PU pcs.
metrički / metric					
M 12 x 1,5	14,0	10,0	13,0	6702610	50
M 16 x 1,5	17,0	10,0	13,0	6702611	50
M 20 x 1,5	23,0	10,0	13,0	6702612	50
M 25 x 1,5	29,0	10,0	13,5	6702613	20
M 32 x 1,5	39,0	10,0	14,0	6702614	20
M 40 x 1,5	45,0	15,0	19,0	6702615	20
M 50 x 1,5	58,0	15,0	20,0	6702616	10
M 63 x 1,5	70,0	19,0	26,0	6702617	5
M 75 x 1,5	80,0	24,0	32,0	6702618	5
PG / PG					
PG 7	14,0	10,0	13,0	6702651	50
PG 9	17,0	10,0	13,0	6702652	50
PG 11	19,0	10,0	13,0	6702653	50
PG 13	21,0	10,0	13,0	6702654	50
PG 16	23,0	10,0	13,0	6702655	25
PG 21	29,0	12,0	16,0	6702656	20
PG 29	39,0	12,0	16,0	6702657	15
PG 36	50,0	14,0	18,5	6702661	10
PG 42	58,0	16,0	21,0	6702662	10
PG 48	64,0	16,0	22,0	6702663	10
PG 48 DIN	64,0	16,0	22,0	6702664	10

Čep
ATEX Ex e
mesing niklani
šesterokutan
NPT-navoj

Plugs
ATEX Ex e
nickel-plated brass
hexagon
NPT-thread

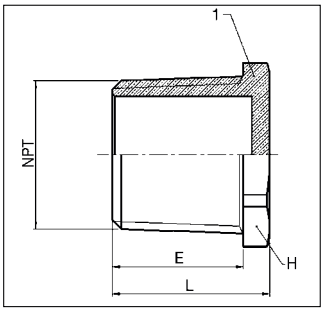

RoHS | Ex | IP 68 | PG | N INMETRO

Materijal:
- 1: mesing niklani
mesing na upit

Radna temperatura:
-20°C do 80°C

Boje/izvedbe:
- vanjski navoj: NPT
- šesterokutan

Svojstva:
certifikat: LCIE 02 ATEX 0038 U
tip zaštite: Ex e
testni standard: EN 60079-0, EN 60079-7, EN 60079-31
grupa uređaja: II
kategorija: 2 i 3
atmosfera: G / D
zona: 1, 2, 21, 22

Upotreba:
- za područja ugrožena eksplozijom

Material:
- 1: nickel-plated brass
brass blank on request

Temperature range:
-20°C to 80°C

Colour(s)/Designs:
- External thread: NPT
- hexagon

Characteristics:
Certificate: LCIE 02 ATEX 0038 U
Type of protection: Ex e
Test standard: EN 60079-0, EN 60079-7, EN 60079-31
Device group: II
Category: 2 and 3
Atmosphere: G / D
Zone: 1, 2, 21, 22

Applications:
- for explosion endangered areas

vanjski navoj External thread	ključ veličine(H1) mm Across Flats (H1) mm	duljina navoja (E) mm Thread length (E) mm	ukupna duljina (L) mm Complete length (L) mm	broj artikla niklano Art.-No. nickel-plated	JP kom. PU pcs.
NPT 1/4"	15,0	15,0	18,0	6702940	50
NPT 3/8"	19,0	15,0	18,0	6702941	50
NPT 1/2"	23,0	20,0	23,0	6702942	50
NPT 3/4"	29,0	20,0	24,0	6702943	20
NPT 1"	36,0	25,0	29,0	6702944	20
NPT 1 1/4"	45,0	25,0	29,0	6702945	20
NPT 1 1/2"	50,0	26,0	31,0	6702946	10
NPT 2"	64,0	27,0	33,0	6702947	5
NPT 2 1/2"	80,0	40,0	48,0	6702948	1
NPT 3"	100,0	40,0	48,0	6702949	1
NPT 4"	125,0	45,0	55,0	6702950	1

Prijelaz
ATEX Ex e
mesing niklani
metrički/PG-navoj

Adapter
ATEX Ex e
nickel-plated brass
metric/PG-thread

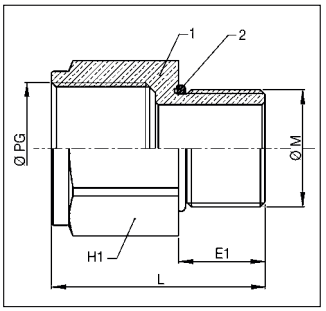

RoHS | Ex | IP 68 | IP 66

Materijal:
- 1: prijelaz: mesing niklani
- 2: O-brtva: nitril

mesing na upit

Radna temperatura:
-40°C do 100°C

Boje/izvedbe:
- vanjski navoj: metrički
- unutarnji navoj: PG
- šesterokutan

Svojstva:

certifikat:	LCIE 07 ATEX 0013 U
tip zaštite:	Ex e
testni standard:	EN 60079-0, EN 60079-7, EN 61241-0, EN 61241-1
grupa uređaja:	II
kategorija:	2 i 3
atmosfera:	G / D
zona:	1, 2, 21, 22

Upotreba:
- za područja ugrožena eksplozijom

Material:
- 1: Adapter: nickel-plated brass
- 2: O-ring: Nitrile

brass blank on request

Temperature range:
-40°C to 100°C

Colour(s)/Designs:
- External thread: Metric
- Internal thread: PG
- hexagon

Characteristics:

Certificate:	LCIE 07 ATEX 0013 U
Type of protection:	Ex e
Test standard:	EN 60079-0, EN 60079-7, EN 61241-0, EN 61241-1
Device group:	II
Category:	2 and 3
Atmosphere:	G / D
Zone:	1, 2, 21, 22

Applications:
- for explosion endangered areas

vanjski navoj (Ø M) External thread (Ø M)	unutarnji navoj (Ø PG) Internal thread (Ø PG)	ključ veličine (H1) mm Across Flats (H1) mm	duljina navoja (E1) mm Thread length (E1) mm	ukupna duljina (L) mm Complete length (L) mm	broj artikla niklano Art.-No. nickel-plated	JP kom. PU pcs.
M 12 x 1,5	PG 7	18,0	16,0	39,0	6402610	1
M 12 x 1,5	PG 9	20,0	16,0	39,0	6402611	1
M 16 x 1,5	PG 11	22,0	16,0	39,0	6402612	1
M 16 x 1,5	PG 13	24,0	16,0	39,0	6402613	1
M 20 x 1,5	PG 11	22,0	16,0	39,0	6402614	1
M 20 x 1,5	PG 13	24,0	16,0	39,0	6402615	1
M 20 x 1,5	PG 16	26,0	16,0	39,0	6402616	1
M 25 x 1,5	PG 16	27,0	16,0	40,0	6402617	1
M 25 x 1,5	PG 21	32,0	16,0	40,0	6402618	1
M 25 x 1,5	PG 29	40,0	16,0	41,0	6402619	1
M 32 x 1,5	PG 29	40,0	16,0	41,0	6402620	1
M 32 x 1,5	PG 36	52,0	16,0	41,0	6402621	1
M 40 x 1,5	PG 29	44,0	16,0	41,0	6402622	1
M 40 x 1,5	PG 36	52,0	16,0	41,0	6402623	1
M 50 x 1,5	PG 36	55,0	16,0	42,0	6402624	1
M 50 x 1,5	PG 42	70,0	16,0	28,0	6402625	1
M 63 x 1,5	PG 48	70,0	16,0	42,0	6402626	1
M 63 x 1,5	PG 48	70,0	16,0	42,0	6402627	1

Prijelaz
ATEX Ex e
mesing niklani
PG-/metrički navoj

Adapter
ATEX Ex e
nickel-plated brass
PG-/metric thread

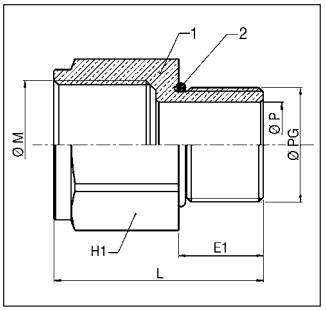

RoHS | Ex | IP 68 | IP 66

Materijal:
- 1: prijelaz: mesing niklani
- 2: O-brtva: nitril

mesing na upit

Radna temperatura:
-40°C do 100°C

Boje/izvedbe:
- vanjski navoj: PG
- unutarnji navoj: metrički
- šesterokutan

Svojstva:

certifikat:	LCIE 07 ATEX 0013 U
tip zaštite:	Ex e
testni standard:	EN 60079-0, EN 60079-7, EN 61241-0, EN 61241-1
grupa uređaja:	II
kategorija:	2 i 3
atmosfera:	G / D
zona:	1, 2, 21, 22

Upotreba:
- za područja ugrožena eksplozijom

Material:
- 1: Adapter: nickel-plated brass
- 2: O-ring: Nitrile

brass blank on request

Temperature range:
-40°C to 100°C

Colour(s)/Designs:
- External thread: PG
- Internal thread: Metric
- hexagon

Characteristics:

Certificate:	LCIE 07 ATEX 0013 U
Type of protection:	Ex e
Test standard:	EN 60079-0, EN 60079-7, EN 61241-0, EN 61241-1
Device group:	II
Category:	2 and 3
Atmosphere:	G / D
Zone:	1, 2, 21, 22

Applications:
- for explosion endangered areas

vanjski navoj (Ø PG) External thread (Ø PG)	unutarnji navoj (Ø M) Internal thread (Ø M)	ključ veličine (H1) mm Across Flats (H1) mm	duljina navoja (E1) mm Thread length (E1) mm	ukupna duljina (L) mm Complete length (L) mm	broj artikla niklano Art.-No. nickel-plated	JP kom. PU pcs.
PG 7	M 16 x 1,5	19,0	16,0	39,0	6402710	1
PG 9	M 20 x 1,5	23,0	16,0	39,0	6402711	1
PG 11	M 12 x 1,5	21,0	16,0	22,0	6402712	1
PG 11	M 16 x 1,5	21,0	16,0	29,0	6402713	1
PG 11	M 20 x 1,5	23,0	16,0	39,0	6402714	1
PG 13	M 12 x 1,5	23,0	16,0	22,0	6402715	1
PG 13	M 16 x 1,5	23,0	16,0	22,0	6402716	1
PG 13	M 20 x 1,5	23,0	16,0	39,0	6402717	1
PG 13	M 25 x 1,5	28,0	16,0	39,0	6402718	1
PG 16	M 20 x 1,5	26,0	16,0	39,0	6402719	1
PG 21	M 16 x 1,5	32,0	16,0	23,0	6402720	1
PG 21	M 20 x 1,5	32,0	16,0	23,0	6402721	1
PG 21	M 25 x 1,5	32,0	16,0	23,0	6402722	1
PG 29	M 20 x 1,5	41,0	16,0	24,0	6402723	1
PG 29	M 25 x 1,5	41,0	16,0	24,0	6402724	1
PG 29	M 32 x 1,5	41,0	16,0	24,0	6402725	1
PG 29	M 40 x 1,5	44,0	16,0	40,0	6402726	1
PG 36	M 25 x 1,5	52,0	16,0	26,0	6402727	1
PG 36	M 32 x 1,5	52,0	16,0	26,0	6402728	1
PG 36	M 40 x 1,5	52,0	16,0	26,0	6402729	1
PG 36	M 50 x 1,5	55,0	16,0	40,0	6402730	1
PG 42	M 40 x 1,5	58,0	16,0	26,0	6402731	1
PG 42	M 63 x 1,5	70,0	16,0	41,0	6402732	1
PG 48	M 63 x 1,5	70,0	16,0	41,0	6402733	1
PG 48	M 75 x 1,5	80,0	16,0	44,0	6402734	1

Prijelaz
ATEX Ex e
mesing niklani
PG-/NPT-navoj

Adapter
ATEX Ex e
nickel-plated brass
PG-/NPT-thread

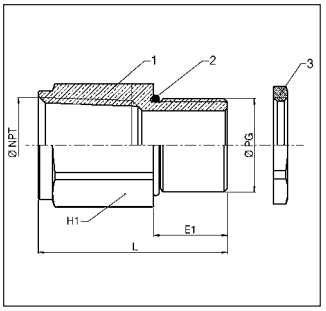

RoHS | Ex | IP 68 | IP 66

Materijal:
- 1: prijelaz: mesing niklani
- 2: O-brtva: nitril

mesing na upit

Radna temperatura:
-40°C do 100°C

Boje/izvedbe:
- vanjski navoj: PG
- unutarnji navoj: NPT
- šesterokutan

Svojstva:

certifikat:	LCIE 07 ATEX 0013 U
tip zaštite:	Ex e
testni standard:	EN 60079-0, EN 60079-7, EN 61241-0, EN 61241-1
grupa uređaja:	II
kategorija:	2 i 3
atmosfera:	G / D
zona:	1, 2, 21, 22

Upotreba:
- za područja ugrožena eksplozijom

Material:
- 1: Adapter: nickel-plated brass
- 2: O-ring: Nitrile

brass blank on request

Temperature range:
-40°C to 100°C

Colour(s)/Designs:
- External thread: PG
- Internal thread: NPT
- hexagon

Characteristics:

Certificate:	LCIE 07 ATEX 0013 U
Type of protection:	Ex e
Test standard:	EN 60079-0, EN 60079-7, EN 61241-0, EN 61241-1
Device group:	II
Category:	2 and 3
Atmosphere:	G / D
Zone:	1, 2, 21, 22

Applications:
- for explosion endangered areas

vanjski navoj (Ø PG) External thread (Ø PG)	unutarnji navoj (Ø NPT) Internal thread (Ø NPT)	ključ veličine (H1) mm Across Flats (H1) mm	duljina navoja (E1) mm Thread length (E1) mm	ukupna duljina (L) mm Complete length (L) mm	broj artikla niklano Art.-No. nickel-plated	JP kom. PU pcs.
PG 9	NPT 1/2"	24,0	16,0	43,0	6402750	1
PG 11	NPT 1/2"	24,0	16,0	42,0	6402751	1
PG 13	NPT 1/2"	24,0	16,0	41,0	6402752	1
PG 13	NPT 3/4"	30,0	16,0	44,0	6402753	1
PG 16	NPT 1/2"	26,0	16,0	40,0	6402754	1
PG 16	NPT 3/4"	30,0	16,0	43,0	6402755	1
PG 21	NPT 1/2"	32,0	16,0	24,0	6402756	1
PG 21	NPT 3/4"	32,0	16,0	40,0	6402757	1
PG 21	NPT 1"	38,0	16,0	49,0	6402758	1
PG 29	NPT 1/2"	41,0	16,0	24,0	6402759	1
PG 29	NPT 3/4"	41,0	16,0	24,0	6402760	1
PG 29	NPT 1"	41,0	16,0	24,0	6402761	1
PG 29	NPT 1 1/4"	50,0	16,0	50,0	6402762	1
PG 36	NPT 1 1/2"	52,0	16,0	50,0	6402763	1
PG 42	NPT 2"	64,0	16,0	54,0	6402764	1

Prijelaz
ATEX Ex e
mesing niklani
NPT-/PG-navoj

Adapter
ATEX Ex e
nickel-plated brass
NPT-/PG-thread

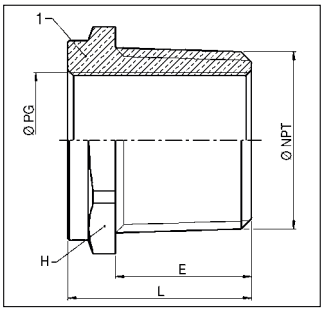

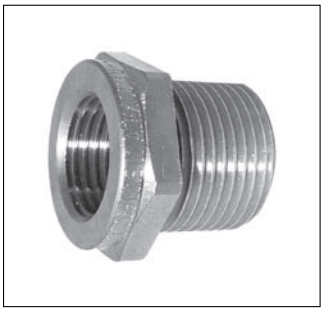

RoHS | Ex | IP 68 | IP 66

Materijal:
- 1: prijelaz:
  mesing niklani

mesing na upit

Radna temperatura:
-40°C do 100°C

Boje/izvedbe:
- vanjski navoj: NPT
- unutarnji navoj: PG
- šesterokutan

Svojstva:

certifikat:	LCIE 07 ATEX 0013 U
tip zaštite:	Ex e
testni standard:	EN 60079-0, EN 60079-7, EN 61241-0, EN 61241-1
grupa uređaja:	II
kategorija:	2 i 3
atmosfera:	G / D
zona:	1, 2, 21, 22

Upotreba:
- za područja ugrožena eksplozijom

Material:
- 1: Adapter: nickel-plated brass

brass blank on request

Temperature range:
-40°C to 100°C

Colour(s)/Designs:
- External thread: NPT
- Internal thread: PG
- hexagon

Characteristics:

Certificate:	LCIE 07 ATEX 0013 U
Type of protection:	Ex e
Test standard:	EN 60079-0, EN 60079-7, EN 61241-0, EN 61241-1
Device group:	II
Category:	2 and 3
Atmosphere:	G / D
Zone:	1, 2, 21, 22

Applications:
- for explosion endangered areas

vanjski navoj (Ø NPT) External thread (Ø NPT)	unutarnji navoj (Ø PG) Internal thread (Ø PG)	ključ veličine (H) mm Across Flats (H) mm	duljina navoja (E) mm Thread length (E) mm	ukupna duljina (L) mm Complete length (L) mm	broj artikla niklano Art.-No. nickel-plated	JP kom. PU pcs.
NPT 1/2"	PG 9	24,0	20,0	27,0	6402850	1
NPT 1/2"	PG 11	24,0	20,0	43,0	6402851	1
NPT 1/2"	PG 13	24,0	20,0	43,0	6402852	1
NPT 1/2"	PG 16	26,0	20,0	43,0	6402853	1
NPT 1/2"	PG 21	32,0	20,0	43,0	6402854	1
NPT 3/4"	PG 13	30,0	20,0	27,0	6402855	1
NPT 3/4"	PG 16	30,0	20,0	43,0	6402856	1
NPT 3/4"	PG 21	32,0	20,0	43,0	6402857	1
NPT 1"	PG 21	36,0	25,0	48,0	6402858	1
NPT 1"	PG 29	41,0	25,0	50,0	6402859	1
NPT 1 1/2"	PG 36	52,0	26,0	52,0	6402860	1
NPT 2"	PG 42	64,0	27,0	39,0	6402861	1

Prijelaz
ATEX Ex d/e
mesing niklani
metrički/NPT-navoj

Adapter
ATEX Ex d/e
nickel-plated brass
metric/NPT-thread

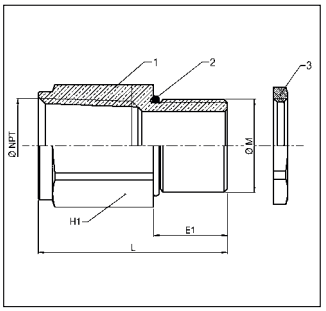

RoHS | Ex | IP 68 | IP 66

Materijal:
- 1: prijelaz: mesing niklani
- 2: O-brtva: nitril

mesing na upit

Radna temperatura:
-40°C do 100°C

Boje/izvedbe:
- vanjski navoj: metrički
- unutarnji navoj: NPT
- šesterokutan

Svojstva:

certifikat:	LCIE 07 ATEX 0013 U
tip zaštite:	Ex d/e
testni standard:	EN 60079-0, EN 60079-1, EN 60079-7, EN 61241-0, EN 61241-1
grupa uređaja:	II C
kategorija:	2 i 3
atmosfera:	G / D
zona:	1, 2, 21, 22

Upotreba:
- za područja ugrožena eksplozijom

Material:
- 1: Adapter: nickel-plated brass
- 2: O-ring: Nitrile

brass blank on request

Temperature range:
-40°C to 100°C

Colour(s)/Designs:
- External thread: Metric
- Internal thread: NPT
- hexagon

Characteristics:

Certificate:	LCIE 07 ATEX 0013 U
Type of protection:	Ex d/e
Test standard:	EN 60079-0, EN 60079-1, EN 60079-7, EN 61241-0, EN 61241-1
Device group:	II C
Category:	2 and 3
Atmosphere:	G / D
Zone:	1, 2, 21, 22

Applications:
- for explosion endangered areas

vanjski navoj (Ø M) External thread (Ø M)	unutarnji navoj (Ø NPT) Internal thread (Ø NPT)	ključ veličine (H1) mm Across Flats (H1) mm	duljina navoja (E1) mm Thread length (E1) mm	ukupna duljina (L) mm Complete length (L) mm	broj artikla niklano Art.-No. nickel-plated	JP kom. PU pcs.
M 16 x 1,5	NPT 1/2"	24,0	15,0	42,0	6402640	1
M 20 x 1,5	NPT 1/2"	24,0	15,0	40,0	6402641	1
M 20 x 1,5	NPT 3/4"	30,0	15,0	42,0	6402642	1
M 25 x 1,5	NPT 1/2"	28,0	15,0	23,0	6402643	1
M 25 x 1,5	NPT 3/4"	30,0	15,0	41,0	6402644	1
M 25 x 1,5	NPT 1"	38,0	15,0	47,0	6402645	1
M 32 x 1,5	NPT 1/2"	36,0	15,0	23,0	6402646	1
M 32 x 1,5	NPT 3/4"	36,0	15,0	23,0	6402647	1
M 32 x 1,5	NPT 1"	38,0	15,0	47,0	6402648	1
M 40 x 1,5	NPT 3/4"	44,0	15,0	23,0	6402649	1
M 40 x 1,5	NPT 1"	44,0	15,0	23,0	6402650	1
M 40 x 1,5	NPT 1 1/4"	46,0	15,0	47,0	6402651	1
M 40 x 1,5	NPT 1 1/2"	52,0	15,0	48,0	6402652	1
M 50 x 1,5	NPT 1"	55,0	16,0	26,0	6402653	1
M 50 x 1,5	NPT 1 1/2"	55,0	16,0	50,0	6402654	1
M 50 x 1,5	NPT 2"	64,0	16,0	50,0	6402655	1
M 63 x 1,5	NPT 1 1/2"	70,0	17,0	28,0	6402656	1
M 63 x 1,5	NPT 2"	70,0	17,0	51,0	6402657	1
M 75 x 1,5	NPT 2"	80,0	18,0	29,0	6402658	1
M 75 x 1,5	NPT 2 1/2"	80,0	18,0	63,0	6402659	1
M 75 x 1,5	NPT 3"	95,0	18,0	70,0	6402660	1

Prijelaz
ATEX Ex d/e
mesing niklani
NPT-/metrički navoj

Adapter
ATEX Ex d/e
nickel-plated brass
NPT-/metric thread

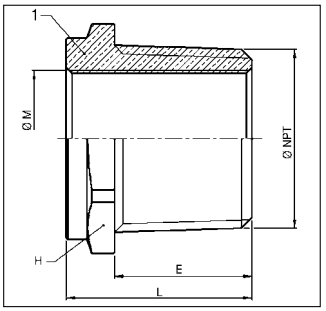

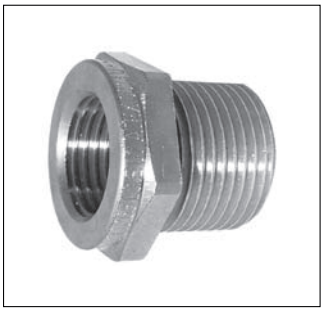

RoHS | Ex | IP 68 | IP 66

Materijal:
- 1: prijelaz:
  mesing niklani

mesing na upit

Radna temperatura:
-40°C do 100°C

Boje/izvedbe:
- vanjski navoj: NPT
- unutarnji navoj: metrički
- šesterokutan

Svojstva:

certifikat:	LCIE 07 ATEX 0013 U
tip zaštite:	Ex d/e
testni standard:	EN 60079-0, EN 60079-1, EN 60079-7, EN 61241-0, EN 61241-1
grupa uređaja:	II C
kategorija:	2 i 3
atmosfera:	G / D
zona:	1, 2, 21, 22

Upotreba:
- za područja ugrožena eksplozijom

Material:
- 1: Adapter: nickel-plated brass

brass blank on request

Temperature range:
-40°C to 100°C

Colour(s)/Designs:
- External thread: NPT
- Internal thread: Metric
- hexagon

Characteristics:

Certificate:	LCIE 07 ATEX 0013 U
Type of protection:	Ex d/e
Test standard:	EN 60079-0, EN 60079-1, EN 60079-7, EN 61241-0, EN 61241-1
Device group:	II C
Category:	2 and 3
Atmosphere:	G / D
Zone:	1, 2, 21, 22

Applications:
- for explosion endangered areas

vanjski navoj (Ø NPT) External thread (Ø NPT)	unutarnji navoj (Ø M) Internal thread (Ø M)	ključ veličine (H) mm Across Flats (H) mm	duljina navoja (E) mm Thread length (E) mm	ukupna duljina (L) mm Complete length (L) mm	broj artikla niklano Art.-No. nickel-plated	JP kom. PU pcs.
NPT 1/2"	M 12 x 1,5	24,0	20,0	27,0	6402810	1
NPT 1/2"	M 16 x 1,5	24,0	20,0	27,0	6402811	1
NPT 1/2"	M 20 x 1,5	24,0	20,0	42,0	6402812	1
NPT 1/2"	M 25 x 1,5	28,0	20,0	42,0	6402813	1
NPT 3/4"	M 16 x 1,5	28,0	20,0	27,0	6402814	1
NPT 3/4"	M 20 x 1,5	28,0	20,0	27,0	6402815	1
NPT 3/4"	M 25 x 1,5	28,0	20,0	42,0	6402816	1
NPT 1"	M 20 x 1,5	36,0	25,0	33,0	6402817	1
NPT 1"	M 25 x 1,5	36,0	25,0	33,0	6402818	1
NPT 1"	M 32 x 1,5	36,0	25,0	48,0	6402819	1
NPT 1 1/4"	M 25 x 1,5	44,0	25,0	33,0	6402820	1
NPT 1 1/4"	M 32 x 1,5	44,0	25,0	33,0	6402821	1
NPT 1 1/2"	M 32 x 1,5	50,0	26,0	35,0	6402822	1
NPT 1 1/2"	M 40 x 1,5	50,0	26,0	35,0	6402823	1
NPT 1 1/2"	M 50 x 1,5	55,0	26,0	51,0	6402824	1
NPT 2"	M 50 x 1,5	64,0	27,0	36,0	6402825	1
NPT 2"	M 63 x 1,5	70,0	27,0	55,0	6402826	1
NPT 2"	M 75 x 1,5	80,0	27,0	55,0	6402827	1
NPT 2 1/2"	M 50 x 1,5	80,0	40,0	53,0	6402828	1
NPT 2 1/2"	M 63 x 1,5	80,0	40,0	53,0	6402829	1
NPT 3"	M 63 x 1,5	90,0	42,0	55,0	6402830	1
NPT 3"	M 75 x 1,5	90,0	42,0	55,0	6402831	1

Brtva plosnata
neopren
PG-/metrički navoj

Flat Sealings
Neoprene
PG-/metric thread

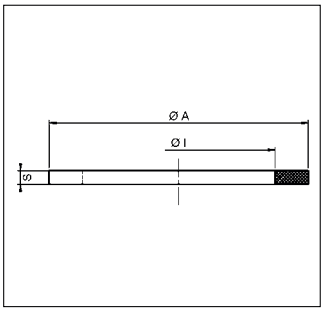

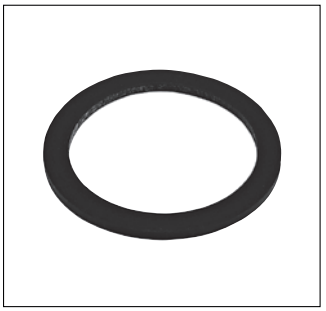

RoHS

Materijal:
neopren

Radna temperatura:
-40°C do 100°C

Boje/izvedbe:
- crna
- navoj: PG/metrički

Upotreba:
- odgovara za PG-/metričke ATEX kabelske uvodnice, kao i za ATEX pribor

Material:
Neoprene

Temperature range:
-40°C to 100°C

Colour(s)/Designs:
- black
- Connecting thread: PG/metric

Applications:
- suitable for PG-/metric ATEX Cable Glands as well as ATEX Accessories

navoj Connecting thread	tip Type	vanjski promjer (A) mm External diameter (A) mm	unutarnji promjer (I) mm Internal diameter (I) mm	debljina (S) mm Thickness (S) mm	broj artikla crna Art. no. black	JP kom. PU pcs.
PG / PG						
PG 7		17,0	11,3	1,2	8113301	100
PG 9		20,0	13,9	1,2	8113302	100
PG 11		23,0	17,1	1,2	8113303	100
PG 13,5		25,0	19,0	1,2	8113304	100
PG 16		27,0	21,0	1,2	8113305	100
PG 21		34,0	26,6	1,5	8113306	50
PG 29		45,0	35,2	1,5	8113307	50
PG 36		56,0	45,2	1,5	8113308	50
PG 42		67,0	52,2	1,5	8113309	50
PG 48		72,0	57,7	1,5	8113310	50
metrički / metric						
M 12 x 1,5	12 F	15,0	10,0	1,2	8113490	100
M 16 x 1,5	16 F	20,0	13,9	1,2	8113302	100
M 20 x 1,5	20 F	24,0	18,0	1,2	8113492	100
M 25 x 1,5	25 F	30,0	23,0	1,2	8113493	100
M 32 x 1,5	32 F	40,0	30,0	1,5	8113494	100
M 40 x 1,5	40 F	48,0	38,0	1,5	8113495	100
M 50 x 1,5	50 F	58,0	48,0	1,5	8113496	100
M 63 x 1,5	63 F	75,0	61,0	1,5	8113497	100
M 75 x 1,5	75 F	90,0	73,0	1,5	8113498	100

Sustavi za zrak i tekućine / Air & Fluid Systems

	Stranica		page
Sustavi za zrak i tekućine	2-3	**Air & Fluid Systems**	2-3
Jednoslojne cijevi		**Monolayer tubes**	
Rebraste cijevi		Corrugated tubes	
Cijevi za tekućine za pranje stakla	4	Wiper Water tube	4
Cijevi za gorivo	4	Fuel tube	4
Višeslojne cijevi		**Multilayer tubes**	
Rebraste cijevi	5	Corrugated tube	5
Glatke cijevi	5	Smooth tube	5
Cijevi za posebne namjene	6	**Special Tube**	6

Sustavi za zrak i tekućine

Personalizirana rješenja
Komponente i moduli

Jednoslojne/višeslojne cijevi

Cijevi za posebne namjene

(1- do 5-slojeva)

- rebraste cijevi
- glatke cijevi

Sustavi za pranje vjetrobranskog stakla i za rashladne tekućine

Cijevi za gorivo/ulje

Razvodi zraka

Cijevi za ventilaciju

Vakuum cijevi

Cijevi za sustave zračnih kočnica

Cijevi za punjenje

Odvodne cijevi

Cijevi za pitku vodu

Brzospajajući sustavi

Kompletni sustavi:

npr. sustavi za kontrolu emisije ispušnih plinova

Usluge:

Montaža sklopova:

- ručna
- poluautomatska
- potpuno automatizirane linije sklapanja

Ispitivanje otpornosti na pritisak

Hidrostatska ispitivanja

Customized Solutions
Components and Modules

Single-/Multilayer Tubes
Special tube
(1- up to 5-layers)
Corrugated Tubes
Smooth Tubes
Windscreen-Washer-, Coolant Systems
Fuel-/Oil Tubes
Air Flow Routing
Ventilation Tubes
Vacuum Tubes
Tubes for Air-Brake Systems
Filling Tubes
Drain Tubes
Drinking Water Tubes
Quick Coupling Systems

Complete Systems:
e.g. Urea Systems for Exhaust Emission Purification

Services:
Assembly Group Manufacturing
Manual
Semi-Automatic
Fully Automatic Assembly Lines
Pressure Tests
Hxdrostatic Tests

Cijev za tekućine za pranje stakla
crna

Wiper Water tube
black

PA 12
PA 612
PE

80°
-40°

Materijal:
Poliamid 12
Poliamid 612
PE (Polietilen) isprepleteni

Maksimalna temperatura:
kratkotrajno: 110°C

Svojstva:
- vrlo mali radijus savijanja (bez prijeloma rebraste cijevi)
- krajevi su prilagođeni uobičajenim spojnim sustavima i razvodima kao i pumpama za vodu

Osobine:
- otpornost na uobičajene tekućine /deterdžente za pranje stakla kao i na utjecaj benzinskog i dizelskog goriva

Primjena:
- U autoindustriji za sustave razvoda tekućina za pranje prednjeg i stražnjeg stakla

Material:
Polyamide 12
Polyamide 612
PE (Polyethylene) cross linked

Maximum Temperature:
short time: 110°C

Characteristics:
- Very small bending radius possible (no kinking of corrugated tube)
- End-pieces adapted to customary connector interfaces and manifolds as well as windshield washer pump

Features:
- Resistent to customary windshield wiper washing detergents as well as gasoline and fuel

Applications:
- Automotive windshield wiper pipeline for front and rear windshield wiping system

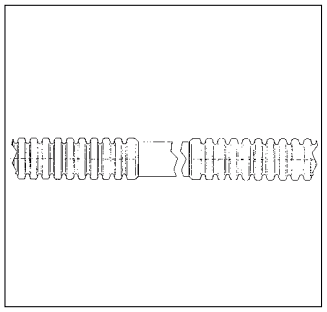

NW NW	A-Ø mm A-Ø mm	dužina* mm length mm	PA 12 br. artikla PA 12 Art. no.	PA 612 br. artikla PA 612 Art. no.	PE isprepleteni br. artikla PE cross linked Art. no.	JP kom. PU pcs.
4,5	7,1	112,0	**9842000**	**9844000**	**9843000**	2600
4,5	7,1	140,0	**9842001**	**9844001**	**9843001**	4000
4,5	7,1	168,0	**9842002**	**9844002**	**9843002**	3600
4,5	7,1	308,0	**9842003**	**9844003**	**9843003**	1300
4,5	7,1	420,0	**9842004**	**9844004**	**9843004**	850
4,5	7,1	560,0	**9842005**	**9844005**	**9843005**	1200
4,5	7,1	616,0	**9842006**	**9844006**	**9843006**	1200
4,5	7,1	728,0	**9842007**	**9844007**	**9843007**	1200
4,5	7,1	812,0	**9842008**	**9844008**	**9843008**	1000
4,5	7,1	1091,0	**9842009**	**9844009**	**9843009**	2000
4,5	7,1	1455,0	**9842010**	**9844010**	**9843010**	800
4,5	7,1	1595,0	**9842011**	**9844011**	**9843011**	800
4,5	7,1	2931,0	**9842012**	**9844012**	**9843012**	450

Cijev za gorivo

Fuel tube

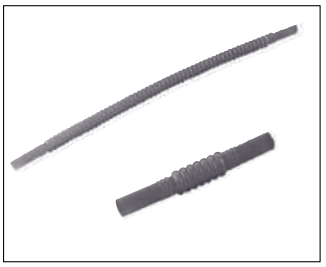

PA 11
PA 12

Materijal:
Poliamid 11
Poliamid 12

Svojstva:
- vrlo mali radijus savijanja (bez prijeloma rebraste cijevi)
- krajevi su prilagođeni uobičajenim promjerima za spajanje

Osobine:
- Otpornost na uobičajena dizelska i benzinska goriva

Primjena:
- Spojevi za gorivo i razvodi goriva

Material:
Polyamide 11
Polyamide 12

Characteristics:
- Very small bending radius possible (no kinking of corrugated tube)
- End-pieces adapted to customary connection diameters

Features:
- Resistant to customary gasoline and fuel

Applications:
- Benzine connectors and connection Lines

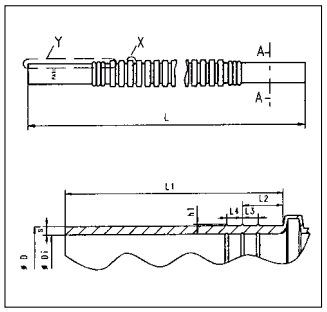

NW NW	A-Ø mm A-Ø mm	I-Ø mm I-Ø mm	PA 11 PA 11	PA 12 PA 12	JP PU
7,5	10,1	7,7	na upit / on request	na upit / on request	na upit / on request

Narezane dužine na upit / Cutted length available on request
*Ostale dužine do 6 metara na upit / Further lengths till 6 meter on request
Crtež broj / drawing-no.: 98441001, 98405000, 98431001

Izvod iz proizvodnog asortimana

Excerpt of manufacturing production line

Prema zahtjevima klijenata proizvodimo 1-5 slojne glatke i rebraste cijevi za sva područja primjene na sustavima zraka i tekućina.

We manufacture 1 till 5 layer of smooth tube and corrugated tube after customer requirements for all Air & Fluid of ranges of application.

1- do 5-slojne glatke cijevi / 1 till 5 layer smooth tube

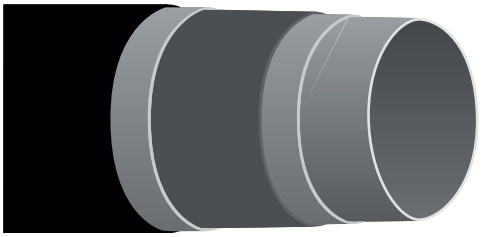

1- do 5-slojne rebraste cijevi / 1 till 5 layer corrugated tube

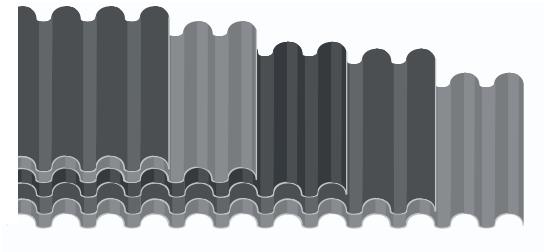

Promjer:
Unutarnji: 2 mm
Vanjski: 25 mm
Ostali promjeri na upit.

Diameter:
Inner: 2 mm
Outer: 25 mm
Further diameter on request

Nazivni promjer:
NW 6 do NW 34
Ostali nazivni promjeri na upit.

Nominal widths:
NW 6 till NW 34
Further nominal widths on request

materijali vanjski sloj / **Materials outer layer**	**zaštitni sloj** / **barrier layer**	**sredstvo lijepljenja** / **adhesive agent**	**unutrašnji sloj** / **inner layer**
PA 6	EVOH	Prema specifikacijama klijenta / after customer requirement	PA 6
PA 11			PA 11
PA 12			PA 12
PP	PVDF		PP
PE			PE
TPE			TPE
PUR	ETFE		PUR
PVC			PVC
FEP			FEP
PBT			PBT

Možemo proizvoditi prema slijedećim specifikacijama klijenata / We can manufacture according to the following customer's requests, e. g.:

Proizvođač / **OEM**	**Specifikacija** / **Specification**	**Proizvođač** / **OEM**	**Specifikacija** / **Specification**
Audi	prema VW TL 524 35 B	KIA	Blueprint
BMW	QV 16 006	Land Rover	FS10
DAEWOO	EDS-M-5190	MAZDA	ZL 01 12 49 XE
Daimler Chrysler	SAE J2260	MCC	Blueprint
Daimler Chrysler	PF-8813 SAE J2260	MG Rover	FS10
Daimler Chrysler	PF 8813 SAE J2260	MITSUBISHI	ES-X60625 ES-X60628
Fiat	9.02137/01	MITSUBISHI	ES-X60625 ES-X60628
Ford	WSS-M98D33-A3/-A4	NEDCAR	TR09447931
Ford	WSS-M98D33-A3/-A4	OPEL/SAAB	GME 08100
GM	GM213M GM6406M	PORSCHE	PTL 14059-2
GM	GME 08 100	PSA	STE 96.421.341.99
HYUNDAI	MS 211-55	VOLKSWAGEN	acc. to VW TL 524 35
ISUZU	GM213M GM6406M	VOLVO	TR09447931

Posebne cijevi za sustave grijanja i hlađenja

Specialty tube for heating and cooling systems

Materijal:
polietilen
PE-zaštitni sloj
EVOH zaštitni sloj protiv oksidacije
opleteni nehrđajući čelik ASI

Radna temperatura:
-40° C do 80° C / 200 °C**

Boje/izvedbe:
nehrđajući čelik

Pribor:
pribor za krajeve rebrstih cijevi

Svojstva:
- pogodni za spajanje na toplinsku pumpu
- certificirani za DVGW - W270, KTW
- difuzija kisika prema DIN 4726
- mjerenje buke prema DIN EN ISO 3745
- opletene nehrđajućim čelikom za rebraste cijevi
- 5-slojne cijevi
- visoka savitljivost
- otpornost na difuziju kisika
- otpornost na kiseline
- otpornost na lužine
- otpornost na prodiranje aerosola
- otpornost na prodiranje hidrokarbonata

Upotreba:
- spojevi na toplinske pumpe
- primjena u sustavima grijanja i hlađenja bez prisutnosti kisika
- pogledajte i *)

Material:
Polyethylene
PE-protection layer
Oxygen diffusion barrier EVOH
Braiding stainless steel AISI

Temperature range:
-40° C to 80° C / 200 °C**

Colour(s)/Designs:
Stainless steel

Accessories:
Fittings on corrugated tube ends

Features:
- Suitable for connection to heat pump
- DVGW - W270, KTW approvals
- Oxygen diffusion acc. to DIN 4726
- Noise measurement acc. to DIN EN ISO 3745
- Stainless steel braiding for corrugated tube
- 5-layer tube
- Highly flexible
- Oxygen diffusion-tight
- Acid-resistant
- Alkali-resistant
- Permeation-proof against aerosols
- Permeation-proof against hydro-carbons

Applications:
- Heat pump connection
- Oxygen-tight applications HVAC/ plumbing
- see also *)

opis Description	spoj Connection	duljina Length	ostale duljine Other Lengths	broj artikla Art.-No.	JP PU
02-nepropusno DN 12 02-tight DN 12	2 x matica 1/2" 2 x connection nut 1/2"	0,5 m 0,5 m	na upit on request	**3910001**	na upit on request
02-nepropusno DN 12 02-tight DN 12	2 x matica 1/2" 2 x connection nut 1/2"	1,0 m 1,0 m	na upit on request	**3910002**	na upit on request
02-nepropusno DN 20 02-tight DN 20	2 x matica 3/4" 2 x connection nut 3/4"	0,5 m 0,5 m	na upit on request	**3910003**	na upit on request
02-nepropusno DN 20 02-tight DN 20	2 x matica 3/4" 2 x connection nut 3/4"	1,0 m 1,0 m	na upit on request	**3910004**	na upit on request
02-nepropusno DN 25 02-tight DN 25	2 x matica 1" 2 x connection nut 1"	0,5 m 0,5 m	na upit on request	**3910005**	na upit on request
02-nepropusno DN 25 02-tight DN 25	2 x matica 1" 2 x connection nut 1"	1,0 m 1,0 m	na upit on request	**3910006**	na upit on request

opis Description	spoj Connection	duljina Length	ostale duljine Other Lengths	broj artikla Art.-No.	JP PU
02-nepropusno DN 25 02-tight DN 25	John Guest 22 x matica 1" John Guest 22 x connection nut 1"	0,5 m 0,5 m	na upit on request	**3910007**	na upit on request
02-nepropusno DN 25 02-tight DN 25	John Guest 22 x matica 1" John Guest 22 x connection nut 1"	0,8 m 0,8 m	na upit on request	**3910008**	na upit on request
02-nepropusno DN 25 02-tight DN 25	John Guest 22 x matica 1" John Guest 22 x connection nut 1"	1,0 m 1,0 m	na upit on request	**3910009**	na upit on request
02-nepropusno DN 25 02-tight DN 25	John Guest 22 x matica 1" John Guest 22 x connection nut 1"	0,5 m 0,5 m	na upit on request	**3910010**	na upit on request
02-nepropusno DN 25 02-tight DN 25	John Guest 22 x matica 1" John Guest 22 x connection nut 1"	0,8 m 0,8 m	na upit on request	**3910011**	na upit on request
02-nepropusno DN 25 02-tight DN 25	John Guest 22 x matica 1" John Guest 22 x connection nut 1"	1,0 m 1,0 m	na upit on request	**3910012**	na upit on request

Moguće su različite geometrije spajanja (IG, AG, utični spoj, poseban navoj, spajanje pod kutem) /
Various connection geometries are possible (IG, AG, pushfitting, special-purpose thread, angular connections)
*) Cijevi mogu biti opletene materijalom po izboru pa smo u mogućnosti isporučiti visoko fleksibilne cijevi sa širokom paletom primjene. /
*) Each material is usable as an inliner so that a highly flexible tube for a wide range of applications can be supplied.
**) Otpornost na temperature preko 200 °C (ovisno o opletenoj izvedbi) / Temperature-resistant up to more than 200 °C (depending on inliner)

Sastav slojeva	Posebna svojstva	Primjena	Radna temperatura
pletenice od nehrđajućeg čelika AISI PE sredstvo za lijepljenje EVOH difuzijska barijera sredstvo za lijepljenje PE	nepropusnost	sustavi grijanja, ventilacije i klima uređaja, toplinske pumpe, hlađeni stropovi, zaštita zdravlja	do 80°C
pletenice od nehrđajućeg čelika AISI PE sredstvo za lijepljenje EVOH difuzijska barijera sredstvo za lijepljenje PA11	električki provodljiv unutarnji sloj, otpornost na gorivo i ulje, nepropusnost	spajanje naftnih tankova, vodovi goriva, cjevovodi na crpkama goriva	do 80°C
pletenice od nehrđajućeg čelika AISI PFA	otpornost na kiseline i alkalne otopine	kemijska industrija, spojni vodovi turbopunjač - sustav ubrizgavanja goriva	do 240°C
pletenice od nehrđajućeg čelika AISI PE	DVGW/KTW certifikat (certifikat za pitku vodu)	vodovod i odvodnja, sustavi napajanja za velike aparate za kavu, prehrambena industrija	do 80°C
pletenice od nehrđajućeg čelika AISI PPA	otpornost na ulje i uljne pare	vozila, autoindustrija	do 200°C
pletenice od nehrđajućeg čelika AISI PA	otpornost na Pentosin HB48 i kočione tekućine	željeznica	do 120°C

Layer composition	Special features	Applications	Temperature range
Stainless steel braiding AISI PE Adhesion promotor EVOH diffusion barrier Adhesion promoter PE	Permeation-proof	HVAC circuits, heat pumps, cooling ceilings, healthcare	to 80°C
Stainless steel braiding AISI PE Adhesion promotor EVOH diffusion barrier Adhesion promoter PA11	Electrically conductive inside layer, resistant to fuel & oil, permeation-proof	Connection of oil tanks, fuel line, connecting lines at filling stations	to 80°C
Stainless steel braiding AISI PFA	Resistant to acids & alkaline solutions	Chemical industry, turbocharger – injection system connecting lines	to 240°C
Stainless steel braiding AISI PE	DVGW / KTW approval (drinking water approval)	Sanitary/plumbing connecting lines, feeder lines for large coffee makers, food industry	to 80°C
Stainless steel braiding AISI PPA	Resistant to oil, oil mist	Automotive	to 200°C
Stainless steel braiding AISI PA	Resistant to Pentosin HB48 and brake fluid	Rail	to 120°C

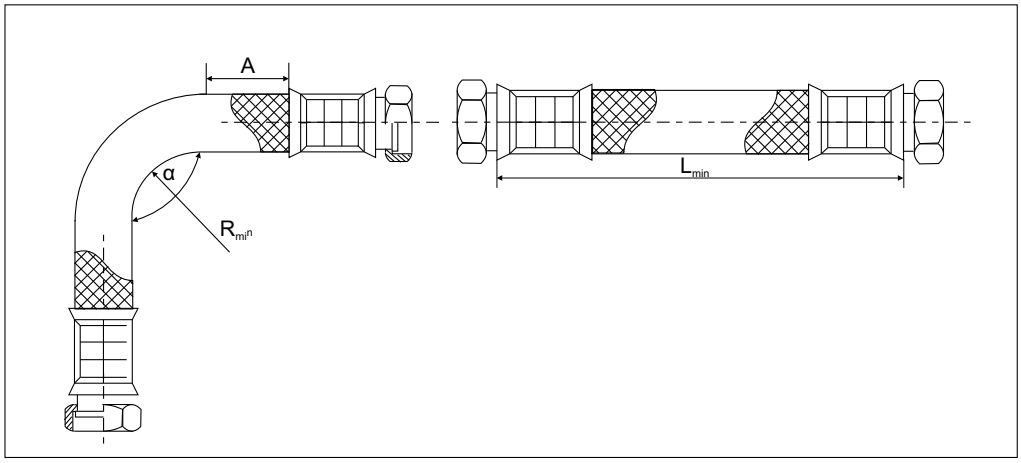

polumjer savijanja / Bending radius

DN	A/R	$L_{min.}$	$L_{min.}$ α = 90°	$L_{min.}$ α = 180°	$L_{min.}$ α = 360°	Radni tlak Operating pressure bar	Tlak pucanja Burst pressure bar
10	40	80	180	250	400	10	100
12	40	80	200	270	420	10	90
20	70	100	330	465	725	10	70
25	100	125	455	635	1000	10	60
40	160	160	708	996	1575	6	50
50	180	210	785	1115	1760	6	40

Dimenzije u mm
Sve prikazane dimenzije (osim navedene širine) su minimalne dimenzije, koje se smiju prekoračiti ako je moguće.

ZAJEDNIČKO ZA SVE:
- pletenica od nehrđajućeg čelika
- pletenica od najlonskog konca
- navoj po izboru
- spojni materijal: svijetli, poniklani mjed, nehrđajući čelik i prema specifikaciji kupca
- geometrija spajanja: utični spoj, pričvrsna matica, spoj navojem i prema zahtjevima kupca
- duljina prema zahtjevu kupca

Dimensions in mm
All dimensions stated (except for rated width) are minimum dimensions, which should be exceeded if possible.

COMMON TO ALL:
- Stainless steel wire braiding
- Nylon thread braiding
- Identification thread available
- Connection material: bright, nickel-plated brass, stainless steel and customer-specific
- Connection geometry: push fitting, connection nut, threaded connection and customized
- Customized length

ADR-GGVS
uvodnice + pribor

ADR-GGVS
Glands + Accessories

5.1

ADR-GGVS
konektori + ABS kabeli

ADR-GGVS
Connectors + ABS Conduits

5.2

ADR-GGVS
pribor

ADR-GGVS
Accessories

5.3

Razvodne kutije +
priključne kutije

Distribution Boxes +
Junction Boxes

5.4

Elektromehaničke
komponente

Electromechanical
Components

5.5

ADR: Europski sporazum o internacionalnom cestovnom transportu opasnih roba
GGVS: Njemačka tehnička pravila o cestovnoj regulaciji opasnih roba
ADR: European agreement concerning the international carriage of dangerous goods by road
GGVS: German technical rules for dangerous goods-regulation road

RoHS: sukladnost na zahtjev
RoHS: conformance on request

5.1

ADR-GGVS
Uvodnice + pribor

ADR-GGVS
Glands + Accessories

	stranica
Pregled	
spajanje rebrastih cijevi + uvodnica	4
Sklopovi za montažu	
T-uvodnice	5 - 6
Redukcije za T-uvodnice	7
Spojne uvodnice	8 - 10
Proširenja	11
Redukcije	12
Spojne uvodnice za konektore na cisternama	13

	page
Overviews	
Combination corrugated Tubes + Glands	4
Assembly Packages	
T-Glands	5 - 6
Reducers for T-Glands	7
Connection Glands	8 - 10
Enlargements	11
Reducers	12
Connection Glands for Tanker Connectors	13

Spajanje rebrastih cijevi i uvodnica

Combination corrugated Tubes and Glands

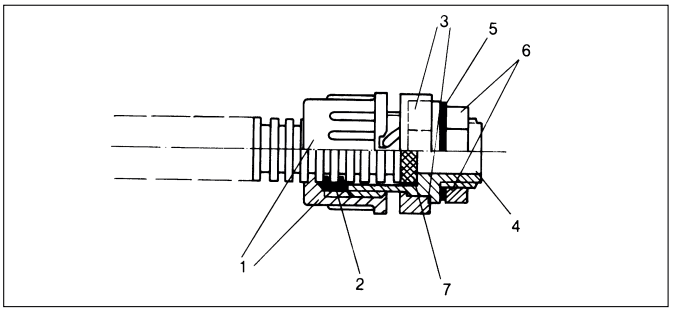

5.1

Pribor (vidi poglavlje 5.3):
- pričvrsna matica
- brtveni prsten
- zaporni prsten
- brtva za pojedinačne vodiče
- tijelo uvodnice
- brtva plosnata
- matica

Accessories (see chapter 5.3):
- Cap nut
- Clamp sealing
- Locking ring
- Single wire sealing
- Screw-in-socket
- Flat sealing
- Lock nut

rebrasta cijev NW standardni profil Corrugated tube NW normal profile	pričvrsna matica broj artikla Cap nut Art. no.	brtveni prsten broj artikla Clamp sealing Art. no.	dodatno/optional zaporni prsten broj artikla Locking ring Art. no.	dodatno/optional brtva za pojedinačne vodiče broj artikla Single wire sealing Art. no.	tijelo uvodnice broj artikla Screw-in-socket Art. no.		brtva plosnata broj artikla Flat sealing Art. no.	matica broj artikla Lock nut Art. no.
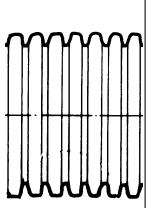	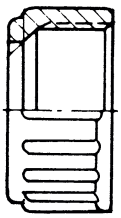	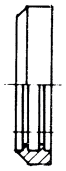	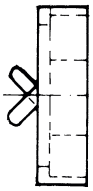	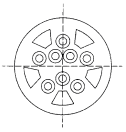	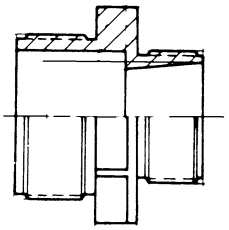			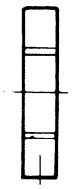
	1	2	3	7	4		5	6
8,5 *	9801324	8117080	–	8113647	9801308	–	8113017	7001096
10	9800689	8117101	8118094	8113647	9800751	9801260*	8113017	7001096
13	9800956	8117136	8118132	8113648	9800972	9801278	9805281	7001118
17	9800697	8117179	8118175	–	9800778	9800859	8113041	7001169
22	9800905	8117225	8118221	–	9800921*	9800867	8113068	7001215
23	9801251	8117233	8118221	–	9801243	–	8113068	7001215
29 *	9801138	8117292	–	–	9801189	9801286	8113010	7001290

Napomena:
* nije moguće zabravljivanje

Note:
* No locking possible

Sklopovi za montažu T-uvodnice

Assembly Packages T-Glands

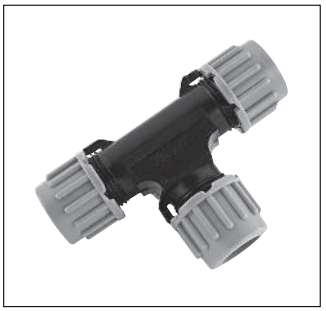

5.1

IP 67

Materijal:
Polikarbonat
Poliamid
Neopren

Radna temperatura:
-25°C do 80°C

Boje/izvedbe:
- crna/siva
- sklopovi spremni za montažu

Napomena:
A = konus mora biti usmjeren prema glavi uvodnice

Pribor (vidi poglavlje 5.3):
- pričvrsna matica
- brtveni prsten

Upotreba:
- gospodarska vozila

Material:
Polycarbonate
Polyamide
Neoprene

Temperature range:
-25°C to 80°C

Colour(s)/Designs:
- black/grey
- Assembly packages ready for installation

Note:
A = Cone must show into cap nut

Accessories (see chapter 5.3):
- Cap nut
- Clamp sealing

Applications:
- Heavy trucks

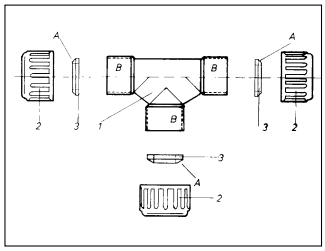

stavka Item	opis Description	B dimenzija cijevi NW B Tube size NW	C dimenzija cijevi NW C Tube size NW	boja Colour	broj artikla Art. no.	JP kom. PU pcs.
komplet **complete**	**T-uvodnica NW 10-10-10** **T-gland**	**10**		**crna/siva** **black/grey**	**7800134**	**1**
1	T - tijelo uvodnice T-fitting	10		crna black	9800719	1
2	pričvrsna matica Cap nut	10		siva grey	9800689	3
3	brtveni prsten Clamp sealing	10		crna black	8117101	3

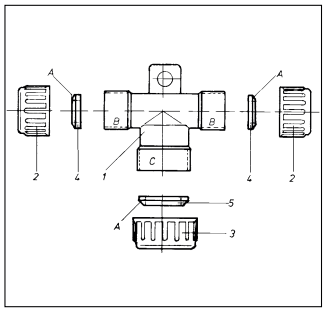

komplet **complete**	**T-uvodnica NW 10-17-10** **sa nosačem za pričvršćivanje** **T-gland with fixing-strap**	**10**	**17**	**crna/siva** **black/grey**	**7800100**	**1**
1	T - tijelo uvodnice T-fitting	10	17	crna black	9800727	1
2	pričvrsna matica Cap nut	10		siva grey	9800689	2
3	pričvrsna matica Cap nut		17	siva grey	9800697	1
4	brtveni prsten Clamp sealing	10		crna black	8117101	2
5	brtveni prsten Clamp sealing		17	crna black	8117179	1

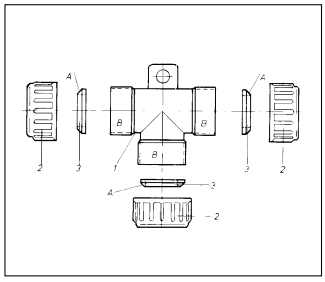

komplet **complete**	**T-uvodnica NW 17-17-17** **sa nosačem za pričvršćivanje** **T-gland with fixing-strap**	**17**		**crna/siva** **black/grey**	**7800118**	**1**
1	T - tijelo uvodnice T-fitting	17		crna black	9800760	1
2	pričvrsna matica Cap nut	17		siva grey	9800697	3
3	brtveni prsten Clamp sealing	17		crna black	8117179	3

Sklopovi za montažu T-uvodnice

Assembly Packages T-Glands

IP 67

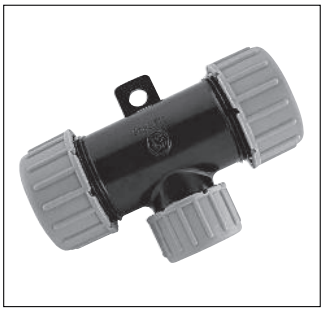

Materijal:
Polikarbonat
Poliamid
Neopren

Radna temperatura:
-25°C do 80°C

Boje/izvedbe:
- crna/siva
- sklopovi spremni za montažu

Napomena:
A = konus mora biti usmjeren prema glavi uvodnice

Pribor (vidi poglavlje 5.3) :
- pričvrsna matica
- brtveni prsten

Upotreba:
- gospodarska vozila

Material:
Polycarbonate
Polyamide
Neoprene

Temperature range:
-25°C to 80°C

Colour(s)/Designs:
- black/grey
- Assembly packages ready for installation

Note:
A = Cone must show into cap nut

Accessories (see chapter 5.3):
- Cap nut
- Clamp sealing

Applications:
- Heavy trucks

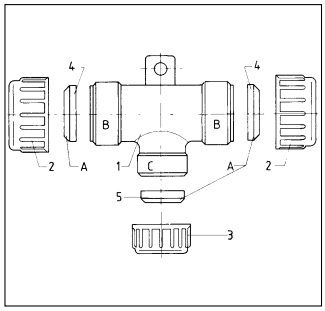

stavka Item	opis Description	B NW B NW	C NW C NW	boja Colour	broj artikla Art. no.	JP kom. PU pcs.
komplet **complete**	**T-uvodnica NW 22-17-22 sa nosačem za pričvršćivanje** **T-gland with fixing-strap**	**22**	**17**	**crna/siva** **black/grey**	**7800096**	**1**
1	T - tijelo uvodnice T-fitting	22	17	crna black	9800700	1
2	pričvrsna matica Cap nut	22		siva grey	9800905	2
3	pričvrsna matica Cap nut		17	siva grey	9800697	1
4	brtveni prsten Clamp sealing	22		crna black	8117225	2
5	brtveni prsten Clamp sealing		17	crna black	8117179	1

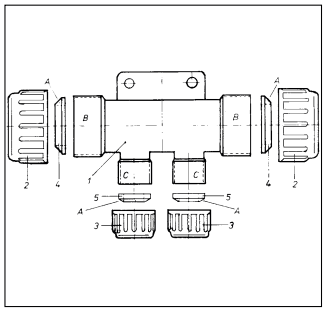

komplet **complete**	**T-uvodnica NW 22-10-10-22 22 sa nosačem za pričvršćivanje** **T-gland with fixing-strap**		**10**	**crna/siva** **black/grey**	**7800126**	**1**
1	T - tijelo uvodnice T-fitting	22	10	crna black	9800735	1
2	pričvrsna matica Cap nut	22		siva grey	9800905	2
3	pričvrsna matica Cap nut		10	siva grey	9800689	2
4	brtveni prsten Clamp sealing	22		crna black	8117225	2
5	brtveni prsten Clamp sealing		10	crna black	8117101	2

Sklopovi za montažu Redukcije za T-uvodnice NW 17 i NW 22

Assembly Packages Reducers for T-Gland NW 17 and NW 22

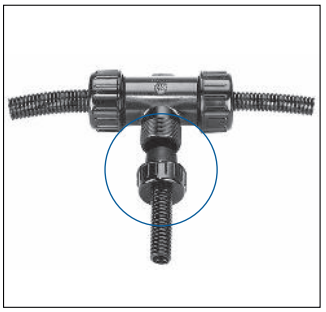

IP 67

Materijal:
Elastomer
Poliamid

Radna temperatura:
-25°C do 80°C

Boje/izvedbe:
- crna

Svojstva:
- sastoji se od brtve i glave uvodnice

- odgovarajuće za T-uvodnice
  10-17-10
  22-17-22
  17-17-17
  22-10-10-22

Pribor:
- brtva
- pričvrsna matica

Upotreba:
- gospodarska vozila

Material:
Elastomere
Polyamide

Temperature range:
-25°C to 80°C

Colour(s)/Designs:
- black

Characteristics:
- consisting of sealing and cap nut

- suitable for T-glands
  10-17-10
  22-17-22
  17-17-17
  22-10-10-22

Accessories:
- Sealing
- Cap nut

Applications:
- Heavy trucks

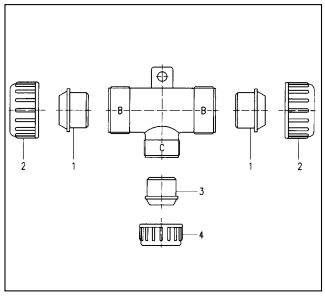

stavka Item	opis Description	B NW B NW	C NW C NW	redukcija za NW reducing for NW	boja Colour	broj artikla Art. no.	JP kom. PU pcs.
1	brtva Sealing	22		10 13 17	crna black	8115532 8115531 8115530	100
2	pričvrsna matica Cap nut	22		10 13 17	crna black	9801702 9801701 9801700	100
3	brtva Sealing		17	10 13	crna black	8115541 8115540	100
4	pričvrsna matica Cap nut		17	10 13	crna black	9801704 9801703	100

Sklopovi za montažu Spojne uvodnice

Assembly Packages Connection Glands

5.1

IP 67

Materijal:
Poliamid
Polikarbonat
Neopren

Radna temperatura:
-25°C do 80°C

Boje/izvedbe:
- siva/crna
- sklopovi spremni za montažu

Napomena:
A = konus mora biti usmjeren prema glavi uvodnice

Pribor (vidi poglavlje 5.3):
- tijelo uvodnice
- pričvrsna matica
- brtveni prsten
- brtva plosnata
- matica

Upotreba:
- gospodarska vozila
- za spajanje rebrastih cijevi, npr. na šasije vozila

Material:
Polyamide
Polycarbonate
Neoprene

Temperature range:
-25°C to 80°C

Colour(s)/Designs:
- grey/black
- Assembly packages ready for installation

Note:
A = Cone must show into cap nut

Accessories (see chapter 5.3):
- Screw-in-socket
- Cap nut
- Clamp sealing
- Flat sealing
- Lock nut

Applications:
- Heavy trucks
- For connection of corrugated tubes, e. g. on housing

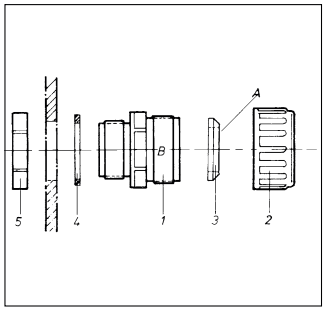

stavka Item	opis Description	B NW B NW	boja kom. Colour pcs.	broj artikla Art. no.	JP PU
komplet **complete**	**spojna uvodnica** **Connection gland**	**10**	**siva** **grey**	**7800002**	**1**
1	tijelo uvodnice/Screw-in-socket	10	siva/ grey	9800751	1
2	pričvrsna matica/Cap nut	10	siva/ grey	9800689	1
3	brtveni prsten/Clamp sealing	10	crna/ black	8117101	1
4	brtva plosnata/Flat sealing	10	crna/ black	8113017	1
5	matica/Lock nut	10	siva/ grey	7001096	1
komplet **complete**	**spojna uvodnica** **Connection gland**	**12/13**	**siva** **grey**	**7800045**	**1**
1	tijelo uvodnice/Screw-in-socket	12/13	siva/ grey	9800972	1
2	pričvrsna matica/Cap nut	12/13	siva/ grey	9800956	1
3	brtveni prsten/Clamp sealing	12/13	crna/ black	8117136	1
4	brtva plosnata/Flat sealing	12/13	crna/ black	9805281	1
5	matica/Lock nut	12/13	siva/ grey	7001118	1
komplet **complete**	**spojna uvodnica** **Connection gland**	**17**	**siva** **grey**	**7800010**	**1**
1	tijelo uvodnice/Screw-in-socket	17	siva/ grey	9800859	1
2	pričvrsna matica/Cap nut	17	siva/ grey	9800697	1
3	brtveni prsten/Clamp sealing	17	crna/ black	8117179	1
4	brtva plosnata/Flat sealing	17	crna/ black	8113041	1
5	matica/Lock nut	17	siva/ grey	7001169	1
komplet **complete**	**spojna uvodnica** **Connection gland**	**22**	**siva** **grey**	**7800029**	**1**
1	tijelo uvodnice/Screw-in-socket	22	siva/ grey	9800867	1
2	pričvrsna matica/Cap nut	22	siva/ grey	9800905	1
3	brtveni prsten/Clamp sealing	22	crna/ black	8117225	1
4	brtva plosnata/Flat sealing	22	crna/ black	8113068	1
5	matica/Lock nut	22	siva/ grey	7001215	1

Sklopovi za montažu Spojne uvodnice

Assembly Packages Connection Glands

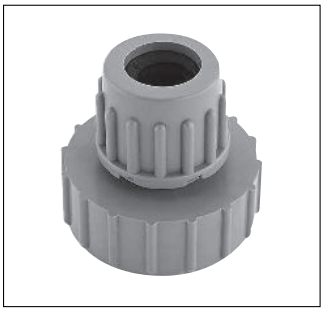

IP 67

Materijal:
Poliamid
Neopren

Radna temperatura:
-25°C do 80°C

Boje/izvedbe:
- siva/crna
- sklopovi spremni za montažu

Napomena:
A = konus mora biti usmjeren prema glavi uvodnice

Pribor (vidi poglavlje 5.3):
- tijelo uvodnice
- pričvrsna matica
- brtveni prsten
- brtva plosnata

Upotreba:
- gospodarska vozila
- za spajanje rebrastih cijevi, npr. na šasije vozila

Material:
Polyamide
Neoprene

Temperature range:
-25°C to 80°C

Colour(s)/Designs:
- grey/black
- Assembly packages ready for installation

Note:
A = Cone must show into cap nut

Accessories (see chapter 5.3):
- Transition piece
- Cap nut
- Clamp sealing
- Flat sealing

Applications:
- Heavy trucks
- For connection of corrugated tubes, e. g. on housing

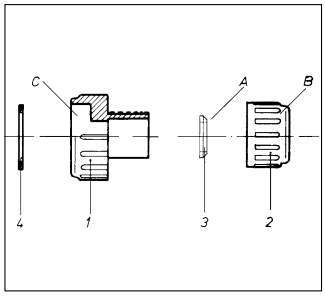

stavka Item	opis Description	B NW B NW	C spojni navoj C Thread	boja Colour	broj artikla Art. no.	JP kom. PU pcs.
komplet **complete**	**spojna uvodnica s unutarnjim navojem za VG-utikač oblika E i H** **Connection gland with internal thread for VG-plug Form E and H**	**10**	**1"-20 UNEF-2B**	**siva** **grey**	**7800207**	**1**
1	tijelo uvodnice Transition piece		1"-20 UNEF-2B	siva grey	9801014	1
2	pričvrsna matica Cap nut	10		siva grey	9800689	1
3	brtveni prsten Clamp sealing	10		crna black	8117101	1
4	brtva plosnata Flat sealing	10		crna black	8113084	1

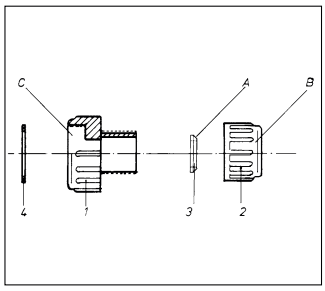

komplet **complete**	**spojna uvodnica s unutarnjim navojem za VG-utikač oblika E i H** **Connection gland with internal thread for VG-plug Form E and H**	**10**	**7/8"-20 UNEF-2B**	**siva** **grey**	**7800240**	**1**
1	tijelo uvodnice Transition piece		7/8"-20 UNEF-2B	siva grey	9801022	1
2	pričvrsna matica Cap nut	10		siva grey	9800689	1
3	brtveni prsten Clamp sealing	10		crna black	8117101	1
4	brtva plosnata Flat sealing	10		crna black	8113092	1

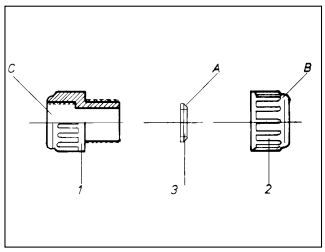

komplet **complete**	**spojna uvodnica s unutarnjim navojem za VG-utikač oblika E i H** **Connection gland with internal thread for VG-plug Form E and H**	**10**	**5/8"-24 UNEF 2B**	**siva** **grey**	**7800258**	**1**
1	tijelo uvodnice Transition piece		5/8"-24 UNEF 2B	siva grey	9801006	1
2	pričvrsna matica Cap nut	10		siva grey	9800689	1
3	brtveni prsten Clamp sealing	10		crna black	8117101	1

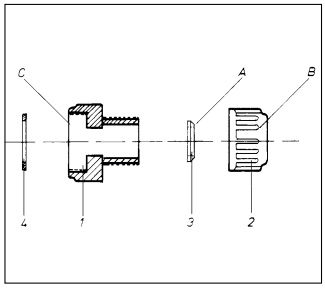

komplet **complete**	**spojna uvodnica s unutarnjim navojem za VG-utikač oblika E i H** **Connection gland with internal thread for VG-plug Form E and H**	**10**	**1 3/16"-18 UNEF-2B**	**siva** **grey**	**7800312**	**1**
1	tijelo uvodnice Transition piece		1 3/16"-18 UNEF-2B	siva grey	9801170	1
2	pričvrsna matica Cap nut	10		siva grey	9800689	1
3	brtveni prsten Clamp sealing	10		crna black	8117101	1
4	brtva plosnata Flat sealing	10		crna black	8113041	1

Sklopovi za montažu Spojne uvodnice

Assembly Packages Connection Glands

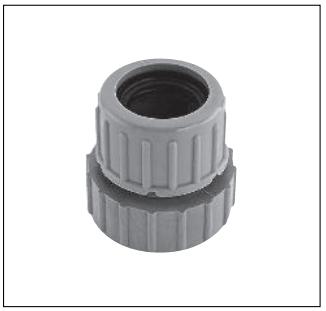

5.1

IP 67

Materijal:
Poliamid
Neopren

Radna temperatura:
-25°C do 80°C

Boje/izvedbe:
- siva/crna
- sklopovi spremni za montažu

Napomena:
A = konus mora biti usmjeren prema glavi uvodnice

Pribor (vidi poglavlje 5.3):
- tijelo uvodnice
- pričvrsna matica
- brtveni prsten
- brtva plosnata

Upotreba:
- gospodarska vozila
- za spajanje rebrastih cijevi, npr. na šasije vozila

Material:
Polyamide
Neoprene

Temperature range:
-25°C to 80°C

Colour(s)/Designs:
- grey/black
- Assembly packages ready for installation

Note:
A = Cone must show into cap nut

Accessories (see chapter 5.3):
- Transition piece
- Cap nut
- Clamp sealing
- Flat sealing

Applications:
- Heavy trucks
- For connection of corrugated tubes, e. g. on housing

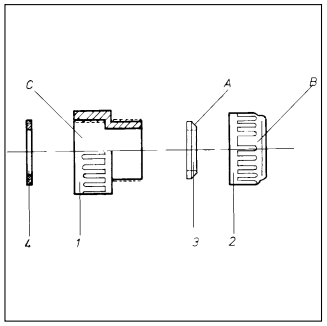

stavka Item	opis Description	B NW B NW	C spojni navoj C Thread	boja Colour	broj artikla Art. no.	JP kom. PU pcs.
komplet **complete**	**spojna uvodnica s unutarnjim navojem za VG-utikač oblika E i H** **Connection gland with internal thread for VG-plug Form E and H**	**17**	**1 3/16"-18 UNEF-2B**	**siva** **grey**	**7800231**	**1**
1	tijelo uvodnice Transition piece		1 3/16"-18 UNEF-2B	siva grey	9801049	1
2	pričvrsna matica Cap nut	17		siva grey	9800697	1
3	brtveni prsten Clamp sealing	17		crna black	8117179	1
4	brtva plosnata Flat sealing	17		crna black	8113041	1

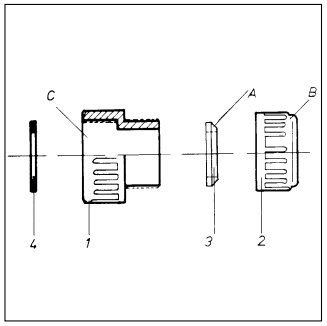

komplet **complete**	**spojna uvodnica s unutarnjim navojem za VG-utikač oblika E i H** **Connection gland with internal thread for VG-plug Form E and H**	**17**	**1"-20 UNEF-2B**	**siva** **grey**	**7800215**	**1**
1	tijelo uvodnice Transition piece		1"-20 UNEF-2B	siva grey	9801030	1
2	pričvrsna matica Cap nut	17		siva grey	9800697	1
3	brtveni prsten Clamp sealing	17		crna black	8117179	1
4	brtva plosnata Flat sealing	17		crna black	8113084	1

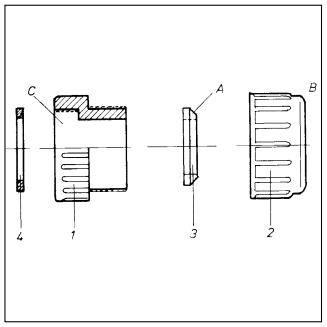

komplet **complete**	**spojna uvodnica s unutarnjim navojem za VG-utikač oblika E i H** **Connection gland with internal thread for VG-plug Form E and H**	**22**	**1 7/16" UNEF-2B**	**siva** **grey**	**7800223**	**1**
1	tijelo uvodnice Transition piece		1 7/16" UNEF-2B	siva grey	9801057	1
2	pričvrsna matica Cap nut	22		siva grey	9800905	1
3	brtveni prsten Clamp sealing	22		crna black	8117225	1
4	brtva plosnata Flat sealing	22		crna black	8113050	1

Sklopovi za montažu Proširenja

Assembly Packages Enlargements

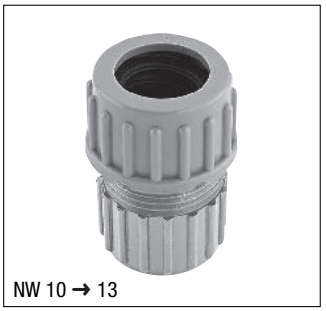
NW 10 ➔ 13

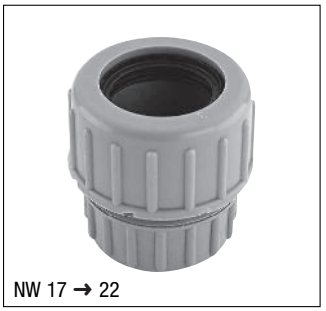
NW 17 ➔ 22

IP 67

Materijal:
Poliamid
Neopren

Radna temperatura:
-25°C do 80°C

Boje/izvedbe:
- siva/crna
- sklopovi spremni za montažu

Napomena:
A = konus mora biti usmjeren prema glavi uvodnice

Pribor (vidi poglavlje 5.3):
- tijelo uvodnice
- pričvrsna matica
- brtveni prsten

Upotreba:
- gospodarska vozila

Material:
Polyamide
Neoprene

Temperature range:
-25°C to 80°C

Colour(s)/Designs:
- grey/black
- Assembly packages ready for installation

Note:
A = Cone must show into cap nut

Accessories (see chapter 5.3):
- Transition piece
- Cap nut
- Clamp sealing

Applications:
- Heavy trucks

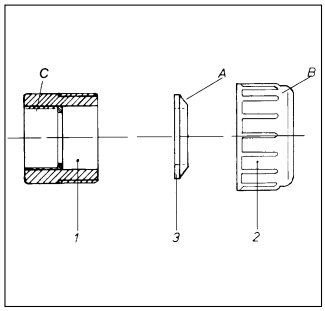

stavka Item	opis Description	B dimenzija cijevi NW B tube size NW	C odgovara za C fits for	boja Colour	broj artikla Art. no.	JP kom. PU pcs.
komplet **complete**	**proširenje NW 10→13** **Enlargement NW 10→13**	**13**	T-uvodnica br. art. 7800134 (10-10-10) br. art. 7800100 (10-10-17) br. art. 7800126 (22-22-10-10) T-gland Art. no. 7800134 (10-10-10) Art. no. 7800100 (10-10-17) Art. no. 7800126 (22-22-10-10)	**siva** **grey**	**7800061**	**1**
1	tijelo uvodnice PG 11/21,8x1,41 Transition piece			siva grey	9801120	1
2	pričvrsna matica Cap nut	13		siva grey	9800956	1
3	brtveni prsten Clamp sealing	13		crna black	8117136	1

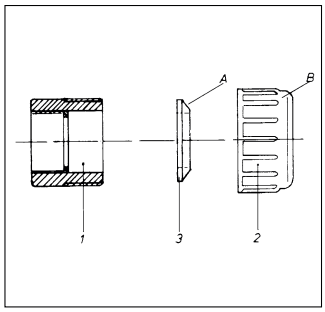

komplet **complete**	**proširenje NW 17→22** **Enlargement NW 17→22**	**22**	T-uvodnica br. art. 7800100 (10-10-17) br. art. 7800118 (17-17-17) T-gland Art. no. 7800100 (10-10-17) Art. no. 7800118 (17-17-17)	**siva** **grey**	**7800282**	**1**
1	tijelo uvodnice 26,2x1,41/M35x1,75 Transition piece			siva grey	9801162	1
2	pričvrsna matica Cap nut	22		siva grey	9800905	1
3	brtveni prsten Clamp sealing	22		crna black	8117225	1

Sklopovi za montažu Redukcije

Assembly Packages Reducers

IP 67

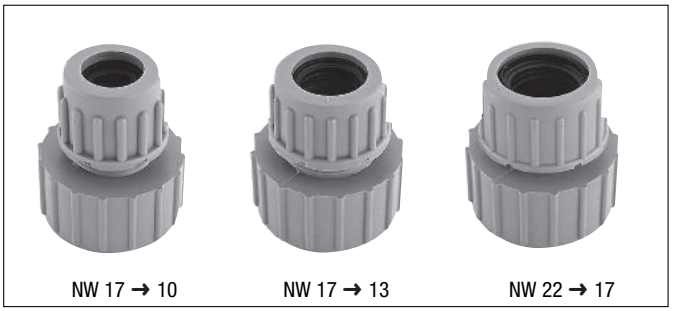

Materijal:
Poliamid
Neopren

Radna temperatura:
-25°C do 80°C

Boje/izvedbe:
- siva/crna
- sklopovi spremni za montažu

Napomena:
A = konus mora biti usmjeren prema glavi uvodnice

Pribor (vidi poglavlje 5.3):
- tijelo uvodnice
- pričvrsna matica
- brtveni prsten
- brtva plosnata

Upotreba:
- gospodarska vozila

Material:
Polyamide
Neoprene

Temperature range:
-25°C to 80°C

Colour(s)/Designs:
- grey/black
- Assembly packages ready for installation

Note:
A = Cone must show into cap nut

Accessories (see chapter 5.3):
- Transition piece
- Cap nut
- Clamp sealing
- Flat sealing

Applications:
- Heavy trucks

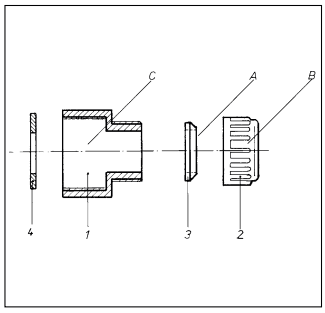

stavka Item	opis Description	B NW B NW	C odgovara za C fits for	boja Colour	broj artikla Art. no.	JP kom. PU pcs.
komplet **complete**	**Redukcija NW 17→10** **Reducer NW 17→10**	**10**	T-uvodnica br. art. 7800100 (10-10-17) br. art. 7800118 (17-17-17) br. art. 7800096 (22-17-22) T-gland Art. no. 7800100 (10-10-17) Art. no. 7800118 (17-17-17) Art. no. 7800096 (22-17-22)	**siva** **grey**	**7800274**	**1**
1	tijelo uvodnice PG 11/21,2x1,41 Transition piece			siva grey	9801090	1
2	pričvrsna matica Cap nut	10		siva grey	9800689	1
3	brtveni prsten Clamp sealing	10		crna black	8117101	1
4	brtva plosnata Flat sealing			crna black	8113327	1

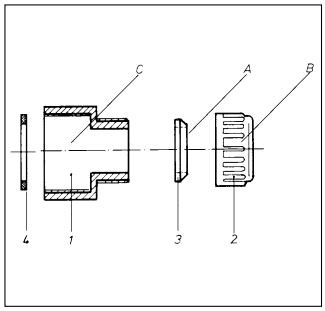

komplet **complete**	**Redukcija NW 17→13** **Reducer NW 17→13**	**13**	T-uvodnica br. art. 7800100 (10-10-17) br. art. 7800118 (17-17-17) br. art. 7800096 (22-17-22) T-gland Art. no. 7800100 (10-10-17) Art. no. 7800118 (17-17-17) Art. no. 7800096 (22-17-22)	**siva** **grey**	**7800053**	**1**
1	tijelo uvodnice 26,2x1,41/M35x1,75 Transition piece			siva grey	9801103	1
2	pričvrsna matica Cap nut	13		siva grey	9800956	1
3	brtveni prsten Clamp sealing	13		crna black	8117136	1
4	brtva plosnata Flat sealing			crna black	8113327	1

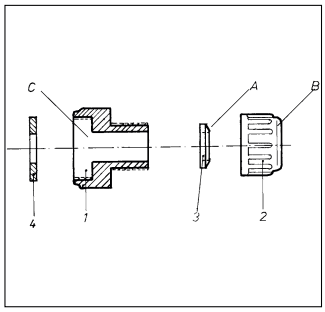

komplet **complete**	**Redukcija NW 22→17** **Reducer NW 22→17**	**17**	T-uvodnica br. art. 7800126 (22-22-10-10) br. art. 7800096 (22-17-22) T-gland Art. no. 7800126 (22-22-10-10) Art. no. 7800096 (22-17-22)	**siva** **grey**	**7800266**	**1**
1	tijelo uvodnice 26,2x1,41/M35x1,75 Transition piece			siva grey	9801081	1
2	pričvrsna matica Cap nut	17		siva grey	9800697	1
3	brtveni prsten Clamp sealing	17		crna black	8117179	1
4	brtva plosnata Flat sealing			crna black	8113319	1

Sklopovi za montažu Spojne uvodnice za konektore na cisternama

Assembly Packages Connection Glands for Tanker Connectors

IP 67

Materijal:
Poliamid
Neopren

Radna temperatura:
-25°C do 80°C

Boje/izvedbe:
- siva/crna
- sklopovi spremni za montažu

Napomena:
A = konus mora biti usmjeren prema glavi uvodnice

Pribor (vidi poglavlje 5.3):
- tijelo uvodnice
- pričvrsna matica
- brtveni prsten
- brtva plosnata

Upotreba:
- gospodarska vozila
- za konektore rezervoara goriva

Material:
Polyamide
Neoprene

Temperature range:
-25°C to 80°C

Colour(s)/Designs:
- grey/black
- Assembly packages ready for installation

Note:
A = Cone must show into cap nut

Accessories (see chapter 5.3):
- Screw-in-socket
- Cap nut
- Clamp sealing
- Flat sealing

Applications:
- Heavy trucks
- for fuel sockets

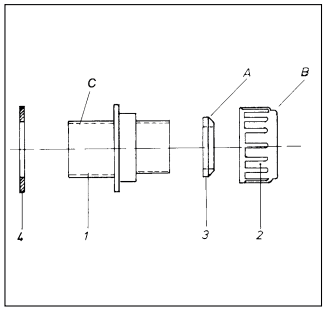

stavka Item	opis Description	B NW B NW	C odgovara za C fits for	boja Colour	broj artikla Art. no.	JP kom. PU pcs.
komplet **complete**	**spojna uvodnica** **Connection gland**	**17**	9-pol. priključnica broj artikla 7800436 i utikač broj artikla 7800444 (priključnica i utikač na upit) 9-pol. Socket Art. no. 7800436 and plug Art. no. 7800444 (Socket and plug on request)	**siva** **grey**	**7800304**	**1**
1	tijelo uvodnice Screw-in-socket	17		siva grey	9801065	1
2	pričvrsna matica Cap nut	17		siva grey	9800697	1
3	brtveni prsten Clamp sealing	17		crna black	8117179	1
4	brtva plosnata Flat sealing	17		crna black	8113050	1

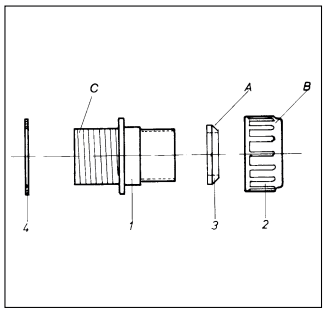

komplet **complete**	**spojna uvodnica** **Connection gland**	**17**	13-pol. priključnica broj artikla 7800452 i utikač broj artikla 7800460 (priključnica i utikač na upit) 13-pol. Socket Art. no. 7800452 and plug Art. no. 7800460 (Socket and plug on request)	**siva** **grey**	**7800290**	**1**
1	tijelo uvodnice Screw-in-socket			siva grey	9801073	1
2	pričvrsna matica Cap nut	17		siva grey	9800697	1
3	brtveni prsten Clamp sealing	17		crna black	8117179	1
4	brtva plosnata Flat sealing	17		crna black	8113010	1

5.1

ADR-GGVS
konektori + ABS kabeli

ADR-GGVS
Connectors + ABS Conduits

	stranica		page
„Odgovara za SEAL" konektore (sa brtvljenim kontaktima)		**"Suitable for SEAL" Connectors**	
4-polni – ravni / kutni	16	4-pole – straight / angle	16
4-polni – utikač bez zaštitne kape	17	4-pole – Plug without protection cap	17
5-polni – ravna	18	5-pole – straight	18
5-polni – kutna	19	5-pole – angle	19
8-polni – utikač	20	8-pole – Plug	20
8-polni – priključnica za prirubnicu	21	8-pole – Socket for flange assembly	21
8-polni – priključnica za rebrastu cijev	22	8-pole – Socket for corrugated tube	22
16-polni – utikač/priključnica	23 - 24	16-pole – Plug/Socket	23 - 24
35-polni – utikač/priključnica	25 - 26	35-pole – Plug/Socket	25 - 26
37-polni – utikač	27	37-pole – Plug	27
Kontakti/brtve/alati za SEAL-konektore	28 - 29	**Contacts/SEALS/Tools for SEAL Connectors**	28 - 29
„Ne odgovara za SEAL" konektore (sa brtvljenim kontaktima)		**„Not suitable for SEAL" Connectors**	
3-polni	30	3-pole	30
5-polni	31	5-pole	31
8-polni – za prirubnicu	32	8-pole – for flange assembly	32
8-polni – za montažu na rebrastu cijev	33	8-pole – for corrugated tube assembly	33
16-polni – utikač/priključnica	34 - 35	16-pole – Plug/Socket	34 - 35
21-polni – utikač/priključnica	36 - 37	21-pole – Plug/Socket	36 - 37
37-polni – utikač/priključnica	38 - 39	37-pole – Plug/Socket	38 - 39
utični/natični kontakti	40	**Pin-/Jack contacts**	40
Alati	41	**Tools**	41
Specijalni konektori		**Special Connectors**	
3-polni	42	3-pole	42
3-polni – sklopovi za montažu	43	3-pole – Assembly packages	43
2-/3-polni – s navojem M 24 x 1	44	2-/3-pole – with thread M 24 x 1	44
2-/3-/4-polni – s navojem M 27 x 1	45	2-/3-/4-pole – with thread M 27 x 1	45
2-/3-/4-polni – s bajonetom	46	2-/3-/4-pole – with bayonet	46
Brtve za specijalne konektore	47	**Sealings for Special Connectors**	47
ABS/EBS-konektori i kabeli		**ABS/EBS-Connectors & Conduits**	
ABS/EBS/15-pol. konektor + ABS-parking priključnica	48	ABS/EBS/15-pole connectors + ABS-Parking socket	48
Zamjenski kontakti	49	Replacement contacts	49
ABS/EBS/15-pol. spiralni kabel	50	ABS/EBS/15-pole conduits	50

4-polni utikač

SEAL (brtvljeni kontakt)

4-pole Plug

SEAL

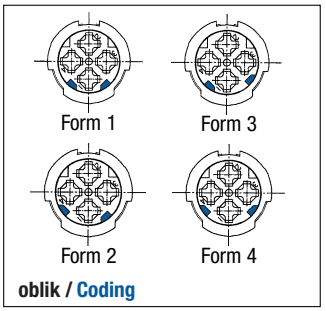

IP 67

5.2

Materijal:
Polibutilenteraftalat
Poliamid
Silikon

Radna temperatura:
-40°C do 125°C

Gorivost:
UL 94: HB

Boje/izvedbe:
- Boje: vidi tabelu
- bez/sa kompenzacijom tlaka

Svojstva:
- prema ISO 15170 (prijašnji DIN 72585)
- spojni sistem: Ø 2,5 mm

Pribor (vidi poglavlje…) :
- kontakti (5.2)
- brtve (5.2)
- alati (5.2)
- obujmice za zaštitu vodiča (5.3) dodatno

Upotreba:
- gospodarska vozila
- poljoprivredni strojevi
- građevinski strojevi
- odgovara za rebraste cijevi NW 8,5 i NW 4,5

Material:
Polybuthyleneterephtalate
Polyamide
Silicone

Temperature range:
-40°C to 125°C

Flammability:
UL 94: HB

Colour(s)/Designs:
- Colours: s. table
- without/with pressure compensation

Characteristics:
- Acc. to ISO15170 (former DIN 72585)
- Contact system: Ø 2,5 mm

Accessories (see chapter…):
- Contacts (5.2)
- Seals (5.2)
- Tools (5.2)
- Secondary lock (5.3) optional

Applications:
- Heavy trucks
- Agricultural machines
- Construction machines
- Suitable for corrugated tubes NW 8,5 and NW 4,5

ravni/straight

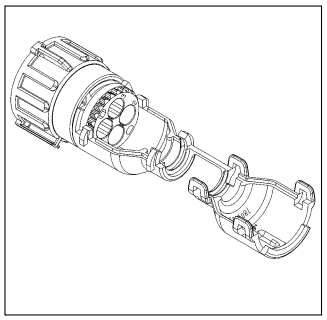

kutni/angle

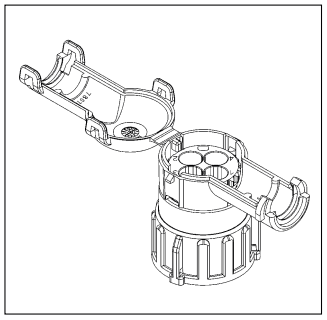

oblik Coding Form	Izvedba Design	boja natično kućište Colour Jack housing	boja bajonet matica Colour Bayonet nut	broj artikla Art. no.	JP kom. PU pcs.
za rebrastu cijev NW 8,5 / for corrugated tube NW 8,5					
1	bez kompenzacije tlaka / without pressure compensation	crna / black	crna / black	9800350	100
	sa kompenzacijom tlaka / with pressure compensation	crna/black	siva/grey	9800340	100
2	bez kompenzacije tlaka / without pressure compensation	siva/grey	crna / black	9800351	100
	sa kompenzacijom tlaka / with pressure compensation	siva/grey	siva/grey	9800341	100
3	bez kompenzacije tlaka / without pressure compensation	zelena / green	crna / black	9800352	100
	sa kompenzacijom tlaka / with pressure compensation	zelena / green	siva/grey	9800342	100
4	bez kompenzacije tlaka / without pressure compensation	plava / blue	crna / black	9800353	100
	sa kompenzacijom tlaka / with pressure compensation	plava / blue	siva/grey	9800343	100
za rebrastu cijev NW 4,5 / for corrugated tube NW 4,5					
1	bez kompenzacije tlaka / without pressure compensation	crna / black	crna / black	9800374	100
	sa kompenzacijom tlaka / with pressure compensation	crna / black	siva/grey	9800384	100
2	bez kompenzacije tlaka / without pressure compensation	siva / grey	crna / black	9800375	100
	sa kompenzacijom tlaka / with pressure compensation	siva / grey	siva/ grey	9800385	100
3	bez kompenzacije tlaka/ without pressure compensation	zelena / green	crna / black	9800376	100
	sa kompenzacijom tlaka / with pressure compensation	zelena / green	siva/grey	9800386	100
4	bez kompenzacije tlaka / without pressure compensation	plava / blue	crna / black	9800377	100
	sa kompenzacijom tlaka / with pressure compensation	plava / blue	siva/grey	9800387	100
za rebrastu cijev NW 8,5 / for corrugated tube NW 8,5					
1	bez kompenzacije tlaka / without pressure compensation	crna / black	crna / black	9800330	100
	sa kompenzacijom tlaka / with pressure compensation	crna / black	siva/grey	9800320	100
2	bez kompenzacije tlaka / without pressure compensation	siva / grey	crna / black	9800331	100
	sa kompenzacijom tlaka / with pressure compensation	siva / grey	siva/grey	9800321	100
3	bez kompenzacije tlaka / without pressure compensation	zelena / green	crna / black	9800332	100
	sa kompenzacijom tlaka / with pressure compensation	zelena / green	siva/grey	9800322	100
4	bez kompenzacije tlaka / without pressure compensation	plava / blue	crna / black	9800333	100
	sa kompenzacijom tlaka / with pressure compensation	plava / blue	siva/grey	9800323	100

4-polni utikač

SEAL (brtvljeni kontakt) bez zaštitne kape

4-pole Plug

SEAL without protection cap

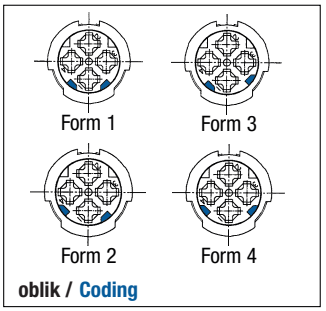

IP 67

Materijal:
Polibutilenteraftalat
Poliamid
Silikon

Radna temperatura:
-40°C do 125°C

Gorivost:
UL 94: HB

Boje/izvedbe:
- Boje: vidi tabelu
- bez/sa kompenzacijom tlaka

Svojstva:
- prema ISO 15170 (prijašnji DIN 72585)
- spojni sistem: Ø 2,5 mm

Pribor (vidi poglavlje…) :
- kontakti (5.2)
- brtve (5.2)
- alati (5.2)
- obujmice za zaštitu vodiča (5.3) dodatno

Upotreba:
- gospodarska vozila
- poljoprivredni strojevi
- građevinski strojevi

Material:
Polybuthyleneterephtalate
Polyamide
Silicone

Temperature range:
-40°C to 125°C

Flammability:
UL 94: HB

Colour(s)/Designs:
- Colours: s. table
- no/with pressure compensation

Characteristics:
- Acc. to ISO 15170 (former DIN 72585)
- Contact system: Ø 2,5 mm

Accessories (see chapter…):
- Contacts (5.2)
- Seals (5.2)
- Tools (5.2)
- Secondary lock (5.3) optional

Applications:
- Heavy trucks
- Agricultural machines
- Construction machines

5.2

utikač/Plug

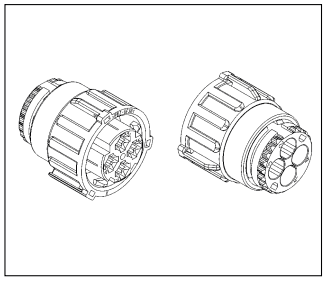

oblik Coding Form	Izvedba Design	boja natično kućište Colour Jack housing	boja bajonet matica Colour Bayonet nut	broj artikla Art. no.	JP kom. PU pcs.
1	bez kompenzacije tlaka / without pressure compensation	crna / black	crna / black	9800310	100
	sa kompenzacijom tlaka / with pressure compensation	crna / black	siva / grey	9800300	100
2	bez kompenzacije tlaka / without pressure compensation	siva / grey	crna / black	9800311	100
	sa kompenzacijom tlaka / with pressure compensation	siva / grey	siva / grey	9800301	100
3	bez kompenzacije tlaka / without pressure compensation	zelena / green	crna / black	9800312	100
	sa kompenzacijom tlaka / with pressure compensation	zelena / green	siva / grey	9800302	100
4	bez kompenzacije tlaka / without pressure compensation	plava / blue	crna / black	9800313	100
	sa kompenzacijom tlaka / with pressure compensation	plava / blue	siva / grey	9800303	100

opis Description	za for	broj artikla Art. no.
prijelaz ravni / Adaptor straight	NW 4,5	7807666
	NW 8,5	7807665
	NW 10	7807263
slijepa brtva za 4-polni utikač / Blind plug for 4-pole plug		7807678

5-polni konektor

SEAL (brtvljeni kontakt) ravni

5-pole Connector

SEAL Straight

IP 67

utično kućište
Pin housing

natično kućište
Jack housing

Materijal:
Poliamid 6/66
Perbunan

Radna temperatura:
-40°C do 105°C
Kada se koristi sa priborom treba uzeti u obzir podatke o radnoj temperaturi pribora

Boje/izvedbe:
- crna/siva
- sklopovi za montažu od 100 kom na upit

Svojstva:
- spojni sistem: Ø 1,6 mm

Pribor (vidi poglavlje…) :
- kontakti (5.2)
- brtve (5.2)
- alati (5.2)
- obujmice za zaštitu vodiča (5.3) dodatno

Upotreba:
- gospodarska vozila
- poljoprivredni strojevi
- građevinski strojevi

Material:
Polyamide 6/66
Perbunan

Temperature range:
-40°C to 105°C
When used with accessories please mind the respective accessory temperature data.

Colour(s)/Designs:
- black/grey
- Assembly packages from 100 pcs on request

Characteristics:
- Contact system: Ø 1,6 mm

Accessories (see chapter…):
- Contacts (5.2)
- Seals (5.2)
- Tools (5.2)
- Secondary lock (5.3) optional

Applications:
- Heavy trucks
- Agricultural machines
- Construction machines

5.2

opis Description		za for	boja Colour	materijal Material	broj artikla Art. no.	JP kom. PU pcs.
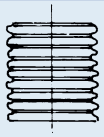	rebrasta cijev Corrugated tube	NW 8,5 NW 10				
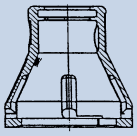	ravna zaštitna kapa Straight protection cap	NW 8,5	crna black	Poliamid 66 Polyamide 66	7807665	50
		NW 10			7807263	50
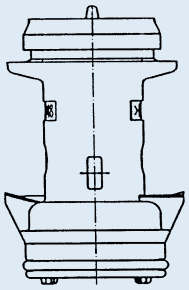	5-pol. utično kućište 5-pole pin housing	za kontakt for contact Ø 1,6 mm	crna black	Poliamid 6 Perbunan Polyamide 6 Perbunan	7806248	50
			siva grey	Poliamid 6 Perbunan Polyamide 6 Perbunan	7806249	50
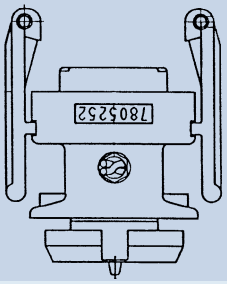	5-pol. natično kućište 5-pole jack housing	za kontakt for contact Ø 1,6 mm	crna black	Poliamid 6 Polyamide 6	7805252	50
			siva grey	Poliamid 6 Polyamide 6	7805253	50
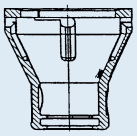	ravna zaštitna kapa Straight protection cap	NW 8,5	crna black	Poliamid 66 Polyamide 66	7807665	50
		NW 10			7807263	50
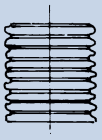	rebrasta cijev Corrugated tube	NW 8,5 NW 10				

5-polni konektor

SEAL (brtvljeni kontakt) kutni

5-pole Connector

SEAL Angle

utično kućište
Pin housing

natično kućište
Jack housing

IP 67

Materijal:
Poliamid 6
Perbunan

Radna temperatura:
-40°C do 105°C
Kada se koristi sa priborom treba uzeti u obzir podatke o radnoj temperaturi pribora

Boje/izvedbe:
- crna
- sklopovi za montažu od 100 komada na upit

Svojstva:
- spojni sistem: Ø 1,6 mm

Pribor (vidi poglavlje…) :
- kontakti (5.2)
- brtve (5.2)
- alati (5.2)
- obujmice za zaštitu vodiča (5.3) dodatno

Upotreba:
- gospodarska vozila
- poljoprivredni strojevi
- građevinski strojevi

Material:
Polyamide 6
Perbunan

Temperature range:
-40°C to 105°C
When used with accessories please mind the respective accessory temperature data.

Colour(s)/Designs:
- black
- Assembly packages from 100 pcs on request

Characteristics:
- Contact system: Ø 1,6 mm

Accessories (see chapter…):
- Contacts (5.2)
- Seals (5.2)
- Tools (5.2)
- Secondary lock (5.3) optional

Applications:
- Heavy trucks
- Agricultural machines
- Construction machines

5.2

opis Description	za for	boja Colour	materijal Material	broj artikla Art. no.	JP kom. PU pcs.
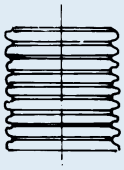 rebrasta cijev Corrugated tube	NW 8,5 NW 10				
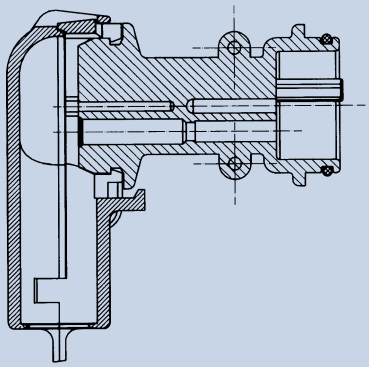 5-pol. utično kućište sa kutnom zaštitnom kapom 5-pole pin housing with angle protection cap	za kontakt for contact Ø 1,6 mm NW 8,5	crna black	Poliamid 6 Perbunan	7806252	50
	NW 10		Polyamide 6 Perbunan	7806053	50
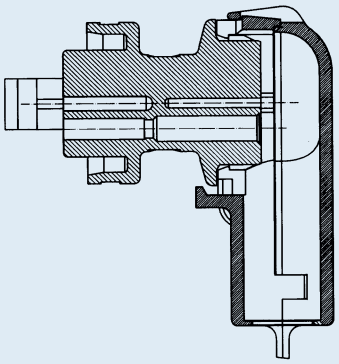 5-pol. natično kućište sa kutnomzaštitnom kapom 5-pole jack housing with angle protection cap	za kontakt for contact Ø 1,6 mm NW 8,5	crna black	Poliamid 6 Polyamide 6	7805255	50
	NW 10			7805056	50
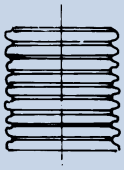 rebrasta cijev Corrugated tube	NW 8,5 NW 10				

8-polni utikač
SEAL (brtvljeni kontakt)

8-pole Plug
SEAL

ravni utikač / Straight plug — kutni utikač / Angle plug — utikač bez zaštitne kape / Plug without protection cap

IP 67

Materijal:
Poliamid 6
Silikon

Radna temperatura:
-40°C do 120°C
Kada se koristi sa priborom treba uzeti u obzir podatke o radnoj temperaturi pribora

Boje/izvedbe:
- crna
- sklopovi za montažu od 100 kom na upit

Pribor (vidi poglavlje…):
- kontakti (5.2)
- brtve (5.2)
- alati (5.2)
- obujmice za zaštitu vodiča (5.3) dodatno

Upotreba:
- gospodarska vozila
- poljoprivredni strojevi
- građevinski strojevi

Material:
Polyamide 6
Silicone

Temperature range:
-40°C to 120°C
When used with accessories please mind the respective accessory temperature data.

Colour(s)/Designs:
- black
- Assembly packages from 100 pcs on request

Accessories (see chapter…):
- Contacts (5.2)
- Seals (5.2)
- Tools (5.2)
- Secondary lock (5.3) optional

Applications:
- Heavy trucks
- Agricultural machines
- Construction machines

5.2

opis Description		za for	boja Colour	materijal Material	broj artikla Art. no.	JP kom. PU pcs.
	rebrasta cijev Corrugated tube	NW 10				
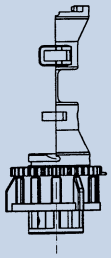	ravni utikač Straight plug		crna black	Poliamid 6 Silikon Polyamide 6 Silicone	9800681	50
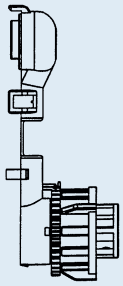	**ili/or:** kutni utikač 7 x Ø 1,6 mm Angle plug 1 x Ø 3,5 mm		crna black	Poliamid 6 Silikon Polyamide 6 Silicone	9800680	50
	sa bravom with add. locking hole			Poliamid 6 Silikon Polyamide 6 Silicone	9800682	50
	kutni utikač 8 x Ø 1,6 mm Angle plug				9800685	50
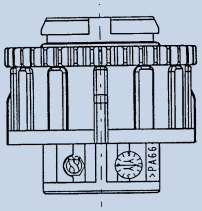	**ili/or:** utikač bez zaštitne kape - nije moguća montaža sa rebrastom cijevi, - nisu primjenjive obujmice za zaštitu vodiča Plug without protection cap - no corrugated tube assembly possible, - no secondary locking applicable		crna black	Poliamid 6 Silikon Polyamide 6 Silicone	9800617	50

8-polna priključnica

SEAL (brtvljeni kontakt) za prirubnicu

8-pole Socket

SEAL for Flange Assembly

utično kućište
Pin housing

brtva plosnata
Flat sealing

prirubnica
Flange

IP 67

Materijal:
Poliamid 6
Silikon

Radna temperatura:
-40°C do 120°C
Kada se koristi sa priborom treba uzeti u obzir podatke o radnoj temperaturi pribora

Boje/izvedbe:
- Boje: vidi tabelu
- sklopovi za montažu od 100 kom na upit

Svojstva:
- za prirubnicu

Pribor (vidi poglavlje 5.2):
- kontakti
- brtve
- alati

Upotreba:
- gospodarska vozila
- poljoprivredni strojevi
- građevinski strojevi

Material:
Polyamide 6
Silicone

Temperature range:
-40°C to 120°C
When used with accessories please mind the respective accessory temperature data.

Colour(s)/Designs:
- Colours: s. table
- Assembly packages from 100 pcs on request

Characteristics:
- for Flange assembly

Accessories (see chapter 5.2):
- Contacts
- Seals
- Tools

Applications:
- Heavy trucks
- Agricultural machines
- Construction machines

5.2

opis Description		boja Colour	materijal Material	broj artikla Art. no.	JP kom. PU pcs.
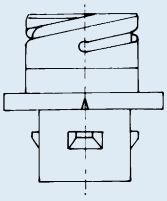	8-pol. utično kućište sa bajonetom 16 S 8-pole pin housing with bayonet 16 S 7 x Ø 1,6 mm 1 x Ø 3,5 mm	crna black	Poliamid 6 Polyamide 6	7806390	50
	8-pol. utično kućište sa bajonetom 16 S 8-pole pin housing with bayonet 16 S 8 x Ø 1,6 mm			7806391	50
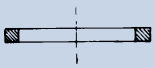	brtva plosnata Flat sealing	prozirna transparent	Silikon Silicone	7813032	50
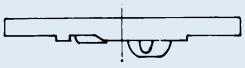	prirubnica Flange	crna black	Poliamid 6 Polyamide 6	7813015	50

8-polna priključnica

SEAL (brtvljeni kontakt) za rebrastu cijev

8-pole Socket

SEAL for corrugated tube assembly

utično kućište
Pin Housing

IP 67

5.2

Materijal:
Poliamid 6
Neopren

Radna temperatura:
-40°C do 105°C
Kada se koristi sa priborom treba uzeti u obzir podatke o radnoj temperaturi pribora

Boje/izvedbe:
- sklopovi za montažu od 100 kom na upit

Svojstva:
- za rebrastu cijev (dodatno moguća prirubnica)
- kontakti:
  7 x utični Ø: 1,6 mm
  1 x utični Ø: 3,5 mm
  na poziciji '8'

Pribor (vidi poglavlje…) :
- kontakti (5.2)
- brtve (5.2)
- alati (5.2)
- brtveni prsten (5.3)

Upotreba:
- gospodarska vozila
- poljoprivredni strojevi
- građevinski strojevi

Material:
Polyamide 66
Neoprene

Temperature range:
-40°C to 105°C
When used with accessories please mind the respective accessory temperature data.

Colour(s)/Designs:
- Assembly packages from 100 pcs on request

Characteristics:
- for corrugated tube (optional flange possible)
- Contacts:
  7 x jack contact Ø: 1,6 mm
  1 x jack contact Ø: 3,5 mm
  on position '8'

Accessories (see chapter…):
- Contacts (5.2)
- Seals (5.2)
- Tools (5.2)
- Clamp sealing (5.3)

Applications:
- Heavy trucks
- Agricultural machines
- Construction machines

opis Description	za for	boja Colour	materijal Material	broj artikla Art. no.	JP PU
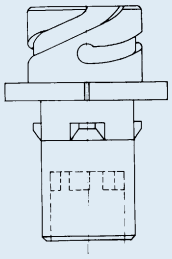 utično kućište sa bajonetom 16 S Pin housing with bayonet 16 S		crna black	Poliamid 6 Polyamide 6	9800575	50
sa bravom with add. locking hole		crna black	Poliamid 6 Polyamide 6	9800576	50
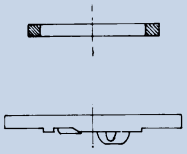 brtva plosnata sa prirubnicom (dodatno) Flat sealing with Fange (optional)		prozirna transparent	Silikon Silicone	7813032	50
		crna black	Poliamid 6 Polyamide 6	7813015	50
brtveni prsten Clamp sealing	NW 13	crna black	Neopren Neoprene	8117136	50
rebrasta cijev Corrugated tube	NW 13				
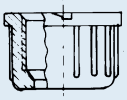 pričvrsna matica Cap nut	NW 13	siva grey	Poliamid Polyamide	9800956	50

16-polna priključnica
SEAL (montaža)

16-pole Socket
SEAL (Assembling)

utikač / Plug | priključnica (s prirubnicom) / Socket (with flange) | priključnica (bez prirubnice) / Socket (without flange)

IP 67

Materijal:
Poliamid 6/66
30% ojačan staklenim vlaknima
Silikon
Polikarbonat

Radna temperatura:
-40°C do 105°C

Boje/izvedbe:
- vidi tabelu za boje
- pakiranja za montažu od 100 komada na upit

Pribor (vidi poglavlje…):
- kontakti (5.2)
- brtve (5.2)
- alati (5.2)
- međuprsten (5.3)

Upotreba:
- gospodarska vozila
- poljoprivredni strojevi
- građevinski strojevi

Material:
Polyamide 6/66
30 % glassfibre reinforced
Silicone
Polycarbonate

Temperature range:
-40°C to 105°C

Colour(s)/Designs:
- Colours see table
- Assembly packages from 100 pcs on request

Accessories (see chapter…):
- Contacts (5.2)
- Seals (5.2)
- Tools (5.2)
- Center ring (5.3)

Applications:
- Heavy trucks
- Agricultural machines
- Construction machines

5.2

Opis Description	za for	boja Colour	materijal Material	broj artikla Art. no.	VE PU
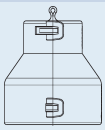 prijelaz Adaptor	NW 17	crna black	PA 6/66	7807850	50
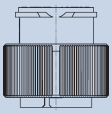 utikač - utično kućište Plug-pin housing utikač - natično kućište Plug-jack housing		crna black	PA 66 GF 30 Silikon/Silicone	7811110 7812100	50 50
dodatno međuprsten **Optional** Center ring	optional	prozirna transparent	Polikarbonat Polycarbonate	7810400	50
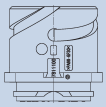 priključnica - natično kućište (s prirubnicom) Socket-jack housing (with flange) priključnica - utično kućište (s prirubnicom) Socket-pin housing (with flange)		crna black	PA 66 GF 30 Silikon/Silicone	7812110 7811100	50 50
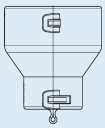 prijelaz Adaptor	NW 17	crna black	PA 6/66	7807850	50
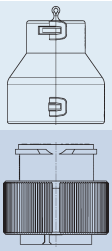 prijelaz Adaptor	NW 17	crna black	PA 6/66	7807850	50
utikač - utično kućište Plug-pin housing utikač - natično kućište Plug-jack housing		crna black	PA 66 GF 30 Silikon/Silicone	7811110 7812100	50 50
dodatno međuprsten **Optional** Center ring	optional	prozirna transparent	Polikarbonat Polycarbonate	7810400	50
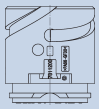 priključnica (bez prirubnice) Socket-pin (without flange) priključnica - utično kućište (bez prirubnice) Socket-pin housing (without flange)		crna black	PA 6/66	7812210 7811200	50 50
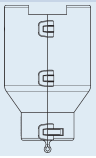 prijelaz (nerotirajući) Adaptor (non rotable)	NW 17	crna black		7807851	50

16-polni utikač/priključnica
SEAL (brtvljeni kontakt)

16-pole Plug/Socket
SEAL

utikač / Plug | priključnica (s prirubnicom) / Socket (with flange) | priključnica (bez prirubnice) / Socket (without flange)

IP 67

Materijal:
Poliamid 6/66
30% ojačan staklenim vlaknima
Silikon

Radna temperatura:
-40°C do 105°C

Boje/izvedbe:
• vidi tabelu za boje

Pribor (vidi poglavlje…):
• kontakti (5.2)
• brtve (5.2)
• alati (5.2)

Upotreba:
• gospodarska vozila
• poljoprivredni strojevi
• građevinski strojevi

Material:
Polyamide 6/66
30 % glassfibre reinforced
Silicone

Temperature range:
-40°C to 105°C

Colour(s)/Designs:
• Colours see table

Accessories (see chapter…):
• Contacts (5.2)
• Seals (5.2)
• Tools (5.2)

Applications:
• Heavy trucks
• Agricultural machines
• Construction machines

Opis Description		Boja Colour	broj artikla Art. no.	JP PU
16-pol. utikač - utično kućište kontakti: 12 x utični Ø 1,6 mm 4 x utični Ø 3,5 mm	16 pole plug-pin housing Contacts: 12 x pin contact Ø 1,6 mm 4 x pin contact Ø 3,5 mm	crna black	7811110	50
16-pol. utikač - natično kućište kontakti: 12 x natični Ø 1,6 mm 4 x natični Ø 3,5 mm	16-pole plug-jack housing Contacts: 12 x jack contact Ø 1,6 mm 4 x jack contact Ø 3,5 mm	crna black	7812100	50
16-pol. priključnica -utično kućište (s prirubnicom) kontakti: 12 x utični Ø 1,6 mm 4 x utični Ø 3,5 mm	16-pole socket-pin housing (with flange) Contacts: 12 x pin contact Ø 1,6 mm 4 x pin contact Ø 3,5 mm	crna black	7811100	50
16-pol. priključnica - natično kućište (s prirubnicom) kontakti: 12 x natični Ø 1,6 mm 4 x natični Ø 3,5 mm	16-pole socket-jack housing (with flange) Contacts: 12 x jack contact Ø 1,6 mm 4 x jack contact Ø 3,5 mm	crna black	7812110	50
16-pol. priključnica - utično kućište (bez prirubnice) kontakti: 12 x utični Ø 1,6 mm 4 x utični Ø 3,5 mm	16-pole socket-pin housing (without flange) Contacts: 12 x pin contact Ø 1,6 mm 4 x pin contact Ø 3,5 mm	crna black	7811200	50
16-pol. priključnica - natično kućište (bez prirubnice) kontakti: 12 x natični Ø 1,6 mm 4 x natični Ø 3,5 mm	16-pole socket-jack housing (without flange) Contacts: 12 x jack contact Ø 1,6 mm 4 x jack contact Ø 3,5 mm	crna black	7812210	50

35-polni konektor

SEAL (brtvljeni kontakt) (montaža)

35-pole Connector

SEAL (Assembling)

utikač
Plug

priključnica
Socket

IP 67

Materijal:
Poliamid 66
30 % ojačan staklenim vlaknima
Neopren
Polikarbonat
Silikon

Radna temperatura:
-40°C do 105°C
Kada se koristi sa priborom treba uzeti u obzir podatke o radnoj temperaturi pribora

Boje/izvedbe:
- crna/siva
- sklopovi za montažu od 100 komada na upit

Pribor (vidi poglavlje…) :
- kontakti (5.2)
- brtve (5.2)
- alati (5.2)
- pričvrsna matica (5.3)
- brtveni prsten (5.3)
- prijelaz (5.3)
- ploča za centriranje (5.3)
- luk 90° (5.3)
- zaštitna kapa (5.3)
- obujmice za zaštitu vodiča (5.3) dodatno

Upotreba:
- gospodarska vozila
- poljoprivredni strojevi
- građevinski strojevi

Material:
Polyamide 66
30 % glassfibre reinforced
Neoprene
Polycarbonate
Silicone

Temperature range:
-40°C to 105°C
When used with accessories please mind the respective accessory temperature data.

Colour(s)/Designs:
- black/grey
- Assembly packages from 100 pcs on request

Accessories (see chapter…):
- Contacts (5.2)
- Seals (5.2)
- Tools (5.2)
- Cap nut (5.3)
- Clamp sealing (5.3)
- Adaptor (5.3)
- Center plate (5.3)
- 90°-angle (5.3)
- Dust cap (5.3)
- Secundary lock (5.3) optional

Applications:
- Heavy trucks
- Agricultural machines
- Construction machines

5.2

opis Description	za for	boja Colour	materijal Material	broj artikla Art. no.	JP kom. PU pcs.
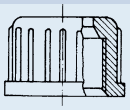 pričvrsna matica Cap nut	NW 17 NW 22 NW 29	siva grey	Poliamid Polyamide	9800697 9800905 9801138	50 50 50
rebrasta cijev Corrugated tube	NW 17 NW 22 NW 29				
brtveni prsten Clamp sealing	NW 17 NW 22 NW 29	crna black	Neopren Neoprene	8117179 8117225 8117292	50 50 50
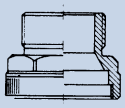 prijelaz Adaptor	NW 17 NW 22 NW 29	crna black	Poliamid 66 GF30 Polyamide 66 GF30	7807259 7807260 7807341	50 50 50
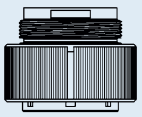 utikač-utično kućište Plug-pin housing utikač-natično kućište Plug-jack housing		crna black	Poliamid 66 GF30 Silikon Polyamide 66 GF30 Silicone	7811222 7812226	50 50
dodatno ploča za centriranje **optional** Center plate	**dodatno** **optional**	prozirna transparent	Polikarbonat Polycarbonate	7810403	50
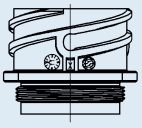 priključnica-natično kućište Socket-jack housing priključnica-utično kućište Socket-pin housing		crna black	Poliamid 66 GF30 Polyamide 66 GF30	7812218 7811230	50 50
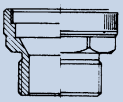 prijelaz Adaptor	NW 17 NW 22 NW 29	crna black	Poliamid 66 GF30 Polyamide 66 GF30	7807259 7807260 7807341	50 50 50
brtveni prsten Clamp sealing	NW 17 NW 22 NW 29	crna black	Neopren Neoprene	8117179 8117225 8117292	50 50 50
rebrasta cijev Corrugated tube **ili/or:** luk 90° 90°-angle	NW 17 NW 22 NW 29				
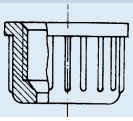 pričvrsna matica Cap nut	NW 17 NW 22 NW 29	siva grey	Poliamid Polyamide	9800697 9800905 9801138	50 50 50

35-polni utikač/priključnica

SEAL (brtvljeni kontakt)

35-pole Plug/Socket

SEAL

utikač
Plug

priključnica
Socket

IP 67

Materijal:
Poliamid 66
30 % ojačan staklenim vlaknima
Silikon

Radna temperatura:
-40°C do 105°C
Kada se koristi sa priborom treba uzeti u obzir podatke o radnoj temperaturi pribora

Boje/izvedbe:
• crna

Svojstva:
• u skladu sa VG 95234

Pribor (vidi poglavlje 5.2) :
• kontakti
• brtve
• alati

Upotreba:
• gospodarska vozila
• poljoprivredni strojevi
• građevinski strojevi

Material:
Polyamide 66
30 % glassfibre reinforced
Silicone

Temperature range:
-40°C to 105°C
When used with accessories please mind the respective accessory temperature data.

Colour(s)/Designs:
• black

Charecteristics:
• similar to VG 95234

Accessories (see chapter 5.2):
• Contacts
• Seals
• Tools

Applications:
• Heavy trucks
• Agricultural machines
• Construction machines

5.2

opis	Description	boja Colour	broj artikla Art. no.	JP kom. PU pcs.
35-pol. utikač-utično kućište kontakti: 26 x utični Ø: 1,6 mm 9 x utični Ø: 3,5 mm	**35-pole plug-pin housing** contacts: 26 x pin contact Ø: 1,6 mm 9 x pin contact Ø: 3,5 mm	crna black	7811222	50
35-pol. utikač-natično kućište kontakti: 26 x natični Ø: 1,6 mm 9 x natični Ø: 3,5 mm	**35-pole plug-jack housing** contacts: 26 x jack contact Ø: 1,6 mm 9 x jack contact Ø: 3,5 mm	crna black	7812226	50
35-pol. priključnica-utično kućište kontakti: 26 x utični Ø: 1,6 mm 9 x utični Ø: 3,5 mm	**35-pole socket-pin housing** contacts: 26 x pin contact Ø: 1,6 mm 9 x pin contact Ø: 3,5 mm	crna black	7811230	50
35-pol. priključnica-natično kućište kontakti: 26 x natični Ø: 1,6 mm 9 x natični Ø: 3,5 mm	**35-pole socket-jack housing** contacts: 26 x jack contact Ø: 1,6 mm 9 x jack contact Ø: 3,5 mm	crna black	7812218	50

37-polni utikač

SEAL (brtvljeni kontakt)

37-pole Plug

SEAL

utikač
Plug

IP 67

Materijal:
Poliamid 66
30 % ojačan staklenim vlaknima
Perbunan
Silikon

Radna temperatura:
-40°C do 105°C
Kada se koristi sa priborom treba uzeti u obzir podatke o radnoj temperaturi pribora

Boje/izvedbe:
- crna
- specijalni utikač na upit

Svojstva:
- u skladu sa VG 95234

Pribor (vidi poglavlje…) :
- kontakti (5.2)
- brtve (5.2)
- alati (5.2)
- prijelaz (5.3)
- luk 90° (5.3)
- zaštitna kapa (5.3)

Upotreba:
- gospodarska vozila
- poljoprivredni strojevi
- građevinski strojevi

Material:
Polyamide 66
30 % glassfibre reinforced
Perbunan
Silicone

Temperature range:
-40°C to 105°C
When used with accessories please mind the respective accessory temperature data.

Colour(s)/Designs:
- black
- special plug on request

Characteristics:
- similar to VG 95234

Accessories (see chapter…):
- Contacts (5.2)
- Seals (5.2)
- Tools (5.2)
- Adaptor (5.3)
- 90°-angle (5.3)
- Dust cap (5.3)

Applications:
- Heavy trucks
- Agricultural machines
- Construction machines

5.2

opis	Description	boja kom. Colour pcs.	broj artikla Art. no.	JP PU
37-pol. utikač odgovara za SEAL kontakti: 37 x utični ili natični Ø 1,6 mm	**37-pole plug-pin housing suitable for SEAL** contacts: 37 x pin or jack contact Ø 1,6 mm	crna black	7811375	50

Kontakti/brtve/alati za SEAL-konektore

Contacts / SEALS / Tools for SEAL Connectors

Materijal:
bronca
pokositrena

Material:
Bronze
Surface tin-plated

5.2

	Ø kontakta mm Ø Contact cavity mm	kontakt Single Contact broj artikla Art. no.	JP kom. PU pcs.	izolacija Strip material broj artikla Art. no.	JP kom. PU pcs.	presjek FLR-kabela in mm^2 Cross section FLR-wire (mm^2)	4-pol natično kućište bez kompenzacije tlaka jack housing without pressure compensation 9800330,..331,..332,..333 9800350,..351,..352,..353 9800310,..311,..312,..313 9800374,..375,..376,..377	natično kućište sa kompenzacijom tlaka jack housing with pressure compensation 9800300,..301,..302,..303 9800320,..321,..322,..323 9800340,..341,..342,..343 9800384,..385,..386,..387
Kontakti/Contacts								
	6,7 *	7814125	1	7814123	2700	0,5 - 1,0	●	
		7814126	1	7814124	2700	1,5 - 2,5	●	
	4,0 **	7815045	1	7815046	4000	0,75 - 1,5		
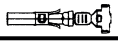		7814045	1	7814046	4500	0,75 - 1,5		
	5,2 ***	7815050	1	7815053	4000	0,5 - 1,0		
		7815051	1	7815052	4000	1,5 - 2,5		
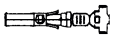		7814050	1	7814053	4000	0,5 - 1,0		
		7814051	1	7814052	4000	1,5 - 2,5		
	5,2 ****	7815047	1	7815049	3000	0,5 - 1,0		
		7815048	1	7815054	3000	1,5 - 2,5		
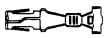		7814047	1	7814049	3000	0,5 - 1,0		
		7814048	1	7814054	3000	1,5 - 2,5		
BRTVE								
	4,0	7814137	1			0,75 - 1,0		
		7814138	1			1,5		
	5,2	7814140	1			0,35 - 1,0		
		7814141	1			1,5 - 2,5		
	6,7	7814128	1			0,35 - 1,0	●	
		7814129	1			1,5 - 2,5	●	
BRTVE slijepe								
	4,0	7814135	1					
	5,2	7814136	1					
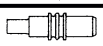	6,7	7814130	1				●	

Odgovarajuća kliješta za gnječenje / Suitable hand crimping pliers

*	7814146
* *	7814145
* * *	7814147
* * * *	7814148

Kontakti/brtve/alati za SEAL-konektore

Contacts / SEALs / Tools for SEAL Connectors

Materijal:
bronca
pokositrena

Material:
Bronze
Surface tin-plated

5-pol		8-pol			16-pol		35-pol		37-pol			
utično kućište pin-housing 7806248 7806249 7806252 7806053	natično kućište Socket-jack housing 7805252 7805253 7805255 7805056	utično kućište pin-housing 7806390 9800575 9800576	utično kućište pin-housing 7806391	natično kućište Socket-jack housing 9800680 9800681 9800617 9800682	utično kućište pin-housing 7811100 7811110 7811200	natično kućište Socket-jack housing 7812100 7812110 7812210	utično kućište pin-housing 7811222 7811230	natično kućište Socket-jack housing 7812218 7812226	utikač za muške/ženske kontakte plug for pin-jack contacts 7811375		utikač za muške/ženske kontakte plug for pin-/jack contacts 7811377 sa 12 zatvorenih otvora za kontakte with 12 closed contact cavities	
●					●(12)		●(26)		●(37)		●(25)	
	●					●(12)		●(26)		●(37)		●(25)
		●(7)	●(8)									
		●(7)	●(8)									
				●(7)								
				●(7)								
		●(1)			●(4)		●(9)					
		●(1)			●(4)		●(9)					
				●(1)		●(4)		●(9)				
				●(1)		●(4)		●(9)				
●	●				●(12)	●(12)	●(26)	●(26)	●(37)	●(37)	●(25)	●(25)
●	●				●(12)	●(12)	●(26)	●(26)	●(37)	●(37)	●(25)	●(25)
		●	●	●	●(4)	●(4)	●(9)	●(9)				
		●	●	●	●(4)	●(4)	●(9)	●(9)				
●	●				●(12)	●(12)	●(26)	●(26)	●(37)	●(37)	●(25)	●(25)
		●	●	●	●(4)	●(4)	●(9)	●(9)				

Odgovarajući alati za vađenje kontakata / Suitable extraction tools

*	7704484
* *	7704497
* * *	7704497
* * * *	7704489

3-polni konektor

nije SEAL (nebrtvljeni kontakt)

3-pole Connector

non SEAL

natično kućište
Jack housing

utično kućište
Pin housing

IP 67

Materijal:
Poliamid 66
Neopren
meki-PVC

Radna temperatura:
-35°C do 100°C
Kada se koristi sa priborom treba uzeti u obzir podatke o radnoj temperaturi pribora

Boje/izvedbe:
- Boje: vidi tabelu
- sklopovi za montažu od 100 kom na upit

Pribor (vidi poglavlje…) :
- kontakti (5.2)
- alati (5.2)
- pričvrsna matica (5.3)
- brtva za kabel (5.3)
- zaporni prsten dodatno
- brtva za pojedinačne vodiče (5.3)
- brtveni prsten (5.3)

Upotreba:
- gospodarska vozila
- poljoprivredni strojevi
- građevinski strojevi

Material:
Polyamide 66
Neoprene
Soft-PVC

Temperature range:
-35°C to 100°C
When used with accessories please mind the respective accessory temperature data.

Colour(s)/Designs:
- Colours: s. table
- Assembly packages from 100 pcs on request

Accessories (see chapter…):
- Contacts (5.2)
- Tools (5.2)
- Cap nut (5.3)
- Sealing buffer (5.3)
- Locking ring optional
- Single wire sealing (5.3)
- Clamp sealing (5.3)

Applications:
- Heavy trucks
- Agricultural machines
- Construction machines

5.2

opis Description	za for	boja Colour	materijal Material	broj artikla Art. no.	JP kom. PU pcs.
pričvrsna matica Cap nut	NW 10	siva grey	Poliamid Polyamide	9800689	50
brtva za kabel Sealing buffer	Ø 4,5 mm Ø 5,6 mm	crna black	Neopren Neoprene	8115516 8115508	50 50
ili/or uložak za brtvljenje Sealing insert	Ø 7 - 10,5 mm	zelena green	meki-PVC Soft-PVC	8115605	100
kabel Cable	kabel Ø 4,5 mm Cable Ø 4,5 mm kabel Ø 5,6 mm Cable Ø 5,6 mm				
3-pol. natično kućište PG11 3-pole jack housing PG11	za kontakt Ø 3,5 mm for contact Ø 3,5 mm	natur natural	Poliamid 66 Neopren Polyamide 66 Neoprene	7801017	50
3-pol. utično kućište PG11 3-pole pin housing PG11	za kontakt Ø 3,5 mm for contact Ø 3,5 mm	natur natural	Poliamid 66 Polyamide 66	7801009	50
dodatno brtva za pojedinačne vodiče **optional** Single wire sealing	**dodatno** **optional**	crna black	Neopren Neoprene	8113647	50
brtveni prsten Clamp sealing	NW 8,5 NW 10	crna black	Neopren Neoprene	8117080 8117101	50 50
rebrasta cijev Corrugated tube	NW 8,5 NW 10				
pričvrsna matica Cap nut	NW 8,5 NW 10	siva grey	Poliamid Polyamide	9801324 9800689	50 50

5-polni konektor

nije SEAL (nebrtvljeni kontakt)

5-pole Connector

non SEAL

IP 67

natično kućište
Jack housing

utično kućište
Pin housing

Materijal:
Poliamid 6
Neopren
Perbunan

Radna temperatura:
-40°C do 105°C
Kada se koristi sa priborom treba uzeti u obzir podatke o radnoj temperaturi pribora

Boje/izvedbe:
- crna/siva
- ravna
- sklopovi za montažu od 100 kom na upit

Svojstva:
- spojni sistem Ø: 1,6 mm

Pribor (vidi poglavlje…) :
- kontakti (5.2)
- alati (5.2)
- pričvrsna matica (5.3)
- brtveni prsten (5.3)

Upotreba:
- gospodarska vozila
- poljoprivredni strojevi
- građevinski strojevi

Material:
Polyamide 6
Neoprene
Perbunan

Temperature range:
-40°C to 105°C
When used with accessories please mind the respective accessory temperature data.

Colour(s)/Designs:
- black/grey
- straight
- Assembly packages from 100 pcs on request

Characteristics:
- Contact system Ø: 1,6 mm

Accessories (see chapter…):
- Contacts (5.2)
- Tools (5.2)
- Cap nut (5.3)
- Clamp sealing (5.3)

Applications:
- Heavy trucks
- Agricultural machines
- Construction machines

5.2

opis Description	za for	boja Colour	materijal Material	broj artikla Art. no.	JP kom. PU pcs.
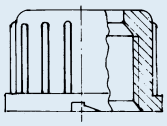 pričvrsna matica Cap nut	NW 8,5 NW 10	siva grey	Poliamid Polyamide	9801324 9800689	50 50
rebrasta cijev Corrugated tube	NW 8,5 NW 10				
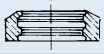 brtveni prsten Clamp sealing	NW 8,5 NW 10	crna black	Neopren Neoprene	8117080 8117101	50 50
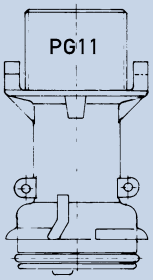 5-pol. utično kućište PG11 5-pole pin housing PG11	za kontakt for contact Ø 1,6 mm	crna black	Poliamid 6 Perbunan Polyamide 6 Perbunan	7806043	50
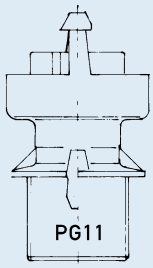 5-pol. natično kućište PG11 5-pole jack housing PG11	za kontakt for contact Ø 1,6 mm	crna black	Poliamid 6 Polyamide 6	7805047	50
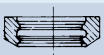 brtveni prsten Clamp sealing	NW 8,5 NW 10	crna black	Neopren Neoprene	8117080 8117101	50 50
rebrasta cijev Corrugated tube	NW 8,5 NW 10				
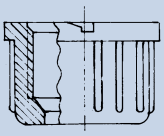 pričvrsna matica Cap nut	NW 8,5 NW 10	siva grey	Poliamid 6 Polyamide 6	9801324 9800689	50 50

8-polni konektor

nije SEAL (nebrtvljeni kontakt) za prirubnicu

8-pole Connector

non SEAL for Flange Assembly

glava ravna
Straight cone

glava 90°
Angle cone

utično kućište
Pin housing

natično kućište
Jack housing

IP 67

5.2

Materijal:
Poliamid 6
Neopren
Silikon

Radna temperatura:
-40°C do 105°C
Kada se koristi sa priborom treba uzeti u obzir podatke o radnoj temperaturi pribora

Boje/izvedbe:
- Boje: vidi tabelu
- sklopovi za montažu od 100 kom na upit

Svojstva:
- kontakti
  7 x kontakt Ø: 1,6 mm
  1 x kontakt Ø: 3,5 mm
  na poziciji '8'

  ili:
  8 x kontakt Ø: 1,6 mm

Pribor (vidi poglavlje…) :
- kontakti (5.2)
- alati (5.2)
- pričvrsna matica (5.3)
- brtveni prsten (5.3)
- brtva za pojedinačne vodiče (5.3)
- brtva plosnata (5.3)
- prirubnica

Upotreba:
- gospodarska vozila
- poljoprivredni strojevi
- građevinski strojevi

Material:
Polyamide 6
Neoprene
Silicone

Temperature range:
-40°C to 105°C
When used with accessories please mind the respective accessory temperature data.

Colour(s)/Designs:
- Colours: s. table
- Assembly packages from 100 pcs on request

Characteristics:
- Contacts:
  7 x contact Ø: 1,6 mm
  1 x contact Ø: 3,5 mm
  on position '8'

  or:
  8 x contact Ø: 1,6 mm

Accessories (see chapter…):
- Contacts (5.2)
- Tools (5.2)
- Cap nut (5.3)
- Clamp sealing (5.3)
- Single wire sealing (5.3)
- Flat sealing (5.3)
- Flange

Applications:
- Heavy trucks
- Agricultural machines
- Construction machines

opis Description		za for	boja Colour	materijal Material	broj artikla Art. no.	JP kom. PU pcs.
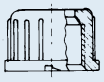	pričvrsna matica Cap nut	NW 10	siva grey	Poliamid Polyamide	9800689	50
	rebrasta cijev Corrugated tube	NW 10				
	brtveni prsten Clamp sealing	NW 10	crna black	Neopren Neoprene	8117101	50
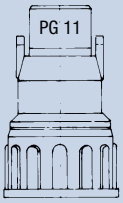	glava ravna PG11 sa bajonetom 16 S u skladu sa VG 95234 Straight cone PG11 with bayonet 16 S similar VG 95234		crna black	Poliamid 6 Polyamide 6	9800611	50
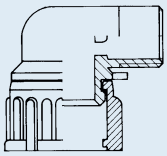	**ili/or:** glava 90° PG11 sa bajonetom 16 S Angle cone PG11 with bayonet 16 S		crna black	Poliamid 6 Polyamide 6	9800603	50
	brtva za pojedinačne vodiče Single wire sealing		crveno-smeđa red-brown	Silikon Silicone	8113646	50
	8-pol. natično kućište 8-pole jack housing	kontakti/contacts: 7 x Ø 1,6 mm 1 x Ø 3,5 mm	crna black	Poliamid 6 Polyamide 6	7805098	50
		ili/or 8 x Ø 1,6 mm			7805080	50
	brtva plosnata Flat sealing		crna black	Neopren Neoprene	8113424	50
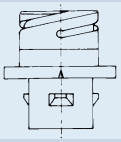	8-pol. utično kućište sa bajonetom 16 S u skladu sa VG 95234 8-pole pin housing with bayonet 16 S similar to VG 95234	kontakti/contacts: 7 x Ø 1,6 mm 1 x Ø 3,5 mm	crna black	Poliamid 6 Polyamide 6	7806388	50
		ili/or: 8 x Ø 1,6 mm			7806086	50
	brtva plosnata Flat sealing		natur natural	Silikon Silicone	7813032	50
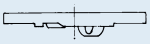	prirubnica Flange		crna black	Poliamid 6 Polyamide 6	7813015	50

8-polni konektor

nije SEAL (nebrtvljeni kontakt)
za rebrastu cijev

8-pole Connector

non SEAL
for corrugated Tube Assembly

glava ravna Straight cone	glava 90° Angle cone	utično kućište Pin housing	natično kućište Jack housing

IP 67

Materijal:
Poliamid 6
Neopren
Silikon

Radna temperatura:
-40°C do 105°C
Kada se koristi sa priborom treba uzeti u obzir podatke o radnoj temperaturi pribora

Boje/izvedbe:
- Boje: vidi tabelu
- sklopovi za montažu od 100 kom na upit

Svojstva:
- kontakti
  7 x kontakt Ø: 1,6 mm
  1 x kontakt Ø: 3,5 mm
  na poziciji '8'
  ili:
  8 x kontakt Ø: 1,6 mm

Pribor (vidi poglavlje…) :
- kontakti (5.2)
- alati (5.2)
- pričvrsna matica (5.3)
- brtveni prsten (5.3)
- brtva za pojedinačne vodiče (5.3)
- brtva plosnata (5.3)

Upotreba:
- gospodarska vozila
- poljoprivredni strojevi
- građevinski strojevi

Material:
Polyamide 6
Neoprene
Silicone

Temperature range:
-40°C to 105°C
When used with accessories please mind the respective accessory temperature data.

Colour(s)/Designs:
- Colours: s. table
- Assembly packages from 100 pcs on request

Characteristics:
- Contacts:
  7 x contact Ø: 1,6 mm
  1 x contact Ø: 3,5 mm
  on position '8'
  or:
  8 x contact Ø: 1,6 mm

Accessories (see chapter…):
- Contacts (5.2)
- Tools (5.2)
- Cap nut (5.3)
- Clamp sealing (5.3)
- Single wire sealing (5.3)
- Flat sealing (5.3)

Applications:
- Heavy trucks
- Agricultural machines
- Construction machines

5.2

opis Description		za for	boja Colour	materijal Material	broj artikla Art. no.	JP kom. PU pcs.
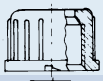	pričvrsna matica Cap nut	NW 10	siva grey	Poliamid Polyamide	9800689	50
	rebrasta cijev Corrugated tube	NW 10				
	brtveni prsten Clamp sealing	NW 10	crna black	Neopren Neoprene	8117101	50
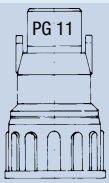	glava ravna PG11 sa bajonetom 16 S u skladu sa VG 95234 Straight cone PG11 with bayonet 16 S similar VG 95234		crna black	Poliamid 6 Polyamide 6	9800611	50
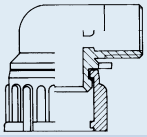	**ili/or:** glava 90° PG11 sa bajonetom 16 S Angle cone PG11 with bayonet 16 S		crna black	Poliamid 6 Polyamide 6	9800603	50
	brtva za pojedinačne vodiče Single wire sealing		crveno-smeđa red-brown	Silikon Silicone	8113646	50
	8-pol. natično kućište 8-pole jack housing	kontakti/contacts: 7 x Ø 1,6 mm/1 x Ø 3,5 mm	crna black	Poliamid 6 Polyamide 6	7805098	50
		ili/or: 8 x Ø 1,6 mm			7805080	50
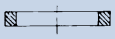	brtva plosnata Flat sealing		crna black	Neopren Neoprene	8113424	50
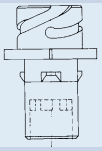	8-pol. utično kućište sa bajonetom 16 S 8-pole pin housing with bayonet 16 S	kontakti/contacts: 7 x Ø 1,6 mm 1 x Ø 3,5 mm	crna black	Poliamid 6 Polyamide 6	9800573	50
		ili/or: 8 x Ø 1,6 mm			7806051	50
	brtveni prsten Clamp sealing	NW 13	crna black	Neopren Neoprene	8117136	50
	rebrasta cijev Corrugated tube	NW 13				
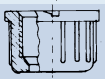	pričvrsna matica Cap nut	NW 13	siva grey	Poliamid 6 Polyamide 6	9800956	50

16-polni konektor

nije SEAL (nebrtvljeni kontakt) (montaža)

16-pole Connector

non SEAL (Assembling)

IP 67

priključnica
Socket

utikač
Plug

Materijal:
Poliamid 6/66
30 % ojačan staklenim vlaknima
Neopren
Perbunan
Polikarbonat
Silikon

Radna temperatura:
-40°C do 105°C
Kada se koristi sa priborom treba uzeti u obzir podatke o radnoj temperaturi pribora

Boje/izvedbe:
- Boje: vidi tabelu
- sklopovi za montažu od 100 kom na upit

Svojstva:
- u skladu sa VG 95234

Pribor (vidi poglavlje…) :
- kontakti (5.2)
- alati (5.2)
- pričvrsna matica (5.3)
- brtveni prsten (5.3)
- prijelaz (5.3)
- pritisna ploča (5.3)
- brtvena ploča (5.3)
- ploča za centriranje (5.3)

Upotreba:
- gospodarska vozila
- poljoprivredni strojevi
- građevinski strojevi

Material:
Polyamide 6/66
30 % glassfibre reinforced
Neoprene
Perbunan
Polycarbonate
Silicone

Temperature range:
-40°C to 105°C
When used with accessories please mind the respective accessory temperature data.

Colour(s)/Designs:
- Colours: s. table
- Assembly packages from 100 pcs on request

Characteristics:
- similar to VG 95234

Accessories (see chapter…):
- Contacts (5.2)
- Tools (5.2)
- Cap nut (5.3)
- Clamp sealing (5.3)
- Adaptor (5.3)
- Pressure plate (5.3)
- Sealing plate (5.3)
- Center plate (5.3)

Applications:
- Heavy trucks
- Agricultural machines
- Construction machines

5.2

opis Description	za for	boja Colour	materijal Material	broj artikla Art. no.	JP kom. PU pcs.
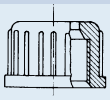 pričvrsna matica Cap nut	NW 22	siva grey	Poliamid Polyamide	9800905	50
brtveni prsten Clamp sealing	NW 22	crna black	Neopren Neoprene	8117225	50
rebrasta cijev Corrugated tube	NW 22				
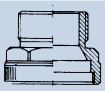 prijelaz Adaptor	NW 22	crna black	Poliamid 66 GF 30 Polyamide 66 GF 30	7807163	50
pritisna ploča Pressure plate		crna black	Poliamid 6 Polyamide 6	7810394	50
brtvena ploča Sealing plate		prozirna transparent	Silikon Silicone	7810164	50
utikač - utično kućište Plug - pin housing		crna black	Poliamid 66 GF 30 Perbunan, Silikon Polyamide 66 GF 30 Perbunan, Silicone	7811160	50
utikač - natično kućište Plug - jack housing				7812162	50
dodatno ploča za centriranje **optional** Center plate	**dodatno** **optional**	prozirna transparent	Polikarbonat Polycarbonate	7810400	50
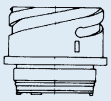 priključnica- natično kućište Socket - jack housing		crna black	Poliamid 66 GF 30 Perbunan Polyamide 66 GF 30 Perbunan	7812167	50
priključnica- utično kućište Socket - pin housing				7811163	50
brtvena ploča Sealing plate		prozirna transparent	Silikon Silicone	7810164	50
pritisna ploča Pressure plate		crna black	Poliamid 6 Polyamide 6	7810394	50
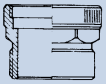 prijelaz Adaptor	NW 22	crna black	Poliamid 66 GF 30 Polyamide 66 GF 30	7807163	50
brtveni prsten Clamp sealing	NW 22	crna black	Neopren Neoprene	8117225	50
rebrasta cijev Corrugated tube	NW 22				
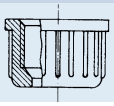 pričvrsna matica Cap nut	NW 22	siva grey	Poliamid Polyamide	9800905	50

16-polni utikač/priključnica

nije SEAL (nebrtvljeni kontakt)

16-pole Plug/Socket

non SEAL

utikač
Plug

priključnica
Socket

IP 67

Materijal:
Poliamid 66
30 % ojačan staklenim vlaknima
Perbunan
Silikon

Radna temperatura:
-40°C do 105°C
Kada se koristi sa priborom treba uzeti u obzir podatke o radnoj temperaturi pribora

Boje/izvedbe:
• crna

Svojstva:
• u skladu sa VG 95234

Pribor (vidi poglavlje 5.2) :
• kontakti
• alati

Upotreba:
• gospodarska vozila
• poljoprivredni strojevi
• građevinski strojevi

Material:
Polyamide 66
30 % glassfibre reinforced
Perbunan
Silicone

Temperature range:
-40°C to 105°C
When used with accessories please mind the respective accessory temperature data.

Colour(s)/Designs:
• black

Characteritics:
• similar to VG 95234

Accessories (see chapter 5.2):
• Contacts
• Tools

Applications:
• Heavy trucks
• Agricultural machines
• Construction machines

5.2

opis	Description	boja Colour	broj artikla Art. no.	JP kom. PU pcs.
16-pol. utikač - utično kućište kontakti: 12 x utični Ø: 1,6 mm 4 x utični Ø: 3,5 mm	**16-pole plug - pin housing** contacts: 12 x pin contact Ø: 1,6 mm 4 x pin contact Ø: 3,5 mm	crna black	7811160	50
16-pol. utikač - natično kućište kontakti: 12 x natični Ø: 1,6 mm 4 x natični Ø: 3,5 mm	**16-pole plug - jack housing** contacts: 12 x jack contact Ø: 1,6 mm 4 x jack contact Ø: 3,5 mm	crna black	7812162	50
16-pol. priključnica- utično kućište kontakti: 12 x utični Ø: 1,6 mm 4 x utični Ø: 3,5 mm	**16-pole socket - pin housing** contacts: 12 x pin contact Ø: 1,6 mm 4 x pin contact Ø: 3,5 mm	crna black	7811163	50
16-pol. priključnica- natično kućište kontakti: 12 x natični Ø: 1,6 mm 4 x natični Ø: 3,5 mm	**16-pole socket - jack housing** contacts: 12 x jack contact Ø: 1,6 mm 4 x jack contact Ø: 3,5 mm	crna black	7812167	50

21-polni konektor

nije SEAL (nebrtvljeni kontakt) (sklop)

21-pole Connector

non SEAL (Assembly)

IP 67

utikač
Plug

priključnica
Socket

Materijal:
Poliamid 6/66
30 % ojačan staklenim vlaknima
Neopren
Perbunan
Polikarbonat
Silikon

Radna temperatura:
-40°C do 105°C
Kada se koristi sa priborom treba uzeti u obzir podatke o radnoj temperaturi pribora

Boje/izvedbe:
- Boje: vidi tabelu
- sklopovi za montažu od 100 kom na upit

Svojstva:
- u skladu sa VG 95234

Pribor (vidi poglavlje…) :
- kontakti (5.2)
- alati (5.2)
- pričvrsna matica (5.3)
- brtveni prsten (5.3)
- prijelaz (5.3)
- luk 90° (5.3)
- ploča za centriranje (5.3)
- pritisna ploča (5.3)
- brtvena ploča (5.3)
- zaštitna kapa (5.3)

Upotreba:
- gospodarska vozila
- poljoprivredni strojevi
- građevinski strojevi

Material:
Polyamide 6/66
30 % glassfibre reinforced
Neoprene
Perbunan
Polycarbonate
Silicone

Temperature range:
-40°C to 105°C
When used with accessories please mind the respective accessory temperature data.

Colour(s)/Designs:
- Colours: s. table
- Assembly packages from 100 pcs on request

Characteristics:
- similar to VG 95234

Accessories (see chapter…):
- Contacts (5.2)
- Tools (5.2)
- Cap nut (5.3)
- Clamp sealing (5.3)
- Adaptor (5.3)
- 90°-angle (5.3)
- Center plate (5.3)
- Pressure plate (5.3)
- Sealing plate (5.3)
- Dust cap (5.3)

Applications:
- Heavy trucks
- Agricultural machines
- Construction machines

5.2

opis Description	za for	boja Colour	materijal Material	broj artikla Art. no.	JP kom. PU pcs.
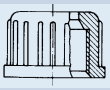 pričvrsna matica Cap nut	NW 17 NW 22 NW 29	siva grey	Poliamid Polyamide	9800697 9800905 9801138	50 50 50
brtveni prsten Clamp sealing	NW 17 NW 22 NW 29	crna black	Neopren Neoprene	8117179 8117225 8117292	50 50 50
rebrasta cijev Corrugated tube	NW 17 NW 22 NW 29				
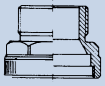 prijelaz Adaptor	NW 17 NW 22 NW 29	crna black	Poliamid 66 GF 30 Polyamide 66 GF 30	7807259 7807260 7807341	50 50 50
pritisna ploča Pressure plate		crna black	Poliamid 6 Polyamide 6	7810393	50
brtvena ploča Sealing plate		prozirna transparent	Silikon Silicone	7810210	50
utikač - utično kućište Plug - pin housing		crna black	Poliamid 66 GF 30 Perbunan, Silikon Polyamide 66 GF 30 Perbunan, Silicone	7811217	50
utikač - natično kućište Plug - jack housing				7812221	50
dodatno ploča za centriranje **optional** Center plate	**dodatno** **optional**	prozirna transparent	Polikarbonat Polycarbonate	7810401	50
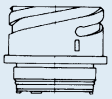 priključnica- natično kućište Socket - jack housing		crna black	Poliamid 66 GF 30 Perbunan Polyamide 66 GF 30 Perbunan	7812213	50
priključnica- utično kućište Socket - pin housing				7811225	50
brtvena ploča Sealing plate		prozirna transparent	Silikon Silicone	7810210	50
pritisna ploča Pressure plate		crna black	Poliamid 6 Polyamide 6	7810393	50
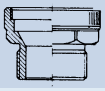 prijelaz Adaptor	NW 17 NW 22 NW 29	crna black	Poliamid 66 GF 30 Polyamide 66 GF 30	7807259 7807260 7807341	50 50 50
brtveni prsten Clamp sealing } **ili/or:**	NW 17 NW 22 NW 29	crna black	Neopren Neoprene	8117179 8117225 8117292	50 50 50
rebrasta cijev Corrugated tube } luk 90° 90°-angle	NW 17 NW 22 NW 29				
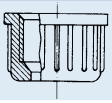 pričvrsna matica Cap nut }	NW 17 NW 22 NW 29	siva grey	Poliamid Polyamide	9800697 9800905 9801138	50 50 50

21-polni utikač/priključnica

nije SEAL (nebrtvljeni kontakt)

21-pole Plug/Socket

non SEAL

utikač
Plug

priključnica
Socket

IP 67

Materijal:
Poliamid 66
30 % ojačan staklenim vlaknima
Perbunan
Silikon

Radna temperatura:
-40°C do 105°C
Kada se koristi sa priborom treba uzeti u obzir podatke o radnoj temperaturi pribora

Boje/izvedbe:
• crna

Svojstva:
• u skladu sa VG 95234

Pribor (vidi poglavlje 5.2) :
• kontakti
• alati

Upotreba:
• gospodarska vozila
• poljoprivredni strojevi
• građevinski strojevi

Material:
Polyamide 66
30 % glassfibre reinforced
Perbunan
Silicone

Temperature range:
-40°C to 105°C
When used with accessories please mind the respective accessory temperature data.

Colour(s)/Designs:
• black

Characteristics:
• similar to VG 95234

Accessories (see chapter 5.2):
• Contacts
• Tools

Applications:
• Heavy trucks
• Agricultural machines
• Construction machines

5.2

opis	Description	boja Colour	broj artikla Art. no.	JP kom. PU pcs.
21-pol. utikač - utično kućište kontakti: 14 x utični Ø: 1,6 mm 7 x utični Ø: 3,5 mm	**21-pole plug - pin housing** contacts: 14 x pin contact Ø: 1,6 mm 7 x pin contact Ø: 3,5 mm	crna black	7811217	50
21-pol. utikač - natično kućište kontakti: 14 x natični Ø: 1,6 mm 7 x natični Ø: 3,5 mm	**21-pole plug - jack housing** contacts: 14 x jack contact Ø: 1,6 mm 7 x jack contact Ø: 3,5 mm	crna black	7812221	50
21-pol. priključnica- utično kućište kontakti: 14 x utični Ø: 1,6 mm 7 x utični Ø: 3,5 mm	**21-pole socket - pin housing** contacts: 14 x pin contact Ø: 1,6 mm 7 x pin contact Ø: 3,5 mm	crna black	7811225	50
21-pol. priključnica- natično kućište kontakti: 14 x natični Ø: 1,6 mm 7 x natični Ø: 3,5 mm	**21-pole socket - jack housing** contacts: 14 x jack contact Ø: 1,6 mm 7 x jack contact Ø: 3,5 mm	crna black	7812213	50

37-polni konektor

nije SEAL (nebrtvljeni kontakt) (sklop)

37-pole Connector

non SEAL (Assembling)

IP 67

utikač
Plug

priključnica
Socket

5.2

Materijal:
Poliamid 6/66
30 % ojačan staklenim vlaknima
Neopren
Perbunan
Polikarbonat
Silikon

Radna temperatura:
-40°C do 105°C
Kada se koristi sa priborom treba uzeti u obzir podatke o radnoj temperaturi pribora

Boje/izvedbe:
- Boje: vidi tabelu

Svojstva:
- utikač postoji i u verziji SEAL
- u skladu sa VG 95234

Pribor (vidi poglavlje…) :
- kontakti (5.2)
- alati (5.2)
- pričvrsna matica (5.3)
- brtveni prsten (5.3)
- prijelaz (5.3)
- luk 90° (5.3)
- ploča za centriranje (5.3)
- pritisna ploča (5.3)
- brtvena ploča (5.3)
- zaštitna kapa (5.3)

Upotreba:
- gospodarska vozila
- poljoprivredni strojevi
- građevinski strojevi

Material:
Polyamide 6/66
30 % glassfibre reinforced
Neoprene
Perbunan
Polycarbonate
Silicone

Temperature range:
-40°C to 105°C
When used with accessories please mind the respective accessory temperature data.

Colour(s)/Designs:
- Colours: s. table

Characteristics:
- Plug also available for SEAL
- similar to VG 95234

Accessories (see chapter…):
- Contacts (5.2)
- Tools (5.2)
- Cap nut (5.3)
- Clamp sealing (5.3)
- Adaptor (5.3)
- 90°-angle (5.3)
- Center plate (5.3)
- Pressure plate (5.3)
- Sealing plate (5.3)
- Dust cap (5.3)

Applications:
- Heavy trucks
- Agricultural machines
- Construction machines

opis Description		za for	boja Colour	materijal Material	broj artikla Art. no.	JP kom. PU pcs.
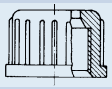	pričvrsna matica Cap nut	NW 17 NW 22 NW 29	siva grey	Poliamid Polyamide	9800697 9800905 9801138	50 50 50
	rebrasta cijev Corrugated tube	NW 17 NW 22 NW 29				
	brtveni prsten Clamp sealing	NW 17 NW 22 NW 29	crna black	Neopren Neoprene	8117179 8117225 8117292	50 50 50
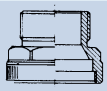	prijelaz Adaptor	NW 17 NW 22 NW 29	crna black	Poliamid 66 GF 30 Polyamide 66 GF 30	7807259 7807260 7807341	50 50 50
	pritisna ploča Pressure plate		crna black	Poliamid 6 Polyamide 6	7810385	50
	brtvena ploča Sealing plate		prozirna transparent	Silikon Silicone	7810377	50
	37-pol. utikač 37-pole plug		crna black	Poliamid 66 GF 30 Perbunan, Silikon Polyamide 66 GF 30 Perbunan, Silicone	7811373	50
	ploča za centriranje Center plate		prozirna transparent	Polikarbonat Polycarbonate	7810402	50
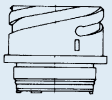	37-pol. priključnica 37-pole socket		crna black	Poliamid 66 GF 30 Perbunan Polyamide 66 GF 30 Perbunan	7812370	50
	brtvena ploča Sealing plate		prozirna transparent	Silikon Silicone	7810377	50
	pritisna ploča Pressure plate		crna black	Poliamid 6 Polyamide 6	7810385	50
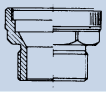	prijelaz Adaptor	NW 17 NW 22 NW 29	crna black	Poliamid 66 GF 30 Polyamide 66 GF 30	7807259 7807260 7807341	50 50 50
	brtveni prsten Clamp sealing **ili/or:**	NW 17 NW 22 NW 29	crna black	Neopren Neoprene	8117179 8117225 8117292	50 50 50
	rebrasta cijev Corrugated tube luk 90° 90°-angle	NW 17 NW 22 NW 29				
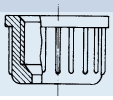	pričvrsna matica Cap nut	NW 17 NW 22 NW 29	siva grey	Poliamid Polyamide	9800697 9800905 9801138	50 50 50

37-polni utikač/priključnica

nije SEAL (nebrtvljeni kontakt)

37-pole Plug/Socket

non SEAL

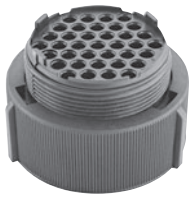

utikač
Plug

priključnica
Socket

IP 67

Materijal:
Poliamid 66
30 % ojačan staklenim vlaknima
Perbunan
Silikon

Radna temperatura:
-40°C do 105°C
Kada se koristi sa priborom treba uzeti u obzir podatke o radnoj temperaturi pribora

Boje/izvedbe:
- crna
- specijalni utikač na upit

Svojstva:
- utikač postoji i u verziji SEAL
- u skladu sa VG 95234

Pribor (vidi poglavlje 5.2) :
- kontakti
- alati

Upotreba:
- gospodarska vozila
- poljoprivredni strojevi
- građevinski strojevi

Material:
Polyamide 66
30 % glassfibre reinforced
Perbunan
Silicone

Temperature range:
-40°C to 105°C
When used with accessories please mind the respective accessory temperature data.

Colour(s)/Designs:
- black
- Special plug on request

Characteristics:
- Plug also available for SEAL
- similar to VG 95234

Accessories (see chapter 5.2):
- Contacts
- Tools

Applications:
- Heavy trucks
- Agricultural machines
- Construction machines

5.2

opis	Description	boja Colour	broj artikla Art. no.	JP kom. PU pcs.
37-pol. utikač kontakti: 37 x utični ili natični Ø 1,6 mm	**37-pole plug** contacts: 37 x pin or jack contact Ø 1,6 mm	crna black	7811373	50
37-pol. priključnica kontakti: 37 x utični ili natični Ø 1,6 mm	**37-pole socket** contacts: 37 x pin or jack contact Ø 1,6 mm	crna black	7812370	50

Natični kontakti

za "nije SEAL" (za nebrtvljeni kontakt) i 3-pol. specijalne konektore

Jack contacts

for non SEAL and 3-pole Special Connectors

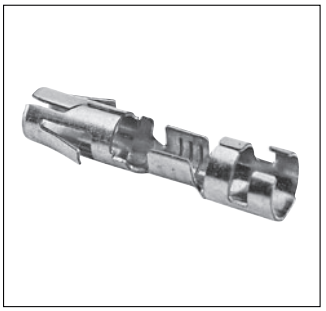

Radna temperatura:
-40°C do 130°C

Svojstva:
- jedinično opterećenje:
  kontakt Ø 1,6 mm = 13 A
  kontakt Ø 3,5 mm = 25 A
- Susjedni kontakti smiju biti opterećeni sa 50% dozvoljenog jediničnog opterećenja

Temperature range:
-40°C to 130°C

Characteristics:
- Single load capacity:
  Connector Ø 1,6 mm = 13 A
  Connector Ø 3,5 mm = 25 A
- Directly nearby contacts are to be loaded with 50 % of single load capacity.

5.2

Ø Ø	presjek vodiča Nominal cross section	kontakt broj artikla Single contact Art. no.	JP kom. PU pcs.	izolacija broj artikla Strip material Art. no	JP kom. PU pcs.
1,6 mm	0,5 - 1,0 mm²	7814009	1	7702954	4500
1,6 mm	>1,0 - 2,5 mm²	7814011	1	7814012	3500
3,5 mm	>1,0 - 2,5 mm²	7702957	1	7702959	3000
3,5 mm	>2,5 - 6,0 mm²	7814038	1	7814039	3000

Utični kontakti

za "nije SEAL" (za nebrtvljeni kontakt) i 3-pol. specijalne konektore

Pin contacts

for non SEAL and 3-pole Special Connectors

Radna temperatura:
-40°C do 130°C

Svojstva:
- jedinično opterećenje:
  kontakt Ø 1,6 mm = 13 A
  kontakt Ø 3,5 mm = 25 A
- Susjedni kontakti smiju biti opterećeni sa 50% dozvoljenog jediničnog - opterećenja

Temperature range:
-40°C to 130°C

Characteristics:
- Single load capacity:
  Connector Ø 1,6 mm = 13 A
  Connector Ø 3,5 mm = 25 A
- Directly nearby contacts are to be loaded with 50 % of single load capacity.

Ø Ø	presjek vodiča Nominal cross section	kontakt broj artikla Single contact Art. no.	JP kom. PU pcs.	izolacija broj artikla Strip material Art. no	JP kom. PU pcs.
1,6 mm	0,5 - 1,0 mm²	7815016	1	7702952	5000
1,6 mm	>1,0 - 2,5 mm²	7815018	1	7702950	3000
3,5 mm	>1,0 - 2,5 mm²	7702949	1	7815036	3000
3,5 mm	>2,5 - 6,0 mm²	7815034	1	7815035	3000

Alati za utično/natične kontakte

primjena za "nije SEAL" (nebrtvljeni kontakt)

Tools for Pin-/Jack contacts

non SEAL-Applications

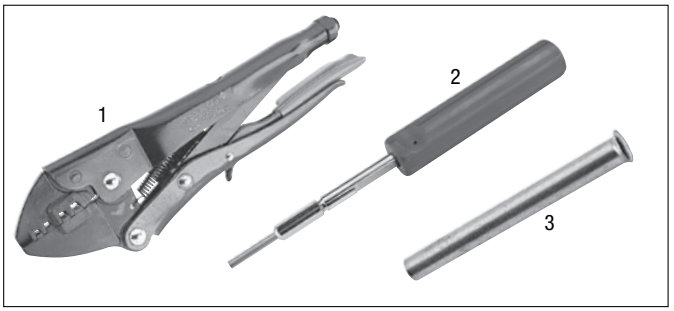

Ostali alati na upit.

Further tools on request.

opis Description	za Ø for Ø	broj artikla Art. no.	JP kom. PU pcs.
Ručna kliješta za gnječenje (1) Hand crimping pliers (1)	1,6 mm/3,5 mm	7704501	1
Alat za vađenje kontakata (2) Extraction tool (2)	1,6 mm 3,5 mm	7704497 7704489	1 1
Zamijenski naglavak na alatu za vađenje kontakata (3) Replacement sleeve for extraction tool (3)	3,5 mm	7704461	1

Specijalni konektor 3-polni

Special Connectors 3-pole

glava ravna
Straight cone

glava 90°
Angle cone

IP 67

Materijal:
Poliamid 6
Neopren
Perbunan

Radna temperatura:
-40°C do 105°C
Kada se koristi sa priborom treba uzeti u obzir podatke o radnoj temperaturi pribora

Boje/izvedbe:
- crna/siva

Svojstva:
- za rebrastu cijev NW 10
- glava ravna ili glava 90°
- sa bajonetom 10 SL
- sa navojem PG 11
- sa navojem M 18 x 1

Pribor (vidi poglavlje…) :
- kontakti (5.2)
- alati (5.2)
- brtva za pojedinačne vodiče (5.3)
- brtveni prsten (5.3)
- pričvrsna matica (5.3)
- slijepa brtva

Upotreba:
- gospodarska vozila
- poljoprivredni strojevi
- građevinski strojevi

Material:
Polyamide 6
Neoprene
Perbunan

Temperature range:
-40°C to 105°C
When used with accessories please mind the respective accessory temperature data.

Colour(s)/Designs:
- black/grey

Characteristics:
- for corrugated tube NW 10
- Straight cone or angle cone
- with bayonet 10 SL
- with thread PG 11
- with thread M 18 x 1

Accessories (see chapter…):
- Contacts (5.2)
- Tools (5.2)
- Single wire sealing (5.3)
- Clamp sealing (5.3)
- Cap nut (5.3)
- Blind plug

Applications:
- Heavy trucks
- Agricultural machines
- Construction machines

5.2

opis Description		za for	boja Colour	materijal Material	broj artikla Art. no.	JP kom. PU pcs.
	dodatno slijepa brtva **optional** Blind plug	**dodatno** **optional**		Poliamid 6 Polyamide 6	7807380	50
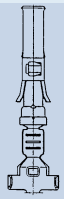	natični kontakt Jack contact	Ø 1,6 mm			7814011	1
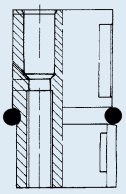	3-polno natično kućište 3-pole jack-housing		crna black	Poliamid 6 Polyamide 6	7805039	50
	O-brtva (posebno se naručuje) O-ring (order separately)			Perbunan Perbunan	8112495	1
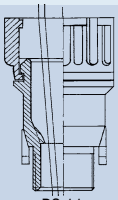 PG 11	glava ravna PG 11 sa bajonetom 10 SL Straight cone PG 11 with bayonet 10 SL		crna black	Poliamid 6 Polyamide 6	9800582	50
	glava ravna PG 11 sa navojem PG 11 Straight cone PG 11 with thread PG 11				9800591	50
	glava ravna PG 11 sa navojem M 18 x 1 Straight cone PG 11 with thread M 18 x 1				9800787	50
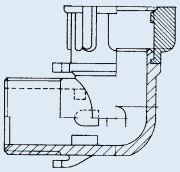 PG 11	**ili/or:** glava 90° PG 11 sa bajonetom 10 SL Angle cone PG 11 with bayonet 10 SL		crna black	Poliamid 6 Polyamide 6	9800581	50
	glava 90° PG 11 sa navojem PG 11 Angle cone PG 11 with thread PG 11				9800590	50
	glava 90° PG 11 sa navojem M 18 x 1 Angle cone PG 11 with thread M 18 x 1				9800786	50
	brtva za pojedinačne vodiče Single wire sealing		crna black	Neopren Neoprene	8113647	50
	brtveni prsten Clamp sealing	NW 10	crna black	Neopren Neoprene	8117101	50
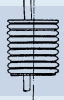	rebrasta cijev Corrugated tube	NW 10				
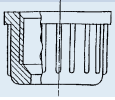	pričvrsna matica Cap nut	NW 10	siva grey	Poliamid Polyamide	9800689	50

Sklopovi za montažu specijalnog konektora 3-polnog

Assembly Packages Special Connectors 3-pole

glava ravna
Straight cone

glava 90°
Angle cone

IP 67

Materijal:
Poliamid 6
Neopren
Perbunan

Radna temperatura:
-40°C do 105°C
Kada se koristi sa priborom treba uzeti u obzir podatke o radnoj temperaturi pribora

Boje/izvedbe:
• crna/siva

Svojstva:
• glava ravna ili glava 90°
• sa bajonetom 10 SL
• za rebrastu cijev NW 10

Pribor (vidi poglavlje 5.2) :
• kontakti
• alati

Upotreba:
• gospodarska vozila
• poljoprivredni strojevi
• građevinski strojevi

Material:
Polyamide 6
Neoprene
Perbunan

Temperature range:
-40°C to 105°C
When used with accessories please mind the respective accessory temperature data.

Colour(s)/Designs:
• black/grey

Characteristics:
• Straight cone or angle cone
• with bayonet 10 SL
• for corrugated tube NW 0

Accessories (see chapter 5.2):
• Contacts
• Tools

Applications:
• Heavy trucks
• Agricultural machines
• Construction machines

5.2

stavka Item	opis Description	boja Colour	broj artikla Art. no.	JP kom. PU pcs.
sklop s glavom ravnom s bajonetom 10 SL, sastoji se od: **Assembly package straight cone with bayonet 10 SL, consisting of:**			7800063	100
1	3-polno natično kućište 3-pole jack housing	crna black	7805039	1
2	natični kontakt Jack contact		7814011	3
3	O-brtva 10 x 2,5 O-ring 10 x 2,5	crna black	8112495	1
4	brtveni prsten Clamp sealing	crna black	8117101	1
5	glava ravna PG 11 sa bajonetom 10 SL Straight cone PG 11 with bayonet 10 SL	crna black	9800582	1
6	pričvrsna matica Cap nut	siva grey	9800689	1

stavka Item	opis Description	boja Colour	broj artikla Art. no.	JP kom. PU pcs.
sklop s glavom 90° s bajonetom 10 SL, sastoji se od: **Assembly package angle cone with bayonet 10 SL, consisting of:**			7800064	100
1	3-polno natično kućište 3-pole jack housing	crna black	7805039	1
2	natični kontakt Jack contact		7814011	3
3	O-brtva 10 x 2,5 O-ring 10 x 2,5	crna black	8112495	1
4	brtveni prsten NW 10 Clamp sealing NW 10	crna black	8117101	1
5	glava 90° PG 11 sa bajonetom 10 SL Angle cone PG 11 with bayonet 10 SL	crna black	9800581	1
6	pričvrsna matica Cap nut	siva grey	9800689	1

Specijalni konektor sa navojem M 24x1 2-/3-polni

Special Connectors with Thread M 24 x 1 2-/3-pole

glava ravna
Straight cone

glava 90°
Angle cone

IP 67

Materijal:
Poliamid 6
Neopren

Radna temperatura:
-40°C do 105°C
Kada se koristi sa priborom treba uzeti u obzir podatke o radnoj temperaturi pribora

Boje/izvedbe:
- crna/siva
- sklopovi za montažu od 100 kom na upit
- *) izolacija na upit

Svojstva:
- za rebrastu cijev NW 10
- glava ravna ili glava 90°
- sa navojem M 24 x 1

Pribor (vidi poglavlje…):
- kontakti
- alati
- brtva
- brtva za pojedinačne vodiče (5.3)
- brtveni prsten (5.3)
- pričvrsna matica (5.3)

Upotreba:
- gospodarska vozila
- poljoprivredni strojevi
- građevinski strojevi

Material:
Polyamide 6
Neoprene

Temperature range:
-40°C to 105°C
When used with accessories please mind the respective accessory temperature data.

Colour(s)/Designs:
- black/grey
- Assembly packages from 100 pcs on request
- *) stripmaterial on request

Characteristics:
- for corrugated tube NW 10
- Straight cone or angle cone
- with thread M 24 x 1

Accessories (see chapter…):
- Contacts
- Tools
- Sealings
- Single wire sealings (5.3)
- Clamp sealing (5.3)
- Cap nut (5.3)

Applications:
- Heavy trucks
- Agricultural machines
- Construction machines

5.2

opis Description		za for	boja Colour	materijal Material	broj artikla Art. no.	JP kom. PU pcs.
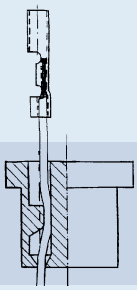	kontakt za gnječenje Ø 4 mm Crimp contact Ø 4 mm	2-polni 2-pole			7702973 *)	1
	kontakt za lemljenje Ø 4 mm Solder contact Ø 4 mm	3-polni 3-pole			7702965	1
	brtva Sealing	2-polna 2-pole	crna black	Neopren Neoprene	7800592	50
		3-polna 3-pole	crna black	Neopren Neoprene	7800593	50
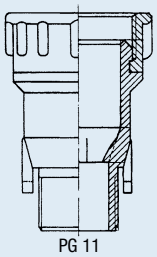 PG 11	glava ravna PG 11 sa navojem M 24 x 1 Straight cone PG 11 with thread M 24 x 1		crna black	Poliamid 6 Polyamide 6	9800557	50
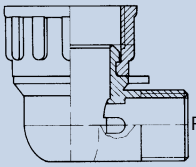 PG 11	**ili/or:** glava 90° PG 11 sa navojem M 24 x 1 Angle cone with thread M 24 x 1		crna black	Poliamid 6 Polyamide 6	9800999	50
	brtva za pojedinačne vodiče Single wire sealing		crna black	Neopren Neoprene	8113647	50
	brtveni prsten Clamp sealing		crna black	Neopren Neoprene	8117101	50
	rebrasta cijev Corrugated tube	NW 10				
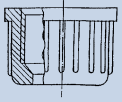	pričvrsna matica Cap nut	NW 10	siva grey	Poliamid Polyamide	9800689	50

Specijalni konektor sa navojem M 27x1 2-/3-/4-polni

Special Connectors with Thread M 27 x1 2-/3-/4-pole

glava ravna
Straight cone

glava 90°
Angle cone

IP 67

Materijal:
Poliamid 6
Neopren
mesing niklani

Radna temperatura:
-40°C do 105°C
Kada se koristi sa priborom treba uzeti u obzir podatke o radnoj temperaturi pribora

Boje/izvedbe:
- crna/siva
- sklopovi za montažu od 100 kom na upit
- *) izolacija na upit

Kennzeichen:
- glava ravna ili glava 90°
- sa navojem M 27 x 1
- za rebrastu cijev NW 10

Pribor (vidi poglavlje…) :
- kontakti
- alati
- redukcija
- brtva (5.2)
- brtva za pojedinačne vodiče (5.3)
- brtveni prsten (5.3)
- pričvrsna matica (5.3)

Upotreba:
- gospodarska vozila
- poljoprivredni strojevi
- građevinski strojevi

Material:
Polyamide 6
Neoprene
brass nickel-plated

Temperature range:
-40°C to 105°C
When used with accessories please mind the respective accessory temperature data.

Colour(s)/Designs:
- black/grey
- Assembly packages from 100 pcs on request
- *) stripmaterial on request

Characteristics:
- Straight cone or angle cone
- with thread M 27 x 1
- for Corrugated tube NW 10

Accessories (see chapter…):
- Contacts
- Tools
- Reduction
- Sealing (5.2)
- Single wire sealing (5.3)
- Clamp sealing (5.3)
- Cap nut (5.3)

Applications:
- Heavy trucks
- Agricultural machines
- Construction machines

5.2

opis Description		za for	boja Colour	materijal Material	broj artikla Art. no.	JP kom. PU pcs.
	dodatno redukcija **optional** Reduction	**dodatno** M 27/M 24 **optional** M 27/M 24		mesing niklani brass nickel-plated	6100333	50
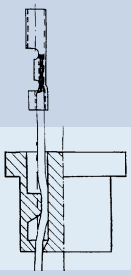	kontakt za gnječenje Crimp contact	2-/4-polni 2-/4-pole			7702973 *)	1
	kontakt za lemljenje Solder contact	3-polni 3-pole			7702965	1
	brtva Sealing	2-polna 2-pole	crna black	Neopren Neoprene	7800665/7800711	50
		3-polna 3-pole	crna black	Neopren Neoprene	7800673	50
		4-polna 4-pole	crna black	Neopren Neoprene	7800681	50
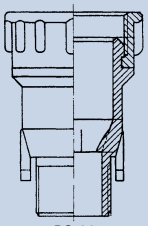 PG 11	glava ravna PG 11 sa navojem M 27 x 1 Straight cone PG 11 with thread M 27 x 1		crna black	Poliamid 6 Polyamide 6	9800794	50
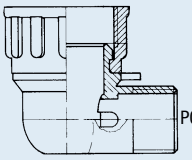 PG 11	**ili/or:** glava 90° PG 11 sa navojem M 27 x 1 Angle cone PG 11 with thread M 27 x 1		crna black	Poliamid 6 Polyamide 6	9800808	50
	brtva za pojedinačne vodiče Single wire sealing		crna black	Neopren Neoprene	8113647	50
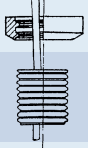	brtveni prsten Clamp sealing	NW 10	crna black	Neopren Neoprene	8117101	50
	rebrasta cijev Corrugated tube	NW 10				
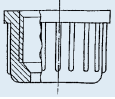	pričvrsna matica Cap nut	NW 10	siva grey	Poliamid Polyamide	9800689	50

Specijalni konektor sa bajonetom 2-/3-/4-polni

Special Connectors with Bayonet 2-/3-/4-pole

glava ravna
Straight cone

glava 90°
Angle cone

IP 67

Materijal:
Poliamid 6
Neopren
Radna temperatura:
-40°C do 105°C
Kada se koristi sa priborom treba uzeti u obzir podatke o radnoj temperaturi pribora

Boje/izvedbe:
- crna/siva
- sklopovi za montažu od 100 kom na upit
- *) izolacija na upit

Svojstva:
- glava ravna ili glava 90°
- sa bajonetom 16S
- za rebrastu cijev NW 10

Pribor (vidi poglavlje…) :
- kontakti
- alati
- brtva (5.2)
- brtva za pojedinačne vodiče (5.3)
- brtveni prsten (5.3)
- pričvrsna matica (5.3)

Upotreba:
- gospodarska vozila
- poljoprivredni strojevi
- građevinski strojevi

Material:
Polyamide 6
Neoprene
Temperature range:
-40°C to 105°C
When used with accessories please mind the respective accessory temperature data.

Colour(s)/Designs:
- black/grey
- Assembly packages from 100 pcs on request
- *) stripmaterial on request

Characteristics:
- Straight cone or angle cone
- with bayonet 16S
- for corrugated tube NW 10

Accessories (see chapter…):
- Contacts
- Tools
- Sealing (5.2)
- Single wire sealing (5.3)
- Clamp sealing (5.3)
- Cap nut (5.3)

Applications:
- Heavy trucks
- Agricultural machines
- Construction machines

5.2

opis Description		za for	boja Colour	materijal Material	broj artikla Art. no.	JP kom. PU pcs.
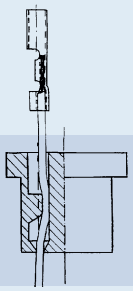	kontakt za gnječenje Crimp contact	2-/4-polni 2-/4-pole			7702973 *)	1
	kontakt za lemljenje Solder contact	3-polni 3-pole			7702965	1
	brtva Sealing	2-polna /2-pole	crna black	Neopren Neoprene	7800630/7800704	500
		3-polna /3-pole	crna black	Neopren Neoprene	7800622	500
		4-polna /4-pole	crna black	Neopren Neoprene	7800615/7800738	500
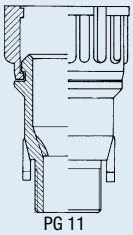 PG 11	glava ravna PG 11 sa bajonetom 16 S Straight cone PG 11 with bayonet 16 S		crna black	Poliamid 6 Polyamide 6	9800611	50
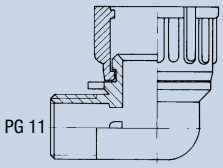 PG 11	**ili/or:** glava 90° PG 11 sa bajonetom 16 S Angle cone PG 11 with bayonet 16 S		crna black	Poliamid 6 Polyamide 6	9800603	50
	brtva za pojedinačne vodiče Single wire sealing		crna black	Neopren Neoprene	8113647	50
	brtveni prsten Clamp sealing	NW 10	crna black	Neopren Neoprene	8117101	50
	rebrasta cijev Corrugated tube	NW 10				
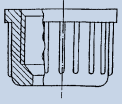	pričvrsna matica Cap nut	NW 10	siva grey	Poliamid Polyamide	9800689	50

Brtve
za specijalne konektore

Sealings
for Special Connectors

brtva sa 2 otvora
2-hole sealing

brtva sa 3 otvora
3-hole sealing

brtva sa 4 otvora
4-hole sealing

IP 67

Materijal:
Neopren

Radna temperatura:
-40°C do 105°C

Boje/izvedbe:
• crna

Svojstva:
• za vodiče FLRY i FLY

Material:
Neoprene

Temperature range:
-40°C to 105°C

Colour(s)/Designs:
• black

Characteristics:
• for wires FLRY and FLY

5.2

opis Description	za for	izvedba Type	Z mm Z mm	broj artikla Art. no.	JP kom. PU pcs.
brtva sa 2 otvora 2-hole sealing 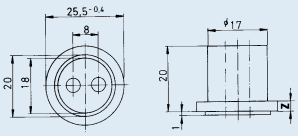	glava ravna ili glava 90° sa navojem M 27 x 1 Straight cone or angle cone with thread M 27 x 1	2 x jednostruko upleten kabel 2 x Single-cable crimping	3,5	7800665	500
	glava ravna ili glava 90° sa bajonetom 16S Straight cone or angle cone with bayonet 16S		5,5	7800630	500
brtva sa 2 otvora 2-hole sealing 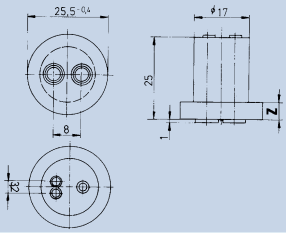	glava ravna ili glava 90° sa navojem M 27 x 1 Straight cone or angle cone with thread M 27 x 1	1 x jednostruko upleten kabel 1 x dvostruko upleten kabel 1 x Single-cable crimping 1 x Double-cable crimping	3,5	7800711	500
	glava ravna ili glava 90° sa bajonetom 16S Straight cone or angle cone with bayonet 16S		5,5	7800704	500
brtva sa 3 otvora 3-hole sealing 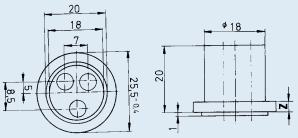	glava ravna ili glava 90° sa navojem M 27 x 1 Straight cone or angle cone with thread M 27 x 1	3 x jednostruko upleten kabel 3 x Single-cable crimping	3,5	7800673	500
	glava ravna ili glava 90° sa bajonetom 16S Straight cone or angle cone with bayonet 16S		5,5	7800622	500
brtva sa 4 otvora 4-hole sealing 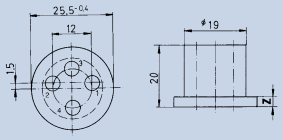	glava ravna ili glava 90° sa navojem M 27 x 1 Straight cone or angle cone with thread M 27 x 1	4 x jednostruko upleten kabel 4 x Single-cable crimping	3,5	7800681	500
	glava ravna ili glava 90° sa bajonetom 16S Straight cone or angle cone with bayonet 16S		5,5	7800615	500
brtva sa 4 otvora 4-hole sealing 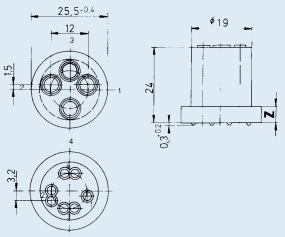	glava ravna ili glava 90° sa bajonetom 16S Straight cone or angle cone with bayonet 16S	1 x jednostruko upleten kabel 3 x dvostruko upleten kabel 1 x Single-cable crimping 3 x Double-cable crimping	5,5	7800738	500

ABS/EBS/15-pol. konektor

ABS/EBS/15-pole Connectors

utikač
Plug

priključnica
Socket

Materijal:
Poliamid ojačan staklenim vlaknima
Metalni dijelovi: nehrđajući čelik
Dijelovi kontakta: legura bakra, sa površinskom obradom

Radna temperatura:
-40°C do 110°C

Svojstva:
- 5-/7-polni: prema ISO 7638/4091
- 15-polni: prema ISO 12098/4091
- zaštita od izvlačenja kabela (na utikaču)

Kontakti:
- životni vijek: 10.000 ciklusa

Upotreba:
- gospodarska vozila

Material:
Polyamide glassfibre reinforced
Metal parts: stainless steel
Contact parts: copper alloy with surface treatment

Temperature range:
-40°C to 110°C

Characteristics:
- 5-/7-pole acc. to ISO 7638/4091
- 15-pole acc. to ISO 12098/4091
- Cable kink protection (at plug)

Contacts:
- Live cycle: 10,000 cycles

Applications:
- Heavy trucks

5.2

opis Description	oprema Equipment	broj artikla Art. no.	JP kom PU pcs.
ABS utikač / ABS plug	(3x1,5 mm²) + (2x4/6 mm²)	7705544 *	50
EBS utikač / EBS plug	(5x1,5 mm²) + (2x4 mm²)	7705549 *	50
15-polni utikač / 15-pole plug	(12x1,5 mm²) + (3x2,5 mm²)	7705204 *	50
ABS priključnica / Socket ABS	(3x1,5 mm²) + (2x4/6 mm²)	7705543	50
EBS priključnica / Socket EBS	(5x1,5 mm²) + (2x4 mm²)	7705541	50
15-polna priključnica / Socket 15-pole	(12x1,5 mm²) + (3x2,5 mm²)	7705208 *	50

kompleti za sastavljanje na upit / Grouping options on request
* kontakti se naručuju posebno / Contacts to be ordered separately

ABS-parking priključnica

ABS Parking Socket

Materijal:
Poliamid ojačan staklenim vlaknima

Radna temperatura:
-40°C do 110°C

Svojstva:
- prema ISO 7638/12098/4091
- metalni dijelovi od nehrđajućeg čelika
- glatki poklopac štiti od ozljeda
- unutarnja opruga poklopca zaštićena je od oštećenja
- parking priključnica štiti utikač od prodora vode i prašine kad prikolica nije priključena na vučno vozilo.

Upotreba:
- gospodarska vozila

Material:
Polyamide glassfibre reinforced

Temperature range:
-40°C to 110°C

Characteristics:
- Acc. to ISO 7638/12098/4091
- Metal parts are made of stainless steel
- Smooth cap avoids injures
- Inner cap spring is protected against damages
- Parking socket for dust and waterproof saving of the plug while the trailer is not connected with the traction vehicle.

Applications:
- Heavy trucks

opis Description	broj artikla Art. no.	JP kom. PU pcs.
ABS-parking priključnica / ABS Parking socket	7705569	50

Zamjenski kontakti

Replacement Contacts

utični kontakt / Pin contact — natični kontakt, uvrnut / Jack contact turned — natični kontakt, smotan / Jack contact rolled

Materijal:
na upit

Radna temperatura:
-40°C do 110°C

Svojstva:
sklopovi za montažu na upit

Material:
On request

Temperature range:
-40°C to 110°C

Characteristics:
Assembly packages on request

5.2

tip / Type	tip / Type mm²	presijek kabela / Cable cross-section	veliko pakiranje / Large pack broj artikla / Art. no.	JP kom / PU pcs.	malo pakiranje / Small pack broj artikla / Art. no.	JP kom / PU pcs.	priključnice / Sockets ABS 7705543 / ABS 7705543	EBS 7705541 / EBS 7705541	15-pol. 7705208 / 15-pole 7705208	napomene / Remarks
utični kontakt	uvrnut	1,0	7702980	3.000					*	*opcionalno, po narudžbi / Optional, custom
Pin contact	Turned		7702990				*	*		*opcionalno, po narudžbi / Optional, custom
		1,5	7702976	6.000					12	
			7702991				3	5		
		2,5	7702979	3.000					3	
		4,0	7702993				*	2		*opcionalno, po narudžbi / Optional, custom
		6,0	7702994				2			

tip / Type	tip / Type mm²	presijek kabela / Cable cross-section	veliko pakiranje / Large pack broj artikla / Art. no.	JP kom / PU pcs.	malo pakiranje / Small pack broj artikla / Art. no.	JP kom / PU pcs.	priključnice / Sockets ABS 7705544 / ABS 7705544	EBS 7705549 / EBS 7705549	15-pol. 7705204 / 15-pole 7705204	napomene / Remarks
natični kontakt	uvrnut	1,0	9530178	4.500			*	*	*	*opcionalno, po narudžbi / Optional, custom
Jack contact	Turned	1,5	9530177	6.000	7800784	50	3*	5*	12*	*alternativa za art. / Alternative to Art. 7702974
		2,5	9530179						3*	*alternativa za art. / Alternative to Art. 7702974
		4,0	9530184	2.400	7800786	30	2*			*alternativa za art. / Alternative to Art. 7702975
										i /and 9530185
								2*		*alternativa za art. / Alternative to Art. 7702975
		6,0	9530185	1.000	7800785	30	2*			*alternativa za art. / Alternative to Art. 7702975
										i /and 9530184
natični kontakt	smotan (uski pleteni materijal)	1,5 - 2,5	7702974	1.500			3*	5*		*alternativa za art. / Alternative to Art. 9530177
Jack contact	Rolled (as narrow braid material)								15*	*alternativa za art. / Alternative to Art. 9530177
										i /and 9530179
		4,0 - 6,0	7702975	1.250			2*			*alternativa za art. / Alternative to Art. 9530184
										i /and 9530185
								2*		*alternativa za art. / Alternative to Art. 9530184

ostali kontakti na upit / Further contacts on request.

ABS/EBS/15-polni spiralni kabel

ABS/EBS/15-pole Spiral Conduits

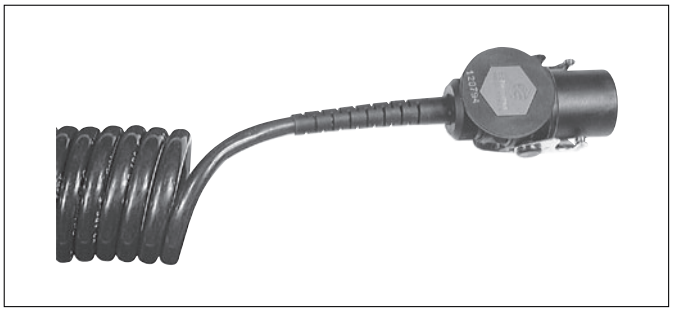

Materijal:
izolacija spiralnog kabela: Hytrel
kućište utikača:
Poliamid ojačan staklenim vlaknima
Metalni dijelovi: nehrđajući čelik
Dijelovi kontakta: legura bakra
sa površinskom obradom

Radna temperatura:
-40°C do 110°C

Svojstva:
- prema ISO 4091/4141/7638/12098
- jednostavno spajanje zbog zapornog mehanizma
- sa zaštitom od izvlačenja kabela

Upotreba:
- gospodarska vozila

Material:
Spiral cable outer cover: Hytrel
Plug housing: Polyamide glassfibre reinforced
Metal parts: stainless steel
Contact parts: copper alloy with surface treatment

Temperature range:
-40°C to 110°C

Characteristics:
- Acc. to ISO 4091/4141/7638/12098
- Easy mounting because of locking mechanism
- With cable-kink-protection

Applications:
- Heavy trucks

5.2

opis	Description	Vanjski promjer spiralnog kabela Ø Spiral outer Ø	max. duljina max. length	broj zavoja cca. turns approx.	broj artikla Art. no.	JP kom. PU pcs.
ABS-spiralni kabel 3x1,5 mm², 2x4 mm²	**ABS spiral conduit** 3x1,5 mm², 2x4 mm²	100 mm	3500 mm	17	9500099	1
EBS-spiralni kabel 5x1,5 mm², 2x4 mm²	**EBS spiral conduit** 5x1,5 mm², 2x4 mm²	100 mm	4000 mm		9500100	1
spiralni kabel 15-polni 12x1,5 mm², 3x2,5 mm²	**spiral conduit 15-pole** 12x1,5 mm², 3x2,5 mm²	110 mm	4000 mm	19	9500020	1

ADR-GGVS pribor

ADR-GGVS Accessories

	stranica		page
Tijelo uvodnice	52	Screw-in-Sockets	52
Prijelazni komad za utikač i T-uvodnicu	53	Transition Pieces for Plugs and T-Glands	53
Luk 90°	53	90°-Angles	53
Prijelaz	54	Adaptors	54
Zaštitna kapa i pričvrsna matica	55	Cap Nuts	55
Zaporni prsten	56	Locking Rings	56
Redukcija	56	Reducers	56
Matica	57	Locknuts	57
Brtva plosnata	57	Flat Sealings	57
Uložak za brtvljenje	58	Sealing Insert	58
Brtva za kabel	58	Sealing Buffers	58
Brtva za pojedinačne vodiče	59	Single Wire Sealings	59
Brtveni prsten	59	Clamp Sealings	59
Brtvena ploča	60	Sealing Plates	60
Pritisna ploča	61	Pressure Plates	61
Ploča za centriranje	62	Center Plates	62
Obujmice za zaštitu vodiča	63	Secondary Lockings	63
Zaštitne kape	64	Dust Caps	64

Tijelo uvodnice

Screw-in-Sockets

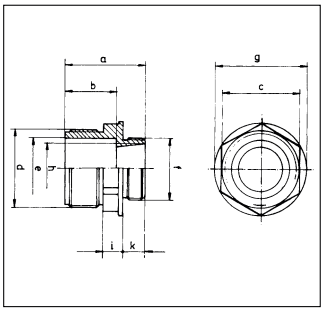

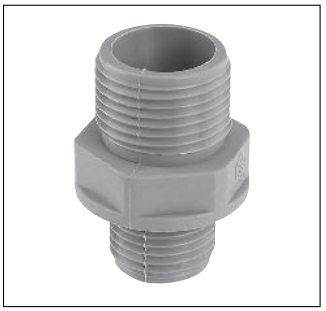

Materijal:
Poliamid

Radna temperatura:
-40°C do 120°C

Boje/izvedbe:
• siva

Material:
Polyamide

Temperature range:
-40°C to 120°C

Colour(s)/Designs:
• grey

5.3

d d	SW SW	e e	h h	a a	b b	i i	k d	g g	f f	broj artikla Art. no	JP kom. PU pcs.
PG 11	22,0	14,0	11,0	28,5	15,0	8,0	8,0	24,5	PG 9	9801308	1000
PG 11	18,3	13,7	11,0	30,0	17,0	8,0	8,0	21,5	PG 9	9800751	1500
PG 11	19,0	14,0	14,0	30,0	17,0	8,0	8,0	24,5	PG 11	9801340	1000
PG 11	22,0	13,7	11,0	33,0	16,0	8,0	12,0	24,5	PG 9	9801260	100
PG 21,8 x 1,41	21,5	17,0	14,0	28,0	16,9	6,0	8,0	24,7	PG 11	9800972	100
PG 21,8 x 1,41	22,0	17,0	14,0	31,0	16,2	6,0	12,4	24,7	PG 11	9801278	1000
PG 26,2 x 1,41	24,0	21,0	21,0	41,0	15,0	9,5	17,0	36,0	3/4"	9801065	500
PG 26,2 x 1,41	27,0	21,5	17,0	27,5	16,5	6,0	8,0	30,0	PG 16	9800778	na upit / on request
PG 26,2 x 1,41	27,0	21,5	17,0	32,0	17,8	5,2	12,0	30,0	PG 16	9801859	1000
PG 26,2 x 1,41	32,0	21,0	26,0	41,5	15,2	9,8	17,5	42,0	1"	9801073	500
M 35 x 1,75	40,0	26,5	23,0	37,0	24,5	9,0	10,0	46,0	PG 21	9800921	na upit / on request
M 35 x 1,75	36,0	26,5	25,0	41,0	24,5	9,0	14,1	41,5	PG 21	9800867	500
M 35,8 x 1,75	36,0	29,0	23,0	36,5	23,5	9,0	10,0	41,5	PG 21	9801243	na upit / on request
M 42 x 2,0	45,0	35,0	30,0	36,5	23,5	9,0	10,0	51,5	PG 29	9801189	200
M 42 x 2,0	45,0	34,5	29,5	40,5	23,5	9,0	14,0	51,5	PG 29	9801286	500

Tijelo uvodnice PG 11

Screw-in-Socket PG 11

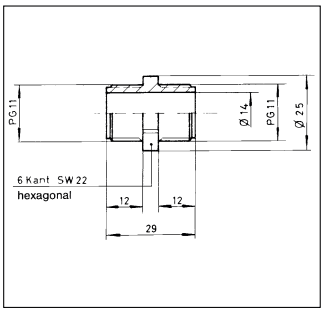

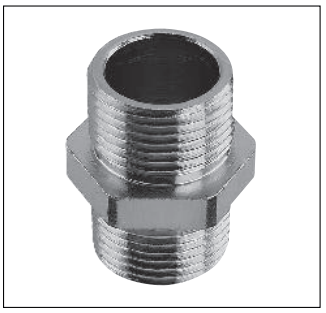

Materijal:
mesing niklani

Radna temperatura:
-40°C do 120°C

Upotreba:
• 2 x PG 11 za spajanje rebrastih cijevi NW10 ili za pričvršćivanje direktno na stražnja svjetla itd.

Material:
brass, nickel plated

Temperature range:
-40°C to 120°C

Applications:
• 2 x PG 11 for connection of corrugated tubes NW 10 or to screw in rear lamps etc.

broj artikla Art. no.	JP kom. PU pcs.
9800930	50

Prijelazni komad

za utikač i T-uvodnicu

Transition Pieces

for Plugs and T-Glands

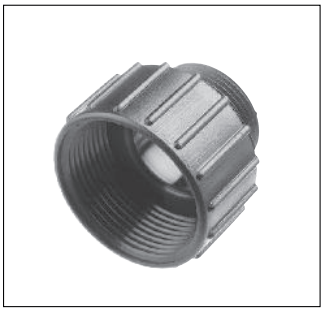

Materijal:
Poliamid 6/66
Polikarbonat

Radna temperatura:
-40°C do 120°C

Boje/izvedbe:
• crna, siva, žuta, zelena
siva boja: artikl se razlikuje od prikazanog na slici

Material:
Polyamide 6/66
Polycarbonate

Temperature range:
-40°C to 120°C

Colour(s)/Designs:
• black, grey, yellow, green
Colour grey: Article differs from picture

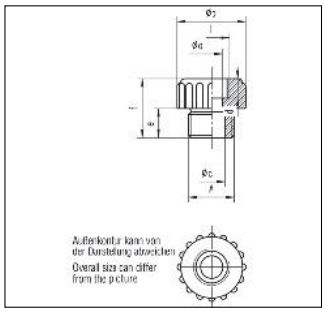

l l	A A	Ø a Ø a	Ø b Ø b	Ø c Ø c	d d	e e	f f	materijal Material	boja Colour	broj artikla Art. no.	JP kom PU pcs.
M 35 x 1,75	PG 26,2 x 1,41	16,0	41,0	22,0	17,0	13,0	34,0	PA6	žuta/yellow	9801079	1000
M 35 x 1,75	PG 26,2 x 1,41	16,0	41,0	22,0	17,0	13,0	34,0	PA6	zelena/green	9801080	1000
M 35 x 1,75	PG 26,2 x 1,41	16,0	41,0	22,0	17,0	13,0	34,0	PA6	crna/black	9801081	1000
M 35 x 1,75	PG 26,2 x 1,41	22,0	41,0	22,0	17,0	13,0	34,0	PA6	crna/black	9801082	1000
PG 11	PG 21,8 x 1,41	14,0	24,0	17,0	13,0	15,0	30,0	PA6	crna/black	9801120	1000
PG 11	PG 21,8 x 1,41	12,0	24,0	17,0	13,0	15,0	30,0	PA6	crna/black	9801121	1000
PG 21,8 x 1,41	PG 11	11,0	26,0	13,0	13,0	13,0	30,5	PC	siva/grey	9801122	1000
PG 26,2 x 1,41	PG 11	10,3	33,7	14,3	13,0	13,5	30,3	PA6	siva/grey	9801090	500
PG 26,2 x 1,41	M 35 x 1,75	22,1	35,8	26,0	12,5	17,0	31,9	PA6	siva/grey	9801162	500
PG 26,2 x 1,41	PG 21,8 x 1,41	13,8	35,2	17,0	13,1	13,3	30,4	PA6	siva/grey	9801103	500
5/8" - 24 UNEF-2B	PG 11	10,0	24,3	14,1	7,8	13,0	26,3	PA6	siva/grey	9801006	500
3/4" - 20 UNEF-2B	PG 11	10,0	27,0	14,0	8,5	13,0	26,2	PA6	crna/black	9801111	1000
7/8" - 20 UNEF-2B	PG 11	10,2	31,5	14,0	8,5	13,0	26,6	PA6	siva/grey	9801022	500
15/16" - 20 UNEF-2B	PG 26,2 x 1,41	21,5	30,0	21,5	10,0	13,0	25,0	PA66	crna/black	9801029	100
15/16" - 20 UNEF-2B	PG 21,8 x 1,41	17,0	30,0	17,0	10,0	13,0	25,0	PA66	crna/black	9801028	100
1" - 20 UNEF-2B	PG 26,2 x 1,41	16,0	34,8	22,0	8,5	13,0	27,0	PA6	siva/grey	9801030	500
1" - 20 UNEF-2B	PG 11	10,5	34,4	14,0	12,0	13,0	29,8	PA6	siva/grey	9801014	500
1 3/16" - 18 UNEF-2B	PG 11	10,0	37,7	14,0	9,0	13,5	26,5	PA6	siva/grey	9801170	500
1 3/16" - 18 UNEF-2B	PG 26,2 x 1,41	16,0	37,0	22,0	8,5	13,0	26,5	PA6	siva/grey	9801049	500
1 3/8" - 18 UNEF-2B	PG 26,2 x 1,41	16,0	41,0	22,0	17,0	13,0	34,0	PA6	crna/black	9801083	1000
1 7/16" - 18 UNEF-2B	M 35 x 1,75	22,7	43,7	26,0	8,6	15,9	29,9	PA6	siva/grey	9801057	500

5.3

Luk 90°

za 21-/35-/37-polne konektore

90°-Angles

for 21-/35-/37-pole Connectors

IP 67

Materijal:
Poliamid 6

Radna temperatura:
-40°C do 105°C

Boje/izvedbe:
• crna

Material:
Polyamide 6

Temperature range:
-40°C to 105°C

Colour(s)/Designs:
• black

opis	Description	boja Colour	broj artikla Art. no.	JP kom. PU pcs.
luk 90° M35 sa zaštitnom kapom M42 za prijelaz 34 za 21-, 35- i 37-polne konektore	**90°-angle M35 with cap nut M42 for adaptor 34** for 21-, 35- and 37-pole connectors	crna black	7807406	50
luk 90° M35 sa zaštitnom kapom M42 kurz za prijelaz 34 za 21-, 35- i 37-polne konektore	**90°-angle M35 with cap nut M42 short for adaptor 34** for 21-, 35- and 37-pole connectors	crna black	7807408	50

Prijelaz

Adaptors

IP 67

Materijal:
Poliamid 66
30 % ojačan staklenim vlaknima

Radna temperatura:
-40°C do 105°C

Boje/izvedbe:
• crna

Material:
Polyamide 66
30 % glassfibre reinforced

Temperature range:
-40°C to 105°C

Colour(s)/Designs:
• black

opis	Description	boja Colour	broj artikla Art. no.	JP kom. PU pcs.
prijelaz 16-pol. **za ne-SEAL konektore** odgovara za rebrastu cijev NW 22	**Adaptor 16-pole** **for non SEAL connectors** suitable for corrugated tube NW 22	crna black	7807163	50

prijelaz 21-/35-/37-pol. **za utikač i priključnicu**	**Adaptor 21-/35-/37-pole** **for plug and socket**	crna black		
prijelaz 21 NW 17	Adaptor 21 NW 17		7807259	50
prijelaz 26 NW 22	Adaptor 26 NW 22		7807260	50
prijelaz 34 NW 29	Adaptor 34 NW 29		7807341	50

Zaštitna kapa PG 11

Cap Nuts PG 11

Materijal:
Poliamid

Radna temperatura:
-40°C do 120°C

Boje/izvedbe:
- siva
- zatvorena

Upotreba:
- za zatvaranje uvodnica (npr. za zaštitu od prašine)

Material:
Polyamide

Temperature range:
-40°C to 120°C

Colour(s)/Designs:
- grey
- closed

Applications:
- to close cable glands, (e.g. dust protection)

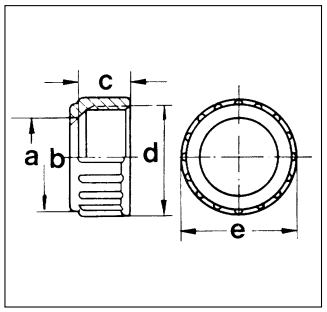

a a	b b	c c	d d	e e	broj artikla Art. no.	JP kom. PU pcs.
zatvorena/closed	22,0	14,0	PG 11	25,0	9800891	1

5.3

Pričvrsna matica

Cap Nuts

Materijal:
Poliamid

Radna temperatura:
-40°C do 120°C

Boje/izvedbe:
- siva

Pribor (vidi poglavlje 5.3) :
- zaporni prsten

Material:
Polyamide

Temperature range:
-40°C to 120°C

Colour(s)/Designs:
- grey

Accessories (see chapter 5.3):
- Locking ring

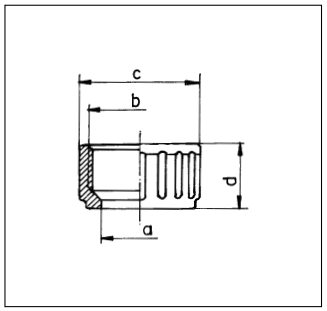

za NW standardni profil for NW normal profile	a a	b b	c c	d d	broj artikla Art. no.	JP kom. PU pcs.
8,5	11,5	PG 11	24,5	15,5	9801324	1000
10	13,5	PG 11	24,5	18,0	9800689	2000
13	17,0	PG 21,8 x 1,41	27,0	16,0	9800956	1000
17	21,5	PG 26,2 x 1,41	32,0	18,5	9800697	1000
22	26,5	M 35 x 1,75	41,5	21,5	9800905	700
23	28,5	M 35,8 x 1,75	41,0	21,0	9801251	50
29	34,5	M 42 x 2,00	47,0	21,5	9801138	350

Zaporni prsten

Locking Rings

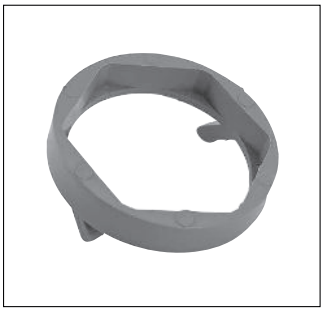

Materijal:
Poliamid

Radna temperatura:
-40°C do 120°C

Boje/izvedbe:
• siva

Upotreba:
• za pričvrsnu maticu
(vidi poglavlje 5.3)

Material:
Polyamide

Temperature range:
-40°C to 120°C

Colour(s)/Designs:
• grey

Applications:
• for cap nuts
(see chapter 5.3)

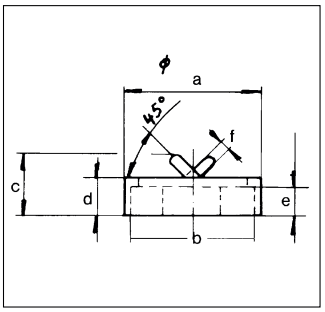

a a	b b	c c	d d	e e	f f	broj artikla Art. no.	JP kom. PU pcs.
24,0	19,3	11,0	7,0	6,0	2,0	8118094	5000
27,0	22,0	9,0	5,0	4,0	2,0	8118132	5000
32,0	27,0	9,0	5,0	4,0	2,0	8118175	1000
42,0	36,0	12,0	8,0	7,0	2,0	8118221	1500

5.3

Redukcija

Reducers

Materijal:
Polikarbonat

Radna temperatura:
-40°C do 120°C

Boje/izvedbe:
• siva

Material:
Polycarbonate

Temperature range:
-40°C to 120°C

Colour(s)/Designs:
• grey

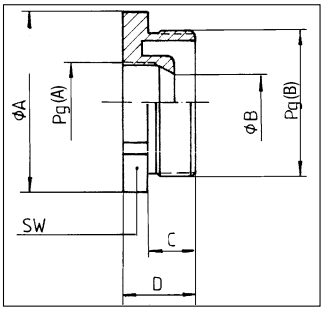

Ø A Ø A	Pg (A) Pg (A)	Ø B Ø B	Pg (B) Pg (B)	SW SW	C C	D D	broj artikla Art. no.	JP kom. PU pcs.
24,0	7	7,5	11	22,0	8,0	13,0	7005016	50
26,5	7	7,5	13,5	24,0	9,0	14,0	7005024	50
26,5	9	9,3	13,5	24,0	9,0	12,0	7005032	50
29,75	9	9,1	16	27,0	9,0	14,0	7005040	50
29,75	11	11,1	16	27,0	9,0	14,0	7005059	50
35,0	11	11,1	21	32,0	11,0	16,0	7005067	25
35,0	13,5	13,1	21	32,0	11,0	16,0	7005075	25
35,0	16	15,7	21	32,0	11,0	16,0	7005202	25
45,0	13,5	14,2	29	41,0	12,0	18,5	7005083	25
45,0	16	17,0	29	41,0	12,0	18,5	7005091	25
45,0	21	20,0	29	41,0	12,0	18,0	7005210	25

Matice

Locknuts

Materijal:
Polikarbonat

Radna temperatura:
-40°C do 120°C

Boje/izvedbe:
• siva

Material:
Polycarbonate

Temperature range:
-40°C to 120°C

Colour(s)/Designs:
• grey

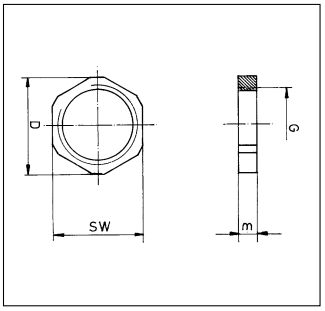

SW SW	navoj Thread	m m	D D	broj artikla Art. no.	JP kom. PU pcs.
15,0	PG 7	4,5	16,5	7001070	50
19,0	PG 9	4,5	21,0	7001096	50
22,0	PG 11	5,0	24,0	7001118	50
24,0	PG 13,5	5,5	26,0	7001134	50
27,0	PG 16	6,0	30,0	7001169	50
32,0	PG 21	6,5	35,0	7001215	20
41,0	PG 29	7,5	44,0	7001290	20
55,0	PG 36	8,5	59,0	7001363	10
65,0	PG 42	9,0	71,0	7001428	5
70,0	PG 48	9,5	76,0	7001487	5

5.3

Brtva plosnata

Flat Sealings

Materijal:
Perbunan/Neopren

Radna temperatura:
-25°C do 80°C

Boje/izvedbe:
• crna

Material:
Perbunan/Neoprene

Temperature range:
-25°C to 80°C

Colour(s)/Designs:
• black

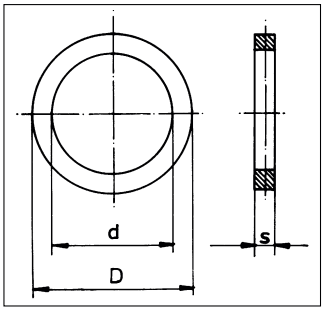

D D	d d	s s	materijal Material	broj artikla Art. no.	JP kom. PU pcs.
17,0	10,0	1,0	Perbunan	8113352	1000
17,0	12,0	2,0	Perbunan	8113416	1000
20,0	13,0	1,0	Perbunan	8113017	1000
21,0	10,0	2,0	Perbunan	8113092	po potrebi/loose
24,0	16,0	2,0	Perbunan	8113084	1000
24,0	18,0	1,0	Perbunan	9805281	1000
25,0	21,0	2,2	Neopren/Neoprene	8113424	po potrebi/loose
25,5	16,0	3,0	Perbunan	8113327	po potrebi/loose
28,0	21,0	1,0	Perbunan	8113025	1000
28,0	21,0	2,0	Perbunan	8113041	1000
34,0	16,0	2,0	Perbunan	8113319	1000
35,0	25,0	2,0	Perbunan	8113050	1000
40,0	26,0	2,0	Perbunan	8113068	1000
42,0	33,0	2,0	Neopren/Neoprene	8113010	po potrebi/loose

Uložak za brtvljenje

Sealing Insert

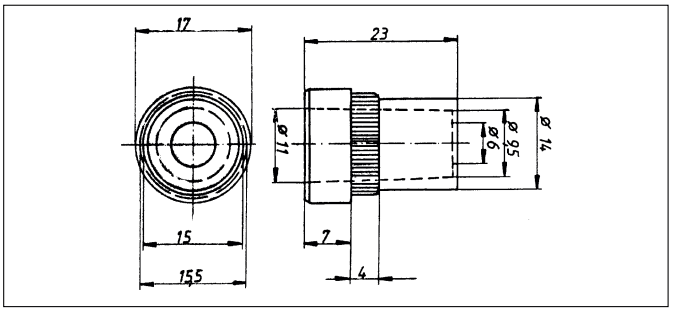

Materijal:
meki-PVC (polivinilklorid)

Radna temperatura:
-20°C do 60°C

Boje/izvedbe:
• zelena

Upotreba:
• za utično/natično kućište PG 11
• za glavu ravnu/glavu 90° PG 11
• za priključnu kutiju rezervoara (vidi poglavlje 5.4)

Material:
Soft-PVC (Polyvinylchloride)

Temperature range:
-20°C to 60°C

Colour(s)/Designs:
• green

Applications:
• for pin/jack housing PG 11
• for straight/angle cone PG 11
• for fuel junction box (see chapter 5.4)

Ø mm / Ø mm	boja / Colour	odgovara za/suitable for: 3-/5-polno utično/natično kućište sa vanjskim navojem PG 11 / 3-/5-pole pin/jack housing with external thread PG 11	priključnu kutiju rezervoara / fuel junction box	glavu ravnu/glavu 90° sa vanjskim navojem PG 11 / Straight/angle cone with external thread PG 11	broj artikla / Art. no.	JP kom. / PU pcs.
7-10,5	zelena/green	✔	✔	✔	8115605	100

5.3

Brtva za kabel

Sealing Buffers

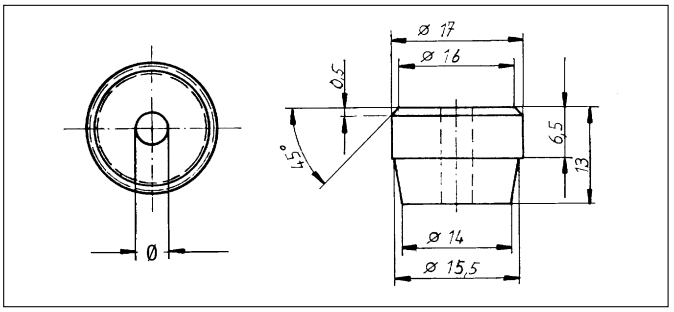

Materijal:
Neopren

Radna temperatura:
-25°C do 80°C

Boje/izvedbe:
• crna

Upotreba:
• za utično/natično kućište PG 11
• za glavu ravnu/glavu 90° PG 11

Material:
Neoprene

Temperature range:
-25°C to 80°C

Colour(s)/Designs:
• black

Applications:
• for pin/jack housing PG 11
• for straight/angle cone PG 11

promjer otvora Ø mm / drill hole Ø mm	boja / Colour	odgovara za/suitable for: 3-/5-polno utično/natično kućište sa vanjskim navojem PG 11 / 3-/5-pole pin/jack housing with external thread PG 11	glavu ravnu/glavu 90° sa vanjskim navojem PG 11 / Straight/angle cone with external thread PG 11	broj artikla / Art. no.	JP kom. / PU pcs.
4,5	crna/black	✔	✔	8115516	500
5,6	crna/black	✔	✔	8115508	500

Brtva za pojedinačne vodiče

Single Wire Sealings

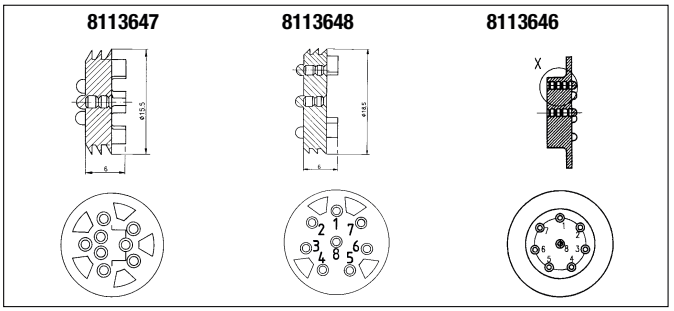

Materijal:
Neopren (CR)
Silikon (Sil)

Radna temperatura:
-40°C do 105°C

Boje/izvedbe:
- crna, crveno-smeđa
- 8 mogućih otvora

Material:
Neoprene (CR)
Silicone (Sil)

Temperature range:
-40°C to 105°C

Colour(s)/Designs:
- black, red-brown
- 8-holes with tear off nipples

Ø mm / Ø mm	boja / Colour	odgovara za/suitable for: 3-/5-polno utično/natično kućište sa vanjskim navojem PG 11 / 3-/5-pole pin/jack housing with external thread PG 11	8-polno utično kućište / 8-pole pin housing	glavu ravnU/ glavu 90° sa vanjskim navojem PG 11 / Straight/angle cone with external thread PG 11	glavu ravnu/glavu 90° sa bajonetom 16S (broj artikla 9800611/9800603) u kombinaciji sa 8-pol. natičnim kućištem (broj artikla 7805098/7805080) / Straight/angle cone with bayonet 16S (Art. no. 9800611/9800603) in combination with 8-pol. jack housing (Art. no. 7805098/7805080)	broj artikla / Art. no.	JP kom. / PU pcs.
15,5	crna/black (CR)	✔		✔	✔	8113647	50
18,5	crna/black (CR)		✔			8113648	50
27,0	crv.-smeđa/red-brown (Sil)				✔	8113646	50

5.3

Brtveni prsten

Clamp Sealings

Materijal:
Neopren

Radna temperatura:
-40°C do 105°C

Boje/izvedbe:
- crna

Material:
Neoprene

Temperature range:
-40°C to 105°C

Colour(s)/Design:
- black

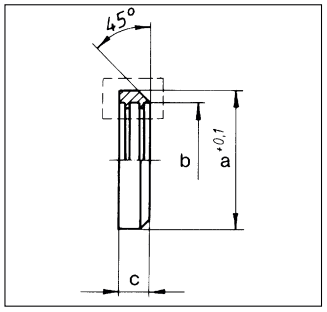

za NW standardni profil / for NW normal profile	a / a	b / b	c / c	broj artikla / Art. no.	JP kom. / PU pcs.
8,5	17,5	11,5	5,0	8117080	1000
10	17,0	12,8	6,38	8117101	1000
13	20,0	15,8	5,38	8117136	1000
17	24,5	20,5	6,64	8117179	1000
22	33,0	25,2	7,0	8117225	500
23	33,0	28,1	7,0	8117233	500
29	39,0	34,3	7,54	8117292	500

Brtvena ploča

za ne-SEAL konektore (nebrtvljeni kontakt)

Sealing Plates

for non SEAL conncectors

IP 67

Materijal:
Silikon

Radna temperatura:
-40°C do 125°C

Boje/izvedbe:
• prozirna

Svojstva:
• za ne-SEAL konektore

Material:
Silicone 30 shore

Temperature range:
-40°C to 125°C

Colour(s)/Designs:
• transparent

Features:
• for non-SEAL connectors

	opis	Description	boja / Colour	broj artikla / Art. no.	JP kom. / PU pcs.
	za 16-pol. utikač i priključnicu koristi se sa: pritisnom pločom 7810394 i prijelazom 7807163	**for 16-pole plug and socket** useable with: pressure plate 7810394 and adaptor 7807163	prozirna transparent	7810164	50
	za 21-pol. utikač i priključnicu koristi se sa: pritisnom pločom 7810393 i prijelazom: 7807259 NW 17, 7807260 NW 22, 7807341 NW 29	**for 21-pole plug and socket** useable with: pressure plate 7810393 and adaptor: 7807259 NW 17, 7807260 NW 22, 7807341 NW 29	prozirna transparent	7810210	50
	za 37-pol. utikač i priključnicu koristi se sa: pritisnom pločom 7810385 i prijelazom: 7807259 NW 17, 7807260 NW 22, 7807341 NW 29	**for 37-pole plug and socket** useable with: pressure plate 7810385 and adaptor: 7807259 NW 17, 7807260 NW 22, 7807341 NW 29	prozirna transparent	7810377	50

Pritisna ploča

za ne-SEAL konektore (nebrtvljeni kontakt)

Pressure Plates

for non SEAL conncectors

IP 67

Materijal:
Poliamid 6

Radna temperatura:
-40°C do 105°C

Boje/izvedbe:
• crna

Svojstva:
• za "nije SEAL" konektore

Material:
Polyamide 6

Temperature range:
-40°C to 105°C

Colour(s)/Designs:
• black

Features:
• for non-SEAL connectors

	opis	Description	boja Colour	broj artikla Art. no.	JP kom. PU pcs.
	za 16-pol. utikač i priključnicu koristi se sa: brtvenom pločom 7810164 i prijelazom 7807163	**for 16-pole plug and socket** useable with: sealing plate 7810164 and adaptor 7807163	crna black	7810394	50
	za 21-pol. utikač i priključnicu koristi se sa: brtvenom pločom 7810210 i prijelazom: 7807259 NW 17 7807260 NW 22 7807341 NW 29	**for 21-pole plug and socket** useable with: sealing plate 7810210 and adaptor: 7807259 NW 17 7807260 NW 22 7807341 NW 29	crna black	7810393	50
	za 37-pol. utikač i priključnicu koristi se sa: brtvenom pločom 7810377 i prijelazom: 7807259 NW 17 7807260 NW 22 7807341 NW 29	**for 37-pole plug and socket** useable with: sealing plate 7810377 and adaptor: 7807259 NW 17 7807260 NW 22 7807341 NW 29	crna black	7810385	50

Ploča za centriranje

Center Plates

IP 67

Materijal:
Polikarbonat

Radna temperatura:
-40°C do 105°C

Boje/izvedbe:
• prozirna

Material:
Polycarbonate

Temperature range:
-40°C to 105°C

Colour(s)/Designs:
• transparent

5.3

	opis	Description	boja Colour	broj artikla Art. no.	JP kom. PU pcs.
	ploča za centriranje 16-pol. za utične kontakte	**Center plate 16-pole for pin contacts**	prozirna transparent	7810400	50
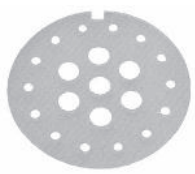	**ploča za centriranje 21-pol. za utične kontakte**	**Center plate 21-pole for pin contacts**	prozirna transparent	7810401	50
	ploča za centriranje 35-pol. za utične kontakte	**Center plate 35-pole for pin contacts**	prozirna transparent	7810403	50
	ploča za centriranje 37-pol. za utične kontakte	**Center plate 37-pole for pin contacts**	prozirna transparent	7810402	50

Obujmica za zaštitu vodiča

za 4-/5-/8-/35-polne SEAL-konektore

Secondary Lockings

for 4-/5-/8-/35-pole SEAL-Connectors

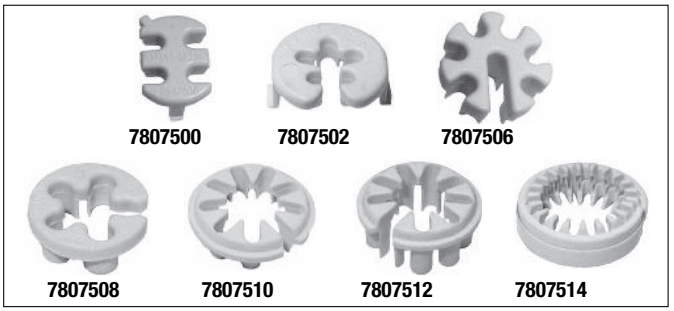

IP 67

Materijal:
Poliamid 66
30 % ojačan staklenim vlaknima

Radna temperatura:
-40°C do 105°C

Boje/izvedbe:
• žuta

Upotreba:
• posebno preporučljivi za glave 90° za zaštitu od deformiranja kablova

Material:
Polyamide 66
30 % glassfibre reinforced

Temperature range:
-40°C to 105°C

Colour(s)/Designs:
• yellow

Applications:
• particulary recommended for angle cones to prevent cables from kinking

opis	Description	boja Colour	broj artikla Art. no.	JP kom. PU pcs.
4-polne za natične kontakte	4-pole for jack contacts	žuta/ yellow	7807500	3000
5-polne za utične/natične kontakte	5-pole for pin/jack contacts	žuta/ yellow	7807502	3000
8-polne za natične kontakte	8-pole for jack contacts	žuta/ yellow	7807506	3000
35-polni unutrašnji prsten za utične/natične kontakte	35-pole inner ring for pin/jack contacts	žuta/ yellow	7807508	1000
35-polni međuprsten za natične kontakte	35-pole center ring for jack contacts	žuta/ yellow	7807510	1000
35-polni međuprsten za utične kontakte	35-pole center ring for pin contacts	žuta/ yellow	7807512	1000
35-polni vanjski prsten za utične/natične kontakte	35-pole cxternal ring for pin/jack contacts	žuta/ yellow	7807514	1000

Zaštitna kapa

za 21-/35-/37-polni utikač

Dust Cap

for 21-/35-/37-pole Plug

IP 67

Materijal:
Poliamid 6

Radna temperatura:
-40°C do 105°C

Boje/izvedbe:
• crna

Material:
Polyamide 6

Temperature range:
-40°C to 105°C

Colour(s)/Designs:
• black

opis	Description	boja Colour	broj artikla Art. no.	JP kom. PU pcs.
zaštitna kapa za 21-/35-/37-pol. utikač	**Dust Cap** for 21-/35-/37-pol. Plug	crna black	7807377	50

5.3

Zaštitna kapa komplet

za 21-/35-/37-polne priključnice

Dust Cap complete

for 21-/35-/37-pole Socket

IP 67

Materijal:
Poliamid 66
EPDM

Radna temperatura:
-40°C do 105°C

Boje/izvedbe:
• crna

Material:
Polyamide 66
EPDM

Temperature range:
-40°C to 105°C

Colour(s)/Designs:
• black

opis	Description	boja Colour	broj artikla Art. no.	JP kom. PU pcs.
zaštitna kapa komplet za 21-/35-/37-pol. priključnice sastoji se od: • zaštitne kape • pričvrsne trake • plosnate brtve 38 x 41,6 x 3,8	**Dust-Cap complete** for 21-/35-/37-pol. socket consisting of: • Dust Cap • Mounting strip • Flat sealing 38 x 41,6 x 3,8	crna black	7800342	50

Razvodne kutije + priključne kutije

Terminal Boxes + Junction Boxes

	stranica		page
Zaštitna kapa za univerzalni razvodnik	66 - 67	Dust Cap for Universal Junction Board	66 - 67
Razvodne kutije	68	Terminal Boxes	68
Razvodna kutija 7776 komplet	69	Terminal Box 7776 complete	69
Razvodna kutija 916 komplet	69	Terminal Box 916 complete	69
Umetak za brtvljenje	70 - 71	Bushings	70 - 71
Priključna kutija rezervoara	72	Fuel Tank Junction Box	72

Zaštitna kapa
za univerzalni razvodnik

Dust Cap
for Universal Junction Board

Materijal:
Poliamid 6
Neopren

Radna temperatura:
-40°C do 80°C

Boje/izvedbe:
• crna

Material:
Polyamide 6
Neoprene

Temperature range:
-40°C to 80°C

Colour(s)/Designs:
• black

opis Description	broj artikla Art. no.	JP kom. PU pcs.
zaštitna kapa za univerzalni razvodnik **Dust cap for universal junction board**	7807368	1

5.4

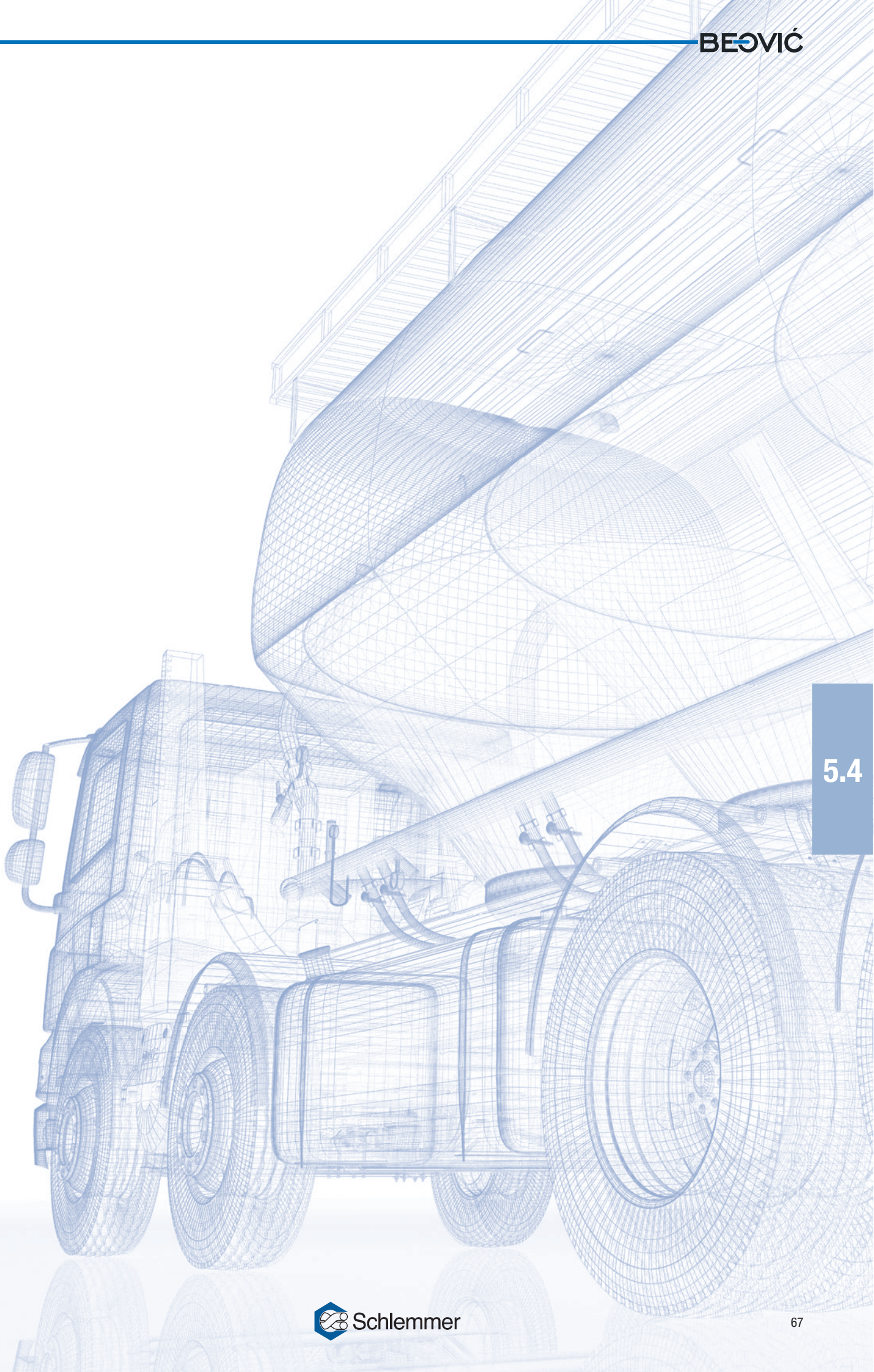

5.4

Razvodne kutije

Terminal Boxes

IP 54

Materijal:
Poliamid 6
ojačan staklenim vlaknima

Boje/izvedbe:
• crna

Svojstva:
Čvrsto i sigurno spajanje jednostavnim umetanjem i zabravljivanjem cijevi i kablova. Spojni izolatori za rebraste cijevi i kablove naručuju se posebno.

Za razvodnu kutiju ZB:
IP 54 vrijedi samo ako je pravilno montirana - priljubljeno na vertikalnu površinu.

Pribor:
• umetak za brtvljenje

Upotreba:
• gospodarska vozila
• građevinski strojevi
• specijalna vozila
• poljoprivredni strojevi

Material:
Polyamide 6
glassfibre reinforced

Colour(s)/Designs:
• black

Characteristics:
Secure and tight connection by simply plugging and snapping of hoses and cables. Connection bushes for corrugated tubes and cables must be ordered separately.

For Terminal box ZB:
IP 54 is valid only in case of proper assembly on upright, tight contact surface.

Accessories:
• Bushings

Applications:
• Heavy trucks
• Construction machines
• Special vehicle
• Agricultural machines

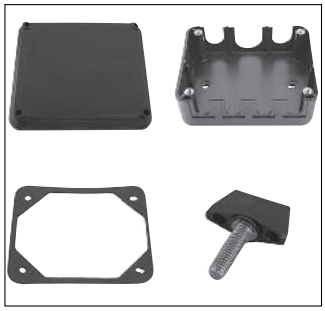

opis Description	materijal Material	broj artikla Art. no.	JP kom. PU pcs.
univerzalna razvodna kutija/ **Universal terminal box** 130 x 100 mm unutarnja dimenzija / internal za umetak za brtvljenje / for bushings 2 x A, 1 x B, 4 x C	Poliamid 6 Polyamide 6	7800509	1
poklopac Cover	Poliamid 6 Polyamide 6	7800517	1
brtva Sealing		7800525	1
Flügelschraube Wing screw		7800983	1

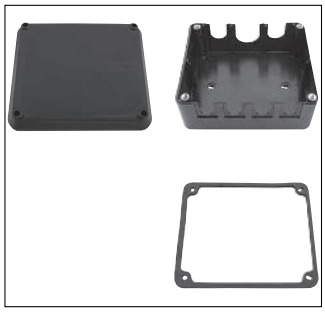

univerzalna razvodna kutija velika/ **Universal terminal box big** 144 x 124,5 mm unutarnja dimenzija / internal za umetak za brtvljenje / for bushings 2 x A, 1 x B, 4 x C	Poliamid 6 Polyamide 6	7800371	1
poklopac Cover	Poliamid 6 Polyamide 6	7800380	1
brtva Sealing		7800398	1

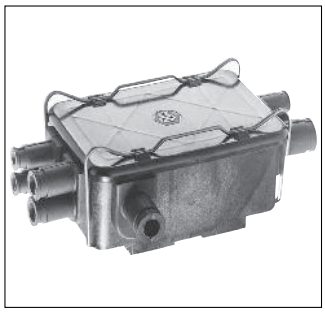

razvodna kutija ZB, komplet sa poklopcem, brtva i 2 zasuna **Terminal box ZB,** complete with cover, sealing and 2 latches	Poliamid 6 GF Polyamide 6 GF	7895000	1

Razvodna kutija 7776, komplet

Terminal Box 7776, complete

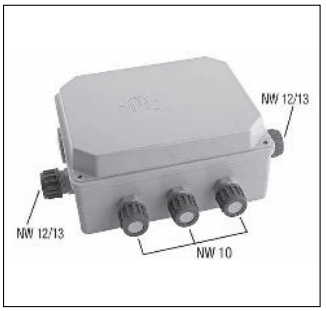

IP 66

Materijal:
Polikarbonat

Radna temperatura:
-40°C do 80°C

Boje/izvedbe:
- siva

Svojstva:
- NW 10 i NW 12/13 inkl. pričvrsna matica + brtveni prsten + slijepi utikač
- NW 17 i NW 22 su otvori za uvodnice isporučuju se zatvoreni (slijepi utikač).

Uz to, na raspolaganju je:
priključna grana za kablove
broj artikla 7800657

za spajanje rebrastih cijevi:
3 x NW 10
2 x NW 12/13
1 x NW 17
1 x NW 22

Upotreba:
- gospodarska vozila
- građevinski strojevi

Material:
Polycarbonate

Temperature range:
-40°C to 80°C

Colour(s)/Designs:
- grey

Characteristics:
- NW 10 and NW 12/13 incl. cap nut, clamp sealing and blind plug
- NW 17 and NW 22 are holes for connection glands and are delivered closed (blind plug).

Supplymentary deliverable:
cable branch terminal
Art. no.7800657

For the connection of corrugated tubes:
3 x NW 10
2 x NW 12/13
1 x NW 17
1 x NW 22

Applications:
- Heavy trucks
- Construction machines

opis Description	broj artikla Art. no.	JP kom. PU pcs.
ADR razvodna kutija komplet ADR-terminal box complete	7800347	1
odgovarajuća spojna uvodnica NW 17 suitable connection gland NW 17	7800010	1
odgovarajuća spojna uvodnica NW 22 suitable connection gland NW 22	7800029	1

Razvodna kutija 916, komplet

Terminal Box 916, complete

5.4

IP 68

Materijal:
Poliamid, ojačan staklenim vlaknima

Radna temperatura:
-40°C do 80°C

Boje/izvedbe:
- tamno zelena

Svojstva:
- ugrađena dva dvostruka 12-polna plosnata utična priključka
- uključujući kabelske uvodnice dimenzije su cca.: 265 × 145 × 120 mm
- priključnica prema DIN 72591

Upotreba:
- gospodarska vozila
- specijalna vozila

Material:
Polyamide, glassfibre reinforced

Temperature range:
-40°C to 80°C

Colour(s)/Designs:
- dark green

Characteristics:
- two 12-pole double flat pin strips 6,3 mm built in
- Dimensions incl. cable glands approx. 265 x 145 x 120 mm
- Socket acc. to DIN 72591

Applications:
- Heavy trucks
- Special vehicles

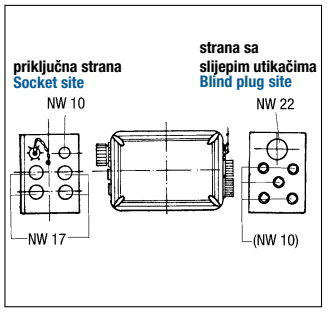

opis Description	priključna strana Socket site	strana sa slijepim utikačima Blind plug site	broj artikla Art. no.	JP kom. PU pcs.
razvodna kutija 916 komplet Terminal box 916 complete			7800401	1
	1 x priključnica 1 x Socket	5 x slijepi utikač 5 x Blind plug		
	4 x spojna uvodnica NW 17 4 x Connection gland NW 17	5 x spojna uvodnica NW 10 5 x Connection gland NW 10		
	1 x spojna uvodnica NW 10 1 x Connection gland NW 10	1 x spojna uvodnica NW 22 1 x Connection gland NW 22		

Umetak za brtvljenje
za razvodnu kutiju

Bushings
for Terminal Box

umetak za brtvljenje A / Bushing A

umetak za brtvljenje B / Bushing B

Materijal:
Polivinilklorid

Radna temperatura:
-25°C do 80°C

Boje/izvedbe:
• crna

Material:
Polyvinylchloride

Temperature range:
-25°C to 80°C

Colour(s)/Designs:
• black

opis Description	za NW standardni profil for NW normal profile	broj artikla Art. no.	JP kom. PU pcs.
umetak za brtvljenje A zatvoreni za razvodnu kutiju 7800509 ili 7800371 Bushing A closed for terminal box 7800509 or 7800371		7800606	1
umetak za brtvljenje A otvoreni za rebrastu cijev za razvodnu kutiju 7800509 ili 7800371 Bushing A open for corrugated tube for terminal box 7800509 or 7800371	10 13	7800533 7800541	1 1
umetak za brtvljenje B zatvoreni za razvodnu kutiju 7800509 ili 7800371 Bushing B closed for terminal box 7800509 or 7800371		7804016	1
umetak za brtvljenje B otvoreni za rebrastu cijev za razvodnu kutiju 7800509 ili 7800371 Bushing B open for corrugated tube for terminal box 7800509 or 7800371	17 22	7800550 7800568	1 1

Umetak za brtvljenje
za razvodnu kutiju

Bushings
for Terminal Box

umetak za brtvljenje C / Bushing C

Materijal:
Polivinilklorid

Radna temperatura:
-25°C do 80°C

Boje/izvedbe:
• crna

Material:
Polyvinylchloride

Temperature range:
-25°C to 80°C

Colour(s)/Designs:
• black

opis Description	dimenzije Dimensions	broj artikla Art. no.	JP kom. PU pcs.
umetak za brtvljenje C zatvoreni za razvodnu kutiju 7800509 ili 7800371 Bushing C closed for terminal box 7800509 or 7800371		7800584	1
umetak za brtvljenje C otvoreni za kablove sa plastičnom izolacijom za razvodnu kutiju 7800509 ili 7800371 Bushing C open for plastic sheathed cables for terminal box 7800509 or 7800371	za Ø 9,5 - 10,5 mm for Ø 9,5 - 10,5 mm	7800576	1

Umetak za brtvljenje
za razvodnu kutiju ZB

Bushings
for Terminal Box ZB

umetak za brtvljenje za razvodnu kutiju ZB
Bushing for terminal box ZB

5.4

Materijal:
Neopren

Radna temperatura:
-25°C do 80°C

Boje/izvedbe:
• crna

Material:
Neoprene

Temperature range:
-25°C to 80°C

Colour(s)/Designs:
• black

opis Description	dimenzije Dimensions	broj artikla Art. no.	JP kom. PU pcs.
umetak za brtvljenje za razvodnu kutiju ZB Bushing for terminal box ZB	zatvoreni / closed	7895006	100
	2 x 7,0 mm	7895007	100
	2 x 10,0 mm	7895008	100
	1 x 12,8 mm	7895009	100
	1 x 10,8 mm	7895010	100
	1 x 10,0 mm 1 x 7,0 mm	7895011	100

Priključna kutija rezervoara

Fuel Tank Junction Box

IP 67

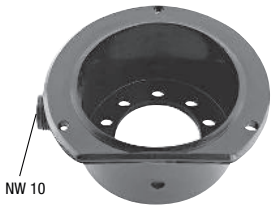

Priključna kutija rezervoara
Fuel junction box

poklopac
Cover

brtva
Sealing

Materijal:
kutija i poklopac:
Polioksimetilen (POM)
brtva:
Perbunan crni

Radna temperatura:
-25°C do 80°C

Boje/izvedbe:
- crna

Pribor (vidi poglavlje 5.3):
- uložak za brtvljenje

Upotreba:
- gospodarska vozila
- za spajanje senzora goriva u ADR-GGVS vozilima

Material:
Box and cover:
Polyoxymethylene (POM)
Sealing:
Perbunan black 43 shore

Temperature range:
-25°C to 80°C

Colour(s)/Designs:
- black

Accessories (see chapter 5.3):
- Sealing insert

Applications:
- Heavy trucks
- for junction of the fuel sensor in ADR-GGVS vehicles

5.4

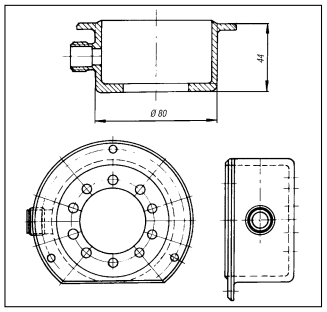

opis Description	odgovara za suitable for	broj artikla Art. no.	JP kom. PU pcs.
Priključna kutija rezervoara Fuel tank junction box	rebrasta cijev NW 10 corrugated tube NW 10	7800410	1
poklopac Cover		7800428	1
brtva Sealing		8113130	1

Elektromehaničke komponente

Electromechanical Components

	stranica		page
Prekidač akumulatora za hitne slučajeve	74	Battery Emergency Switches	74
Glavni prekidač akumulatora za hitne slučajeve	75	Battery Main Emergency Switches	75
Elektronička upravljačka jedinica glavnog prekidača akumulatora	76	Electronic Control Units for Battery Main Switches	76
Bistabilni releji	76	Bistable Relays	76
Glavni prekidač akumulatora	77	Battery Main Switch	77
Kontrolni prekidač	78	Control Switches	78
Elektronička kontrola temperature	78	Electronic Temperature Control	78
Senzori temperature	79	Temperature Transmitters	79
Senzorska sonda razine tekućina	80	Fluid Level Probes	80
Adapter	81	Screw-in-Adaptor	81
Kontrolna jedinica sustava za nadzor kočionih obloga	82	Control Device for Brake Lining Monitoring System	82
Nožni prekidač	83	Foot Switches	83
Podnaponski prekidač	84	Undervoltage Control	84
Naponski transformatori	84 - 85	Voltage Transformers	84 - 85
Stezaljke za kablove	86	Cable Clamps	86
Pomoćni kabel za pokretanje motora	87	Auxillary Starter Cable	87

Prekidač akumulatora za hitne slučajeve

Battery Emergency Switches

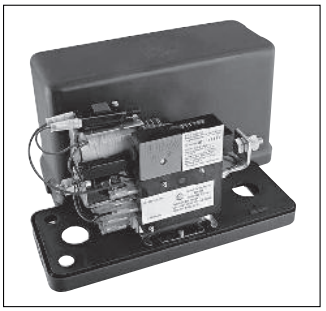

IP 54

Radna temperatura:
-40°C do 70°C

Svojstva:
- težina cca. 2,5 kg
- Za motorna vozila koja prevoze eksplozivne, opasne i zapaljive sadržaje. Sigurnosni izolirani prekidač, koji se nalazi između akumulatora i električnog sustava vozila, propisan je prema njemačkom GGVS i europskoj normi ADR. Sigurnosnim prekidačem upravlja se iz vozačke kabine.

Tehnički podaci:
Nominalni napon: 24 V
Max. stalna struja napajanja: 240 A
Kontrola strujnog kruga: (Ex)i 4-6 mA

Spajanje:
- Glavni priključak: navojni spoj M10 za prstenaste kabelske stopice
- Upravljački kablovi: plosnati izolirani utikač 6,3 x 0,8 mm

Pribor (vidi poglavlje 5.5):
- Kontrolni prekidač

Upotreba:
- gospodarska vozila koja prevoze eksplozivne, opasne i zapaljive sadržaje

Temperature range:
-40°C to 70°C

Characteristics:
- Weight: approx. 2,5 kg
- For motor vehicles transporting explosion-, hazardous or inflammable goods, an emergency isolating switch between the battery and the vehicle electrical system is prescribed according to the german GGVS and the European Regulation ADR. The emergency switch can be operated from the drivers cab.

Technical data:
Nominal voltage: 24 V
max. permanent current: 240 A
Control circuit: (Ex)i 4-6 mA

Connections:
- Main terminals: screwing connection M10 for ring cable lugs
- Control cables: flat plug 6,3 x 0,8 mm insulated

Accessories (see chapter 5.5):
- Control switch

Applications:
- heavy trucks transporting explosion-, hazardous or inflammable goods

opis	Description	broj artikla Art. no.	JP kom. PU pcs.
1-polni prekidač za uzemljenje 24 V za upravljačku jedinicu broj artikla 9501207	1-pole negative switch-off 24 V suitable control unit, Art. no. 9501207	9500588	1
1-polni prekidač za uzemljenje 24 V/BUND za upravljačku jedinicu broj artikla 9501209	1-pole negative switch-off 24 V/BUND suitable control unit, Art. no. 9501209	9500586	1

Dijagram spajanja za sigurnosne prekidače akumulatora

1-polni prekidač za uzemljenje 24 V

Connection Diagram for Battery Emergency Switches

1-pole negative switch-off 24 V

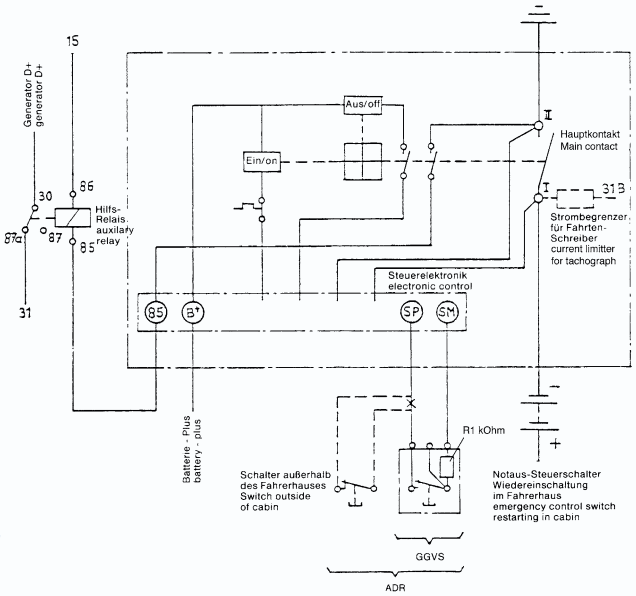

Spojevi SP i SM su smješteni ispod plavog poklopca i mogu se mijenjati.
Unutarnje ožičenje se ne smije mijenjati.

Connections SP and SM are located below the blue cover and can be changed.
The internal wiring must not be changed.

Glavni prekidač akumulatora za hitne slučajeve

Battery Main Emergency Switches

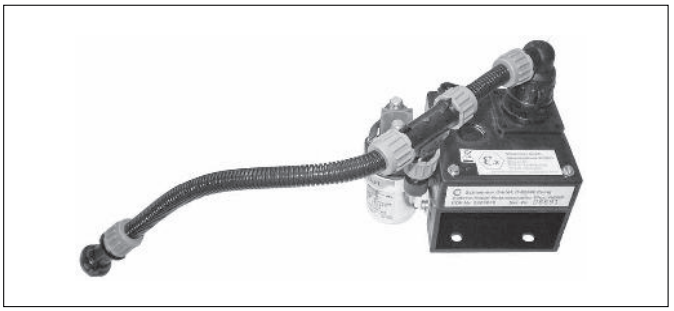

IP 67
IP 00 za Relais-Anschlüsse/ for relay terminals

Radna temperatura:
-40°C do 70°C

Svojstva:
- težina cca. 1,5 kg
- Za motorna vozila koja prevoze eksplozivne, opasne i zapaljive sadržaje. Sigurnosni izolirani prekidač, koji se nalazi između akumulatora i električnog sustava vozila, propisan je prema njemačkom GGVS i europskoj normi ADR. Sigurnosnim prekidačem upravlja se iz vozačke kabine.
- može se koristiti i kao glavni prekidač akumulatora

Svojstva:
Tehnički podaci:
Nominalni napon: 24 V
Max. stalna struja napajanja: 200 A
Kontrola strujnog kruga: (Ex)i 4-6 mA
Spajanje:
- Glavni priključak: navojni spoj M10 za prstenaste kabelske stopice
- Upravljački kablovi (Ex): bajonet 10 SL

Pribor (vidi poglavlje 5.5):
- Kontrolni prekidač

Upotreba:
- gospodarska vozila koja prevoze eksplozivne, opasne i zapaljive sadržaje

Temperature range:
-40°C to 70°C

Characteristics:
- Weight: approx. 1,5 kg
- For motor vehicles transporting explosion-, hazardous or inflammable goods, an emergency isolating switch between the battery and the vehicle electrical system is prescribed according to the german GGVS and the European Regulations ADR. The emergency switch can be operated from the drivers cab.
- Application also as battery main switch

Characteristics:
Technical data:
Nominal voltage: 24 V
max. permanent current: 200 A
Control circuit: (Ex)i 4-6 mA
Connections:
- Main terminals: screwing connection M10 for ring cable lugs
- Control cables (Ex): bayonet 10 SL

Accessories (see chapter 5.5):
- Control switch

Applications:
- heavy trucks transporting explosion-, hazardous or inflammable goods

opis	Description	broj artikla Art. no.	JP kom. PU pcs.
1-polni prekidač za napajanje 24 V za upravljačku jedinicu broj artikla 9533655	1-pole positive switch-off 24 V suitable control unit, Art. no. 9533655	9505045	1
1-polni prekidač za napajanje 24 V/NEMP za upravljačku jedinicu broj artikla 9533651	1-pole positive switch-off 24 V/NEMP suitable control unit, Art. no. 9533651	9505049	1

Prekidač za napajanje 24 V

broj artikla 9505045

Positive Switch-Off 24 V

Art. no. 9505045

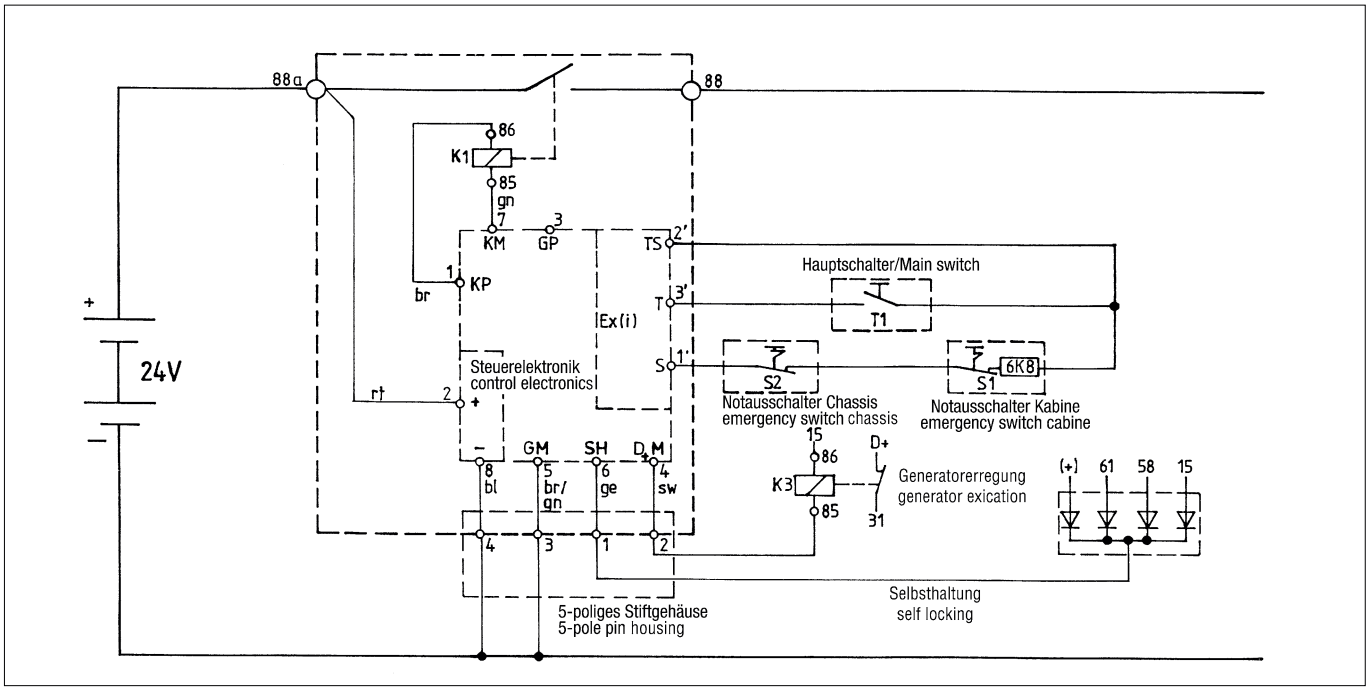

5.5

Elektronička upravljačka jedinica glavnog prekidača akumulatora

Electronic Control Unit for Battery Main Switch

IP 67/ 69K

Radna temperatura:
-40°C do 80°C

Svojstva:
- za upravljanje bistabilnim relejima 9533657/9533701

Pribor (vidi poglavlje 5.5):
- kontrolni prekidač

Upotreba:
- 24 V gospodarska vozila
- za ADR/GGVS vozila
- PTB certificirano za Ex upotrebu (broj artikla 9533667, 9533675)

Temperature range:
-40°C to 80°C

Characteristics:
- to drive bistable relays 9533657/9533701

Accessories (see chapter 5.5):
- Control switch

Applications:
- 24 V Heavy trucks
- for ADR/GGVS vehicles
- PTB-Certification for Ex-use (Art. no. 9533667, 9533675)

Dijagram spajanja za broj artikla 9533667

Connection diagram for Art. no. 9533667

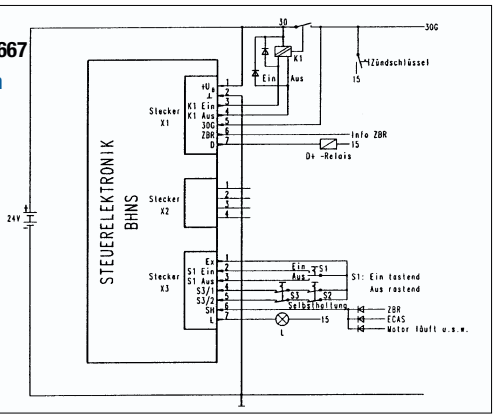

opis Description	broj artikla Art. no.	JP kom. PU pcs.
Upravljačka jedinica za glavni prekidač akumulatora za hitne slučajeve **Control unit for battery main-emergency-switch**		
sa zadrškom cca. 10-20 sec., 1-polini "+" Deceleration app. 10-20 sec., 1-pole "+"	9533667	1
sa zadrškom cca. 10-20 sec., 2-polni Deceleration app. 10-20 sec., 2-pole	9533675	1
Upravljačka jedinica za glavni prekidač akumulatora: bez PTB certifikata (samo za standardna vozila) **Control unit for battery main switch:** no PTB-Certification (for standard vehicles only)	9533649	1

Bistabilni releji 24 V

Bistable Relays 24 V

IP 67/69K
IP 00 za Anschlüsse/ for terminals

5.5

Radna temperatura:
-40°C do 74°C

Svojstva:
- za prekidanje veze između električne instalacije i akumulatora
- potrošnja energije samo pri promjeni statusa

Upotreba:
- 24 V gospodarska vozila

Temperature range:
-40°C to 74°C

Characteristics:
- to disconnect the electric wiring from the battery
- Power consumption only for change of status

Applications:
- 24 V Heavy trucks

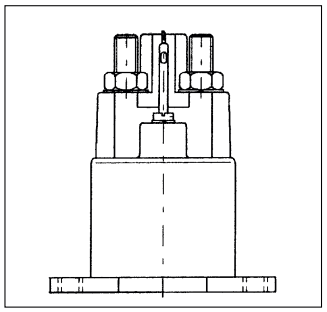

opis Description	broj artikla Art. no.	JP kom. PU pcs.
200 A	9533657	1
300 A	9533701	1

Glavni prekidač akumulatora

Battery Main Switch

IP 68
IP 00 za priključke napajanja/ for power terminals

Radna temperatura:
-40°C do 85°C

Izvedba:
- Bistabilni releji
- integrirana odgovarajuća elektronika
- modularana konstrukcija
- kompaktna izvedba
- nominalna struja napajanja 300 A
- Priključci napajanja: vijak s navojem M10

Pribor (vidi poglavlje 5.5):
- kontrolni prekidač

Upotreba:
- gospodarska vozila
- poljoprivredni strojevi
- građevinski strojevi
- specijalna vozila

Temperature range:
-40°C to 85°C

Characteristics:
- Bistabile relays
- Integrated customized electronics
- Modular assembly
- Compact design
- Nominal-continuous current 300 A
- Power terminals: thread bolt M10

Accessories (see chapter 5.5):
- Control switch

Applications:
- Heavy trucks
- Agricultural machines
- Construction machines
- Special vehicle

napon u vozilu On-board system voltage	zadrška kod pada napona Off-delay	samostalan Self-holding	isključivanje u hitnim slučajevima Emergency off	dodatne informacije Additional information	broj artikla Art. no.	JP kom PU pcs.
12 V	120 s	da/yes	ne/no		9505200	1
24 V	60 s	da/yes	da/yes		9505400	1
24 V	nema/none	ne/no	ne/no	kontrola preko "+" pola baterije Control over Battery "+"	9505410	1
24 V	nema/none	ne/no	ne/no	kontrola preko mase Control over mass	9505420	1

Moguć je razvoj prilagođenih izvedbi:

Integrirana odgovarajuća elektronika za:
12 V primjene npr. za poljoprivredne strojeve
24 V primjene npr. za gospodarska vozila
- prilagođeni spojni krugovi
- prilagođena vremena zadrške
- prilagođeni modovi prekidača

Customized developments possible:

Integrated, customized electronics for:
12 V applications e.g. for agricultural machines
24 V applications e.g. for heavy trucks
- Customized connection circuits
- Customized delay times
- Customized switching modes

Kontrolni prekidač

pribor za prekidač akumulatora

Control Switch

Accessories for Battery Switch

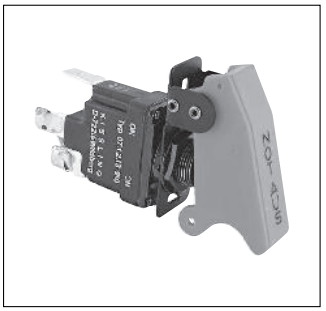

Radna temperatura:
-40°C do 70°C

Svojstva:
- crveni zaštitni poklopac
- 12/24 V

Boje/izvedbe:
- ostale izvedbe na upit

Temperature range:
-40°C to 70°C

Characteristics:
- red protection lid
- 12/24 V

Colour(s)/Designs:
- other types on request

opis	Description	broj artikla Art. no.	JP kom. PU pcs.
12/24 V za vanjsku upotrebu bez kodiranog otpornika	12/24 V for outside operation without coding resistor	9805850	1
24 V sa kodiranim otpornikom 1 KΩ	24 V with coding resistor 1 KΩ	9805869	1
24 V sa kodiranim otpornikom 6,8 KΩ	24 V with coding resistor 6,8 KΩ	9805888	1

Elektronička kontrola temperature

Electronic Temperature Control

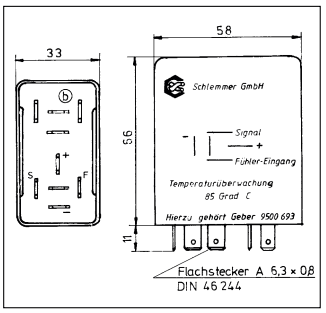

Radna temperatura:
-30°C do 65°C

Svojstva:
- Senzor za temperaturu nadzire ekstremno visoke i brzorastuće temperature

Pribor:
- neophodan je senzor temperature 9500693

Upotreba:
- gospodarska vozila
- građevinski strojevi
- poljoprivredni strojevi

Temperature range:
-30°C to 65°C

Characteristics:
- Temperature sensor follows extreme high and fast rising temperatures

Accessories:
- necessary temperature transmitter 9500693

Applications:
- Heavy trucks
- Construction machines
- Agricultural machines

5.5

opis	Description	broj artikla Art. no.	JP kom. PU pcs.
kontrola temperature	**Temperature control**		
za 85°C	for 85°C	9510001	1
za 120°C	for 120°C	na upit / on request	1
za 130°C	for 130°C	9501436	1

Tehnički podaci:		**Technical Data:**	
Radni napon:	19-30 V	Operating voltage:	19-30 V
Radni napon:	26-30 V	Working voltage:	26-30 V
Točka prekidanja:	120°C ±4°C	Switch point e.g.	120°C ±4°C
Histereza ponovnog uključivanja:	5°C	Reverse hysterisis approx.	5°C
Temperatura okoline:	-30 do 65°C	Ambient temperature:	-30 to 65°C
Zaštita od promjene polariteta:	+/- raspoloživo	Inverse polarity protection:	+/- available
Izlazna struja:	max.2 W / zaštita od preopterećenja (otpornik 20 ohma ugrađen)	Output current:	max. 2 Watt/resistive or inductive load (Protective resistor of 20 inside)
Izlazni signal u uključenom statusu ima negativni potencijal		The output signal in switched-on status has negative potential	

Senzor temperature

Temperature Transmitter

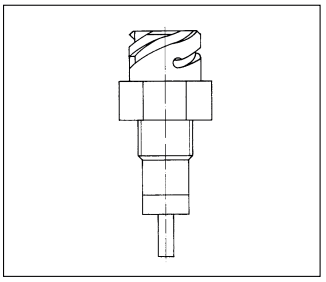

Radna temperatura:
-40°C do 130°C

Svojstva:
- Mjerni element je termalno odvojen od tijela senzora
- vodič između senzora i kontakta je slobodan
- Zakretni moment max. 15 Nm

Upotreba:
- gospodarska vozila
- građevinski strojevi
- poljoprivredni strojevi

Temperature range:
-40°C to 130°C

Characteristics:
- Measuring element is thermally uncoupled from the screw-in thread.
- The wiring of the sensor to the contact pins is potential free.
- Tightening torque max. 15 Nm.

Applications:
- Heavy trucks
- Construction machines
- Agricultural machines

opis	Description	broj artikla Art. no.	JP kom. PU pcs.
Temperaturni senzor	**Temperature transmitter**	9500693	1

Tehnički podaci:	Technical Data:	°C	Ω	±Ω
kontrolne vrijednosti na:	check values at:	20°C	980	11
		85°C	1573	24
		120°C	1963	35
		130°C	2084	40

Senzor temperature

Temperature Transmitters

Radna temperatura:
-40°C do 120°C

Upotreba:
- mjerenje temperature u gospodarskim vozilima

Temperature range:
-40°C to 120°C

Applications:
- Temperature measurements in commercial vehicles

	opis Description	broj artikla Art. no.	JP kom. PU pcs.
	Senzor temperature s kontaktom za signalizaciju **Temperature transmitter with warning contact** Točka prekidanja / switching point: 100°C ± 3°C kontrolne vrijednosti na / check values at: 20°C 698 Ω ± 74 Ω 60°C 144 Ω ± 12 Ω 100°C 39,6 Ω ± 3 Ω način spajanja / electrical connection glava s bajonetom 10 SL / bayonet head 10 SL	9502574	1
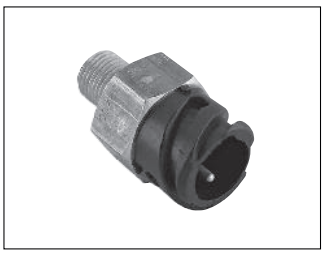	**Senzor temperature jedinice za predgrijanje motora** **Temperature transmitter for flame-starter unit** kontrolne vrijednosti na / check values at: 10°C 1550 Ω ± 175 Ω 20°C 1030 Ω ± 110 Ω 30°C 670 Ω ± 65 Ω način spajanja / electrical connection glava s bajonetom 10 SL / bayonet head 10 SL	9502564	1
	Senzor temperature **Temperature transmitter** kontrolne vrijednosti na / check values at: 0°C 5733 Ω ± 162 Ω 5°C 4581 Ω ± 141 Ω 20°C 2431 Ω ± 86 Ω način spajanja / electrical connection glava s bajonetom DIN 72585 / bayonet head DIN 72585	9502590	1

5.5

Senzorske sonde razine tekućina

Fluid Level Probes

Senzorska sonda razine ulja
Oil level probe

Senzorska sonda razine rashladne tekućine, kompaktna
Cooling water level probe, compact

Radna temperatura:
vidi tabelu

Boje/izvedbe:
- ostali tipovi na upit (npr. tijelo senzora, električni spoj, vrijeme zadrške)

Pribor (vidi poglavlje 5.5):
- adapter dodatno

Upotreba:
- praćenje nivoa rashladne tekućine i ulja u gospodarskim vozilima

Temperature range:
s. table

Colour(s)/Designs:
- other types on request (e. g. screw-in-thread, electrical connection, delay time)

Accessories (see chapter 5.5):
- screw in adaptor optional

Applications:
- Fluid level monitoring of water and oil in heavy trucks

opis	Description	broj artikla Art. no.	JP kom PU pcs.
Senzorska sonda razine ulja	**Oil level probe**	9504667	1
Senzorska sonda razine ulja, kompaktna	**Oil level probe compact**	9509010	1
Senzorska sonda razine rashladne tekućine	**Cooling water level probe**	9503669	1
Senzorska sonda razine rashladne tekućine, kompaktna	**Cooling water level probe compact**	9508010	1

tehnički podaci / Technical Data

	Broj artikla / Art. no.			
	9503669	9504667	9508010	9509010
radni napon: / Operating voltage:	16 ÷ 32 V		9 ÷ 32 V	
izlazno opterećenje na kontaktu "S": Output power at pin "S":	2 W vršna snaga / Resistive load		1 A vršna i inicijalna snaga (zaštita od preopterećenja) Resistive and inductive load (overload protected)	
strujno opterećenje: / Current rating:	10 ÷ 15 mA		5 ÷ 10 mA	
temperatura skladištenja: / Storage temperature:	-40 ÷ 105°C			
radna temperatura / Operating temperature				
- na pipalu: / at feeler:	-30 ÷ 110°C	-30 ÷ 125°C	-40 ÷ 105°C	-40 ÷ 125°C
- na kućištu: / at housing:	-30 ÷ 100°C	-30 ÷ 100°C	-40 ÷ 105°C	-40 ÷ 105°C
vrijeme zadrške na kontaktu "S": / Signal delay on pin "S":	ca. 7 s (standard), ostala vremena zadrške na upit / Further delay times on request.			
položaj za montažu: / Mounting position:	u bilo kom položaju (preporučljivo horizontalno) / From top vertical to horizontal (preferably)			
dimenzija ključa: / Wrench size:	30 mm			
navoj: / Thread:	M14 x 1,5 (standard); ostale vrste navoja na upit / Further threads on request			
konektor: / Connector:	bajonet 16 S / bajonet 16 S; ostali tipovi na upit / Further types on request			

Adapter

za senzorske sonde razine tekućine

Screw-in-Adaptor

for Fluid Level Probe

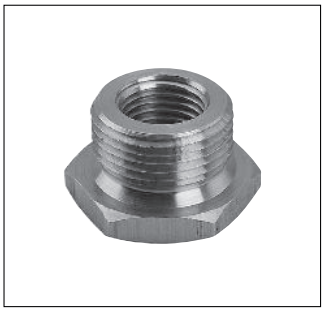

Materijal:
mesing

Radna temperatura:
-40°C do 125°C

Material:
brass uncoated

Temperature range:
-40°C to 125°C

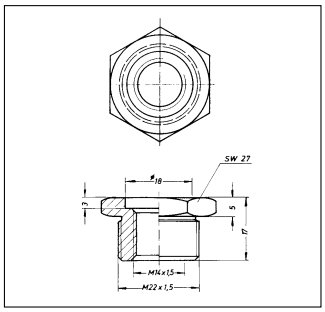

opis Description	broj artikla Art. no.	JP kom. PU pcs.
Adapter za senzorske sonde razine tekućine **M 22 x 1,5 / M 14 x 1,5** **Screw-in-Adaptor for fluid level probes** **M 22 x 1.5 / M 14 x 1.5**	9500596	1

5.5

Kontrolna jedinica

sustava za nadzor kočionih obloga

Control device

for Brake Lining Monitoring System

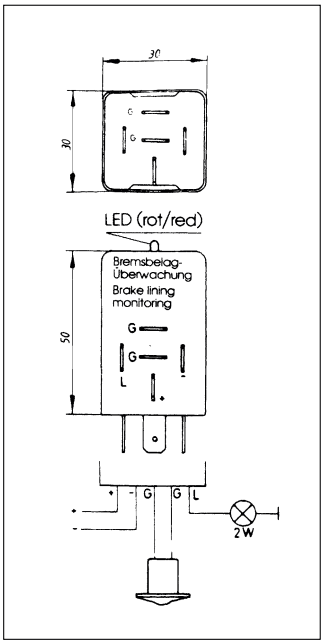

Radna temperatura:
-20°C do 60°C

Upotreba:
- gospodarska vozila
- građevinski strojevi
- poljoprivredni strojevi
- za spajanje senzora kočionih obloga
- Za kontrolu istrošenosti kočionih obloga

Temperature range:
-20°C to 60°C

Applications:
- Heavy trucks
- Construction machines
- Agricultural machines
- For connection of brake lining sensors
- For indication of the wear of break lining

opis	Description	broj artikla Art. no.	JP kom. PU pcs.
Kontrolna jedinica za senzore struje do ca. ≧ 5 mA	**Control device for sensor current**	9500197	1
Kontrolna jedinica za senzore struje do ca. 10 mA	**Control device for high sensor current**	9500198	1

Tehnički podaci:		**Technical data:**	
Napon:	18-30 V	Voltage:	18-30 V
Radna temperatura:	-20°C do 60°C	Temperature range:	-20°C to 60°C
Izlaz na L:	2 W / prekostrujna zaštita	Output at L:	2 W/resistive load
Zaštita od promjene polariteta:	moguće između + i -	Reverse battery protection:	between + and - available
Struja praznog hoda:	≦ 20 mA	Standby circuit:	≦ 20 mA
U slučaju pojave negativnog potencijala na G zasvjetli LED indikator i žarulja.		If the event of negative potential on G, the LED and lamp light up.	
Ukoliko se prekine spoj između G_1 i G_2, LED indikator i žarulja neprestano svjetli.		If the connection between G_1 and G_2 is broken, the LED and lamp are shining lit continuously.	
Sustav funkcionira neovisno o broju serijski spojenih senzora i paralelno spojenih kontrolnih uređaja		Any number of sensors in line, and control devices in parallel, can be operated.	
L = kontrolna žarulja		L = Control lamp	
G = senzor		G = Sensor	

5.5

Nožni prekidač

Foot Switches

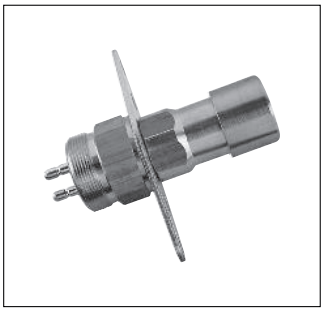

Radna temperatura:
-40°C do 60°C

Svojstva:
- Napon: 24 V/12 V
- prekidač za primjenu u teškim uvjetima rada

Upotreba:
- gospodarska vozila
- građevinski strojevi
- za motornu kočnicu ili retarder

Temperature range:
-40°C to 60°C

Characteristics:
- Voltage 24 V/12 V
- Switch-on function for heavy applications

Applications:
- Heavy trucks
- Construction machines
- For exhaust brake or retarder

opis Description	broj artikla Art. no.	JP kom. PU pcs.
Nožni prekidač sa montažnom prirubnicom sa 2 otvora **Foot switch with 2-hole mounting flange**	9500642	1
Nožni prekidač sa montažnom prirubnicom sa 2 otvora i bajonet utikačom ISO 15170 (prijašnji DIN 72585) **Foot switch with 2-hole mounting flange and bayonet plug ISO 15170 (former DIN 72585)**	9500646	1
Nožni prekidač sa montažnom prirubnicom sa 4 otvora **Foot switch with 4-hole mounting flange**	9502106	1
Nožni prekidač sa montažnom prirubnicom sa 2 otvora za vozila s upravljačem na desnoj strani **Foot switch with 2-hole mounting flange for right-hand drive vehicles**	9500643	1
Montažna ploča za nožni prekidač **Mounting plate for foot switch**	9532927	1

Podnaponski prekidač 24 V/ VZ 800

Undervoltage Control 24 V/ VZ 800

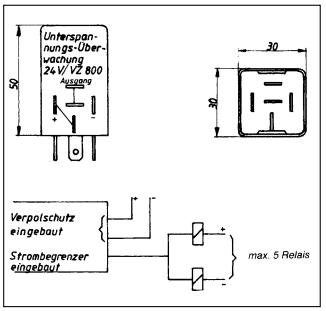

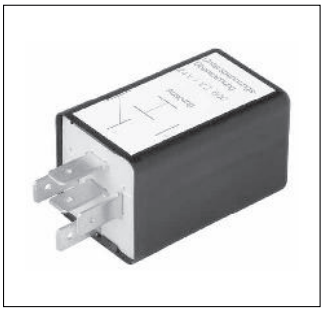

IP 20

Radna temperatura:
-20°C do 60°C

Svojstva:
- zadrška prilikom pada napona: 0,5-1 sek.

Upotreba:
- praćenje napona u vozilu

Temperature range:
-20°C to 60°C

Characteristics:
- Switch delay to voltage drop: 0,5-1 sec.

Applications:
- Monitoring of on-board voltage supply

opis	Description	broj artikla Art. no.	JP kom. PU pcs.
Podnaponski prekidač 24 V / VZ 800	**Undervoltage control 24 V / VZ 800**	9500627	1

Tehnički podaci:		Technical Data:	
Radni napon:	18-32 V	Operating voltage:	18-32 V
Izlazna snaga:	max. 0,5 A na 20°C zaštićeno od kratkog spoja	Output capacitance:	max. 0,5 V at 20°C Protected against short circuits
Isključivanje pri naponu od:	22-22,5 V	Switch-off voltage:	22-22,5 V
Ponovno uključivanje pri naponu od:	24-24,5 V	Reverse voltage:	24-24,5 V
Radna tepmeratura:	-20 do 60°C	Operating temperature:	-20 to 60°C
Temperatura skladištenja:	-40 do 90°C	Storage temperature:	-40 to 90°C
Zaštita od promjene polariteta		Inverse-polarity proof	
Ukoliko izlazni napon ima negativni potencijal > isključivanje napona		Output has negative potential at operating voltage > switch-off voltage	

Naponski transformator 24/12 V 3 A

Voltage Transformers 24/12 V 3 A

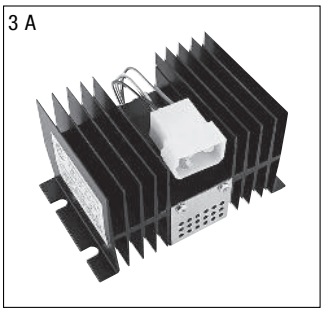

IP 40
za/for 3A

Radna temperatura:
-30°C do 65°C

Upotreba:
- gospodarska vozila
- građevinski strojevi
- za 12 V uređaje, npr. radio prijemnik, mobilni telefon

Temperature range:
-30°C to 65°C

Applications:
- Heavy trucks
- Construction machines
- For 12 V devices, e. g. radio, mobile phone

5.5

opis	Description	broj artikla Art. no.	JP kom. PU pcs.
Naponski transformator 24/12 V 3 A	**Voltage transformer 24/12 V 3 A**	9501189	1

Tehnički podaci:		Technical data	
Ulazni napon:	17-32 V	Input voltage:	17-32 V
Izlazni napon:	12-14,5 V	Output voltage:	12-14,5 V
Temperatura skadištenja:	-30°C – 65°C	Storage temperature:	-30°C – 65°C
Radna temperatura:	-30°C – 65°C	Operating temperature:	-30°C – 65°C
Kontinuirano opterećenje:	3 A - zaštićeno od kratkog spoja	Continuous load:	3 A protected against permanent short-circuit
Pozicija ugradnje:	rebra za hlađenje u vertikalnoj poziciji	Assembly position:	Cooling ribs in vertical position
Ograničeno do:	max. 3,3 A	Current limitation:	on max. 3,3 A
Kod preopterećenja smanjuje se izlazni napon		At overload the output voltage will be reduced	
Prilikom montaže osigurati dobro odvođenje topline		Ascertain a good heat absorbing assembly	

Naponski transformator 24/12 V 10 A

Voltage Transformers 24/12 V 10 A

10 A

IP 20
za/for 10A

Radna temperatura:
-25°C do 65°C

Boje/izvedbe:
- ostale izvedbe na upit

Svojstva:
- DC/DC-transformator

Upotreba:
- gospodarska vozila
- građevinski strojevi
- za rad 12 V uređaja koji troše jaku struju kao npr. hladnjak, TV

Temperature range:
-25°C to 65°C

Colour(s)/Designs:
- Others on request

Characteristics:
- DC/DC-transformer

Applications:
- Heavy trucks
- Construction machines
- Operation of 12 V devices with high current consumption, e. g. fridge, TV

opis	Description	broj artikla Art. no.	JP kom. PU pcs.
Naponski transformator 24/12 V 10 A	**Voltage transformer 24/12 V 10 A**	9500955	1

Tehnički podaci:		**Technical data**	
Ulazni napon:	18-32 V	Input voltage:	18-32 V
Izlazni napon:	12-13 V u temeraturnom rasponu 0-60°C	Output voltage:	12-13 V within temperature range 0-60°C
Temperatura skladištenja:	-25°C – 65°C	Storage temperature:	-25°C – 65°C
Radna temperatura:	-25°C – 65°C	Operating temperature:	-25°C – 65°C
Kontinuirano opterećenje:	10 A U slučaju kratkog spoja na izlazu napon se smanjuje	Continuous load:	10 A In the case of short circuit at the output the voltage is regulated downwards
Prilikom montaže osigurati dobro odvođenje topline		Ascertain a good heat absorbing assembly	

5.5

Stezaljka za vodiče

Cable Clamps

Materijal:
mesing
Poliamid 6

Radna temperatura:
-40°C do 85°C

Upotreba:
- gospodarska vozila
- građevinski strojevi
- poljoprivredni strojevi
- služi za uzemljenje

Material:
Brass uncoated
Polyamide 6

Temperature range:
-40°C to 85°C

Applications:
- Heavy trucks
- Construction machines
- Agricultural machines
- Providing of ground points

priključni vijak Thread bolts	broj artikla Art. no.	JP kom. PU pcs.
6x1/14	9500316	1000
8x1,25/14	9500324	1000
8x1,25/19	9500332	1000
10x1,5/14	9500340	1000
6x1/19	9501614	1000

Stezaljka za vodiče

Cable Clamps

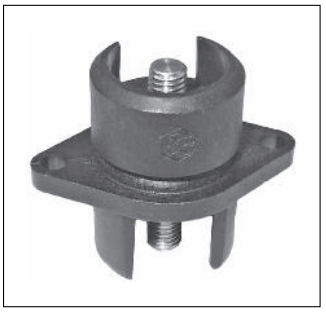

5.5

Materijal:
mesing
Poliamid 6
30 % ojačan staklenim vlaknima

Radna temperatura:
-40°C do 85°C

Upotreba:
- gospodarska vozila
- građevinski strojevi
- poljoprivredni strojevi
- služi za uzemljenje

Material:
Brass uncoated
Polyamide 6
30 % glassfibre reinforced

Temperature range:
-40°C to 85°C

Applications:
- Heavy trucks
- Construction machines
- Agricultural machines
- Providing of ground points

priključni vijak Thread bolts	broj artikla Art. no.	JP kom. PU pcs.
2 x M 6	4834217	1000
2 x M 8	7895017	1000

Pomoćni kabel za pokretanje motora

Auxillary Starter Cable

Radna temperatura:
-25°C do 80°C

Svojstva:
- 2-polni kabel: 2 x 35 mm²
- VG-utikač prema 72593

Upotreba:
- gospodarska vozila
- specijalna vozila
- spojni kabel za pomoćne uređaje za pokretanje motora sa VG-utikačem

Temperature range:
-25°C to 80°C

Characteristics:
- 2-pole cable: 2 x 35 mm²
- VG-plug acc. to 72593

Applications:
- Heavy trucks
- Special vehicle
- Connection cable for auxillary devices with VG-plug

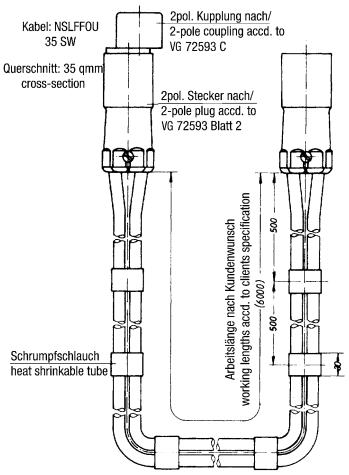

duljina kabela length of cable	broj artikla Art. no.	JP kom. PU pcs.
5000 mm	9500073	1
6000 mm	9500057	1
8000 mm	9500065	1

5.5

5.5

Tokareni dijelovi / Turning Parts

	Stranica		Seite
Tokareni dijelovi	**1-4**	**Turning Parts**	**1-4**
Uvod	**2-3**	**Introduction**	**2-3**
Mogućnosti proizvodnje	**4**	**Manufacturing possibilities**	**4**

Tokareni dijelovi

Precizno tokareni dijelovi prema specifikacijama klijenata

Mogućnosti proizvodnje

Rotaciono simetrični precizni dijelovi
Rotaciono nesimetrični precizni dijelovi
- izrada složenih dijelova u jednom koraku
- na višeosnim tokarilicama

Precizno tokareni dijelovi za:
- autoindustriju
- elektroindustriju
- strojogradnju

Obrada materijala prema
- specifikacijama klijenata
- razvoj dijelova u suradnji s klijentima

Nehrđajući čelik
Stainless Steel

Materijali
- nehrđajući čelik
- rezani čelik
- kaljeni čelik
- mesing
- aluminij

Kapacitet
- približno 25.000.000 komada godišnje
- približno 60 strojeva za tokarenje visokih performansi

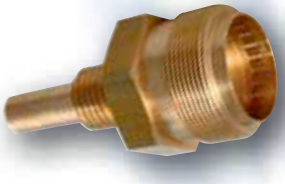

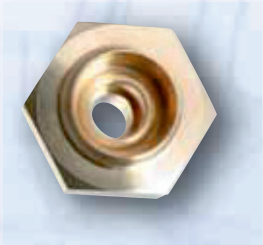

Mesing
Brass

Turning Parts

Precision turning parts according to clients specifications

Manufacturing possibilities

Rotationally symmetrical precision parts

Not rotationally symmetrical precision parts

- Processing of complicated parts in a one work-step on flexible turning centres

Precision turning parts for:

- Automotive industry
- Electrical industry
- General engineering

Material processing according to

- clients specifications
- development in cooperation with clients

Materials

- Stainless steel
- Free-cutting steel
- C-Steel
- Brass
- Aluminum

Capacities

- approx. 25.000.000 parts per year
- approx. 60 high performance lathes

Kaljeni čelik
Case-Hardened Steel

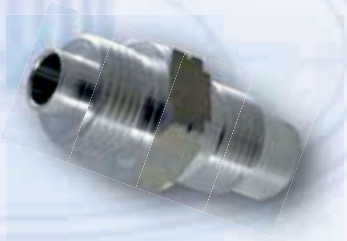

Aluminij
Aluminum

Rezani čelik
Free-Cutting Steel

Tokareni dijelovi
Mogućnosti proizvodnje

Turning Parts
Manufacturing possibilities

Mogućnosti proizvodnje Manufacturing possibilities	Strojevi za obradu materijala Maachines for the processing of materials	Tolerancija proizvodnje prema IT Manufacturing tolerance acc. IT	Broj komada Number of pieces
Promjer: 8 do 48 mm Duljina: do 80 mm Diameter: 8 to 48 mm Length: up to 80 mm	Strojevi s višestrukim vratilima 15 strojeva Proizvođač: Gildemeister, Index, Schütte Multiple spindle machines 15 machines Machine types: Gildemeister, Index, Schütte	IT6 do IT9 IT6 to IT9	**Za zahtjevne geometrijske oblike i zahtjevne materijale:** od 5.000 kom. Po dimenziji: 1.000 kom **Za jednostavne geometrijske oblike i materijale jednostavne za obradu:** od cca. 50.000 kom. Po dimenziji: 5.000 kom **For demanding geometries and high-grade materials:** as of 5.000 pcs. Lot size: 1.000 pcs. p.a. **For simple geometries and easy to handle materials:** as of approx. 50.000 pcs. Lot size approx. 5.000 pcs. p. a.
Promjer: 8 do 60 mm Duljina: do 100 mm Diameter: 8 to 60 mm Length: up to 100 mm	CNC tokarilice s jednostrukim vratilom 40 strojeva, Proizvođač: Index Single spindle CNC-turning machines 40 machines, machine type: Index		
Promjer: 8 do 60 mm Duljina: do 80 mm Diameter: 8 to 60 mm Length: up to 80 mm	strojevi s jednostrukim vratilom 40 strojeva, Proizvođač: Index Single spindle machines 40 machines, machine type: Index		
Promjer: 5 do 20 mm Duljina: do 200 mm Diameter: 5 up to 20 mm Length: up to 200 mm	CNC tokarilice s jednostrukim vratilom, za tokarenje dugih komada 4 stroja Proizvođač: Gildemeister, Tornos Single spindle CNC long turning machines 4 machines Machine types: Gildemeister, Tornos		

Materijali
Materials

Čelik za automate, tvrdi čelik, nehrđajući čelik i čelik otporan na kiseline, mesing, aluminij
Free-cutting steel, case-hardened steel, tempered steel, corrosion-resistant and acid-resistant steel, brass, aluminum

Strojevi za daljnju obradu
Machines for further processing

CNC - strojevi za poliranje / CNC – Polishing machine
Strojevi za glodanje, bušenje i narezivanje / Milling, drilling and thread rolling machines

Termalna obrada
Thermal treatment

Kaljenje, plinsko i indukciono otvrdnjavanje, oplemenjavanje, nitrokarbonizacija i nitratizacija
Case-hardening, protective gas and induction hardening, heat treatment, nitro carburizing and nitrating

Obrada površine
Surface finishing

Cinčanje (vruće i elektro), niklanje, kromiranje, posrebriranje, bruniranje, eloksiranje...
Galvanizing, nickel-plating, chrome-plating, silvering, phosphating, burnishing, chemically nickel-plating, anodizing, hard-coating

Informacije / Informations

	Stranica
Oznake	3
Opaske, modifikacije i jamstva	3
Upute za skladištenje proizvoda od brizganog poliamida	3
Zaštitni znakovi	4
RoHS/ElektroG/WEEE	5
REACH - novo europsko zakonodavstvo za kemikalije	6
Sustavi zaštite (IP) prema EN 60529	7
Kemijska otpornost plastičnih materijala	8 - 11
Tablice za pretvorbu	
Mjere	12
Rebraste cijevi (inči/coli - milimetri - NW)	12
milimetri u inče/cole	12
Normalni profil - AHW	12
Inči/coli u milimetre	13
Tablica navoja	14

	page
Legend	3
Remarks, modifications and warranty	3
Storing Instructions for Polyamide Injection molding parts	3
Trademarks	4
RoHS/ElektroG/WEEE	5
REACH – The new European chemical legislation	6
Modes of Protection (IP) according to EN 60529	7
Chemical resistance of plastic materials	8 - 11
Conversion Charts	
Measures	12
Corrugated tubes (Inches - mm - NW)	12
mm to inches	12
Normal Profile - Automotive High Wave	12
Inches - mm	13
Thread chart	14

Oznake

JP	jedinica pakiranja		razrezano
kom.	komad		nerazrezano
	kontejner		perforirano
	kolut		

Legend

PU	package unit		slit
pcs.	piece		unslit
	Container		perforated
	Coils (Rings)		

Opaske, modifikacije i jamstva

Gore navedene informacije kao i svi pismeni ili usmeni savjeti u vezi primjene tehnologija pružaju se u skladu s našim najboljim saznanjima. Prema tome, svaki takav savjet ili informacija je potpuno neobvezujući, posebno u odnosu na prava industrijskog vlasništva trećih strana.

Naše savjetodavne usluge ne isključuju odgovornost primatelja da samostalno razmotri savjet i njegovu prikladnost u odnosu na namjeravanu primjenu i svrhu.

Svaki zahtjev temeljen na uvjetima rada i različitim uvjetima primjene koji su izvan naše sfere utjecaja je isključen. Ukoliko se naši proizvodi primijenjuju ili obrađuju i naš savjet koristi u proizvodima proizvedenima od strane korisnika, smatrati će se da je takav slučaj izvan naše kontrole i u skladu s tim izvan naše sfere odgovornosti.

Ukoliko bi naša odgovornost bila dovedena u pitanje unatoč navedenoj napomeni, odšteta će biti ograničena na vrijednost robe isporučene od naše strane i korištene od strane korisnika.

Naše jamstvo se oslanja i u skladu je sa standardom kvalitete naših proizvoda, u skladu s našim specifikacijama i našim Općim odredbama i uvjetima prodaje, isporuke i plaćanja.

Bilo koje jamstvo funkcije proizvoda je uvjetovano pravilnim korištenjem i tretmanom proizvoda, a osobito pridržavanjem propisanih steznih raspona, kabelskih promjera, zateznih momenata i nivoa zaštite

Prikladnost proizvoda za namjenu i ugradnju kod korisnika, u skladu s uvjetima primjene, trajanjem korištenja i opterećenja, mora biti provjerena i zajamčena od strane korisnika pod radnim uvjetima o kojima je riječ i mora biti u skladu s postojećom električnom instalacijom i sigurnosnim propisima.

Zadržavamo pravo na pogreške i tehničke promjene.

Registar sa šiframa artikla služi kao brzi orjentacijski vodič. Odstupanja se odnose na tiskarske pogreške. Ukoliko niste sigurni da su podaci točni, molimo vas postavite upit.

Ova dokumentacija može se reproducirati ili umnažati isključivo elektronskim putem te s našim pristankom.

Vjerodostojna je isključivo najnovija revizija kataloga.

Remarks, modifications and warranty

The above information and any written or verbal application engineering-related advice are provided to the best of our knowledge. However any such advice or information is totally non-binding and without commitment, also in respect of any third-party industrial property rights.

Our advisory service does not exonerate the recipient from itself reviewing the advice provided for its suitability in respect of the intended application and purpose.

Any claim based on work conditions and different application conditions outside our sphere of influence is excluded. Should our products be applied or processed and our advice utilized in products manufactured by you, this shall be deemed to take place beyond our control and accordingly outside our sphere of responsibility.
Should our liability be called into question despite this disclaimer, however, any damages shall be limited to the value of goods supplied by us and utilized by you.

Our warranty relates to a consistent standard of quality in our products in accordance with our specifications and our General Terms and Conditions of Sales, Delivery and Payment.
Any warranty of product function is conditional upon correct handling and treatment of the products, in particular upon correct observance of clamping ranges, cable diameters, tightening torques and protection ratings.

The suitability of the product for the purpose and application of the user in respect of application conditions, duration of use and load capacity must be reviewed and guaranteed by the user under the practical conditions in question, and must be in compliance with currently valid electrical installation and safety regulations.

Subject to error and to technical modifications.

The registry with the order numbers is mainly to serve as a quick orientation guide. Deviations are related to printing errors. In any case please inquire for the exact details.

This documentation may only be reproduced or duplicated using any electronic means with our consent.

The latest valid revision of the catalogue only is authoritative.

Upute za skladištenje proizvoda od brizganog poliamida

– tijekom razdoblja skladištenja od jednog do tri mjeseca, moguće je upijanje vode/vlage do 2,5% težine dijelova izrađenih od poliamida
– preporučujemo temeraturu skladištenja od 15° do 25° C uz vlažnost zraka od 55 % do 75 %.
– proizvodi od poliamida moraju biti pohranjeni u zavarenm vrećama
– uskladišteni pojedinačni proizvodi, odnosno jedinice pakiranja ne smiju biti izložene atmosferskim uvjetima.
– djelomično vađenje proizvoda iz vreće mora se izvršiti neposredno prije daljnje upotrebe.
– vreća mora biti ponovno zatvorena odmah nakon što se izvadi proizvod.

Storing Instructions for Polyamide Injection molding parts

– Polyamide conditions during a period of 1 to 3 month, that, means a possible Water-/humidity absorption up to 2,5 % of the part weight.
– We recommend a storing temperature of 15° C to 25° C at an atmospheric humidity of 55 % to 75 %.
– Polyamide articles should be stored in welded bags.
– When stored, parts/packaging units may not be exposed to weather.
– Partial withdrawals from the bag should be carried out just before further processing.
– The bag must be closed straight after the parts withdrawal.

Zaštitni znakovi

Mnogi naši proizvodi su testirani i odobreni od strane slijedećih organizacija za certifikaciju:

Proizvodi sa UL oznakom i certifikatom osiguravaju pristup najvećim svjetskim tržištima. Tako označeni proizvodi garantiraju maksimum kvalitete i samosvojnosti. U Sjevernoj Americi UL znak se prepoznaje kao najvažniji znak kvalitete za sigurnost. Znak je također vrlo proširen i u Južnoj Americi, Europi, na Bliskom istoku, u Africi te u Azijsko-Pacifičkoj regiji i Australiji.

Proizvodi s ovom vrstom oznake ocijenjeni su u skladu sa kanadskim sigurnosnim zahtjevima.

Proizvodi sa "Oznakom Prepoznatljive Komponente" testirani su u skladu sa UL standardom. Ovaj znak koristimo za sastavne dijelove koji su dio složenijeg proizvoda ili sustava. Ova testna oznaka je vjerojatno najšire prihvaćen oblik certificiranja od strane kupaca, regulatornih tijela i osiguravateljskih društava u SAD i Kanadi.

VDE oznaka pokazuje sukladnost s VDE normama ili europskim ili međunarodno usklađenim standardima i potvrđuje usklađenost sa zaštitnim zahtjevima važećih direktiva Europske Komisije.VDE oznaka je simbol koji se odnosi na električne, mehaničke, toplinske, otrovne, radiološke i druge opasnosti.

Proizvodi koji su označeni s oznakom CSA certifikacije, provjereni su i ovjereni da zadovoljavaju postojeće standarde za sigurnost i izvedbu. Ti standardi uključuju standarde propisane od strane UL (Underwriters Laboratories), ANSI (American National Standards Institute) i NSF (National Sanitation Foundation).

GL	**Germanischer Lloyd** pomorska klasifikacija.
	DET NORSKE VERITAS pomorska klasifikacija
	Ex znak je specifična oznaka opreme zaštićene od eksplozije. Koristi se kako bi pokazala da su oprema, zaštitni sustavi ili komponente u skladu sa zahtjevima europskih normi koje su usklađene sa Direktivom 94/9/EZ (ATEX Direktive, nazvana po francuskom „ATmosphere EXplosible“).
	ADR: Europski sporazum koji se odnosi na internacionalni cestovni prijevoz opasnih tereta **GGVS:** Njemački tehnički pravilnik o cestovnom prijevozu opasnih tereta
NF F16-101	NF F16-101 je ispitivanje prema Pravilniku francuskih željeznica o materijalima za izradu željezničkih vozila.
NFR 13-903	Certifikacija prema francuskom standardu NFR 13-903.
DIN 54837	Ispitivanje materijala, malih sastavnih dijelova i dijelova za željeznička vozila - određivanje ponašanja pri gorenju uporabom plinskog plamenika.
	CE oznaka (također poznata kao CE znak) je obvezna na mnogim proizvodima plasiranim na jedinstvenom tržištu u Europskom gospodarskom prostoru (EEA).CE oznaka potvrđuje da je proizvod zadovoljio EU-zahtjeve vezane na sigurnost potrošača, zdravlje ili ekologiju.

Trademarks

Many of our products have been tested and authorized by the following approval organisations:

Products with UL test marks and certifications support access to the world‘s major sales markets. Such marked products guarantees maximum quality and integrity, and throughout North America the UL Mark is recognized as the number one quality mark for safety. As well in South America, Europe, the Middle East, Africa, the Asia-Pacific region and Australia this mark is very widespread.

The products with this type of mark have been evaluated to Canadian safety requirements.

Products with the „Recognized Component Mark“ have been tested by UL. We use this mark for component parts that are part of a larger product or system. This test mark is probably the most widely accepted form of certification amongst consumers, regulatory authorities and insurance companies in the USA and Canada.

The VDE Mark indicates conformity with the VDE standards or European or internationally harmonized standards resp. and confirms compliance with protective requirements of the applicable EC Directive(s). The VDE Mark is a symbol for electrical, mechanical, thermal, toxic, radiological and other hazards.

Products bearing the CSA Certification Mark have been tested and certified to meet applicable standards for safety or performance. These standards include those of UL (Underwriters Laboratories), ANSI (American National Standards Institute) and NSF (National Sanitation Foundation).

The **Germanischer Lloyd AG** is a marine classification society.	
DET NORSKE VERITAS Marine classification	
The Ex mark is a specific marking for explosive protection equipment. It is used to show that equipment, protective systems or components comply with the requirements of the European standards that are harmonised with the 94/9/EC Directive (ATEX Directive, named after the French „ATmosphere EXplosible“).	
ADR: European agreement concerning the international carriage of dangerous goods by road **GGVS:** German technical rules for dangerous goods-regulation road	
The NF F16-101 is a test according to French rule in building materials Railway (SNCF).	
Certification according to French standard NFR 13-903.	
Testing of materials, small components and component sections for rail vehicles - Determination of burning behaviour using a gas burner.	
The CE marking (also known as **CE mark**) is a mandatory on many products placed on the single market in the European Economic Area (EEA). The **CE marking** certifies that a product has met EU consumer safety, health or environmental requirements.	

RoHS/ElektroG/WEEE

RoHS

Proizvodi koji nose ovu oznaku u skladu su sa EU Direktivom 2002/95/EC koja zabranjuje uporabu određenih tvari u proizvodnji ili preradi elektro i elektroničke opreme i komponenti. Cilj Schlemmera je isključiti korištenje posebno problematičnih materijala kod spomenutih proizvoda. Između ostalog, to se odnosi na bezolovno lemljenje elektroničkih komponenti, povlačenje iz upotrebe otrovnih usporivača plamena u proizvodnji kabela i uređaja za zaštitu kabela, te uvođenje odgovarajućih zamjenskih proizvoda.

Slijedeće tvari ne nalaze se u gore navedenoj opremi u skladu s direktivom:

- olovo
- živa
- kadmij
- šestovalentni krom
- polibromirani bifenil (PBB)
- polibromirani difenil eter (PBDE)

Revidirani dodatak direktive određuje maksimalne koncentracije za materijale sadržane u proizvodu. Dopuštene koncentracije su 0,01% po težini za kadmij i 0,1% po težini za ostalih pet tvari. Mesing i bakrene legure ne smiju sadržavati više od 4 posto olova po težini.

RoHS akronim znači "ograničenje upotrebe određenih opasnih tvari u elektro i elektroničkoj opremi". Prijelazno razdoblje za proizvođače i industrije na koje se odnosi ova direktiva bilo je na snazi do 1. srpnja 2006.

Deklaracija o provedbi Direktive 2002/95/EC (RoHS) od 27.01.2003 i Njemačkog zakona o elektro i elektroničkoj opremi (ElektroG) od 16.03.2005, kao i Direktive 2002/96/EC - o otpadu elektro i elektroničke opreme (WEEE)

Schlemmer proizvodi koji su vam isporučeni ne sadrže - prema našem saznanju - tvari u koncentracijama, pripremi ili primjeni čije stavljanje na tržište je zabranjeno u skladu s trenutno važećim zahtjevima Europske direktive 2002/95/EC (RoHS) od 27.01.2003 i njemačkim Zakonom o elektro i elektroničkoj opremi (ElektroG) od 2005/03/16.

Nadalje, Schlemmer proizvodi također ne sadrži bilo kakav kromirani premaz s heksavalentnim kromom na površini.

Schlemmer proizvodi uglavnom su komponente bez samostalne funkcije i stoga ne podliježu RoHS / WEEE / ElektroG.

Te komponente uključuju kabele i žice, prilagođene kabele i žice; uvodnice, cijevne sustave; priključke i dijelove za njihove završetke, instaliranje i obilježavanje kablova i žica kao i mehatroničke komponente.

Isključivo mehanički alati (bez upotrebe struje!) kao što su kliješta, škare, odvijači, alati za skidanje izolacije i sl. ne podliježu RoHS / WEEE / ElektroG.

U pojedinim slučajevima Schlemmer proizvodi ne moraju biti u skladu s RoHS-om kada su instalirani u "velikim nepokretnim industrijskim alatima" (strojogradnja). (Točka 6, Dodatak IA, 2002/96/EC).

Međutim, električni alati za rezanje, skidanje, gnječenje, pritiskanje i stezanje obuhvaćeni su ovim pravilima.

Također su obuhvaćeni električni mjerni alati, pisači, strojevi za utiskivanje. Međutim, ove proizvode Schlemmer ne distribuira.

Iako većina Schlemmer proizvoda nije izravno obuhvaćena RoHS / WEEE / ElektroG direktivama, naša je briga savjetovati naše klijente o korištenju ugradbenih ili dodatnih proizvoda u elektro i elektroničkoj opremi te osigurati pravovremene informacije o usklađenosti sa graničnim vrijednostima navedenim u Odjeljku 5. RoHS / ElektroG.

Što se tiče Schlemmer proizvoda od mesinga, na njih se odnosi izuzetak naveden u točki 6. dodatka RoHS-a prema kojem su bakrene legure s udjelom olova do 4,0 posto težine izuzete. Mi koristimo mesing legure s udjelom olova max. 3,5 posto težine za proizvode o kojima je riječ, pa su zbog toga u skladu s RoHS zahtjevima.

RoHS/ElektroG/WEEE

Products bearing this mark comply with the EU Directive 2002/95/EC banning the use of certain substances in the manufacture or processing of electrical and electronic equipment and components. The objective of Schlemmer is to exclude the use of particularly problematic material components in the products in question. Amongst other things, this entails lead-free soldering of electronic components, withdraw of toxic flame retardants in the manufacture of cables and cable protection devices and the introduction of suitable substitute products.
The following substances are not contained in the abovementioned equipment according to the directive:

- Lead
- Mercury
- Cadmium
- Sexavalent chromium
- Polybrominated biphenyls (PBB)
- Polybrominated diphenyl ethers (PBDE)

The revised Appendix to the Directive specifies maximum concentrations for the materials contained in a product. The permitted concentrations are 0.01% by weight for cadmium and 0.1% by weight for the other five substances. Brass and copper alloys must not contain more than 4% lead by weight.

The acronym RoHS means „Restriction of the use of certain hazardous substances in electrical and electronic equipment“. A transitional period for manufacturers and industries affected by this Directive was effective until July 1, 2006.

Declaration regarding the Implementation of Directive 2002/95/EC (RoHS) of 27 01.2003 and of the German Electrical and Electronic Equipment Act (ElektroG) of 16 03.2005 as well as of the Waste Electrical and Electronic Equipment (WEEE) Directive 2002/96/EC

The Schlemmer products delivered to you do not contain - according to our knowledge – substances in concentrations, preparations or applications whose placing on the market is forbidden in accordance with the current requirements of the European directive 2002/95/EC (RoHS) of 27. 01.2003 and the German Electrical and Electronic Equipment Act (ElektroG) of 16.03.2005.

Furthermore, Schlemmer products also do not contain any chromised coatings with hexavalent chromium in the surface.

Schlemmer products are mostly components without any independent function and therefore not subjected to RoHS/WEEE/ElektroG.

These components include cables and wires; customised cables and wires; glands; protection hose systems; connectors and components for their endings, installing and marking cables and wires as well as mechatronics components.

Purely mechanical tools (no electric current!) such as tongs, scissors, power screwdrivers, stripping tools etc. are not subjected to RoHS/WEEE/ ElektroG.

In particular Schlemmer products need not comply with RoHS when they are installed in „large-scale stationary industrial tools“ (machine construction). (Item 6, Annex IA, 2002/96/EC).

However, electrical tools for cutting, stripping, crimping, pressing and shrinking are concerned.
Also electrical measuring tools, printers, embossing machines are concerned. These products, however, are not distributed by Schlemmer.

Even if the vast majority of Schlemmer products are not directly concerned by RoHS/WEEE/ElektroG, it is our concern to consult our customers using products as built-in or add-on parts in electrical and electronic equipment and provide early information on compliance with the threshold values specified in Section 5 of RoHS/ElektroG.

As far as Schlemmer products made of brass are concerned, the exceptional rule stated under Item 6 of the Annex to RoHS applies according to which copper alloys with a lead portion of up to 4.0 weight per cent are exempted from the requirements. We use brass alloys with a lead portion of max. 3.5 weight per cent for the articles concerned and therefore are consistent with the RoHS requirements.

REACH – novi europski zakonodavni okvir za kemikalije

1. Što je REACH?

REACH je kratica za "registraciju, evaluaciju, autorizaciju i ograničavanje kemikalija"

Svrha ovog pravilnika je osigurati visoku razinu zaštite zdravlja ljudi i okoliša, kao i slobodan protok tvari na unutarnjem tržištu, uz povećanje konkurentnosti i inovacije.

REACH polazi od pretpostavke da proizvođači, uvoznici i daljnji korisnici moraju osigurati da proizvode plasiraju na tržište ili koriste samo tvari koje ne štete ljudskom zdravlju ili okolišu. Sve njegove odredbe se temelje na načelu opreza.

Registracija tvari je obvezna za sve one koji proizvode ili uvoze više od jedne metričke tone tvari godišnje.

Neregistrirane tvari ne smiju se koristiti ili prodavati.

U slučaju da su tvari "vrlo visokog rizika", njihova će upotreba biti odobrena ili ograničena.

2. Da li se REACH odnosi na vas?

REACH se odnosi na proizvođače, uvoznike i korisnike kemikalija

Tvari moraju biti registrirane od strane onoga tko ih stavlja na tržište, tj.proizvođača ili uvoznika.

Tvrtke koje kupuju tvari na europskom tržištu nazivaju se "daljnji korisnici ".

Fazni pristup s različitim rokovima je razvijen kako bi se olakšala registracija. Neke tvari su izuzete od registracije - na primjer kisik, vodik te neopasni prirodni spojevi ili pak druge tvari koje su regulirane drugačije, poput farmaceutskih proizvoda, biocida ili kozmetike.

Proizvođači i uvoznici

Moraju prijaviti sve tvari koje proizvode ili uvoze u količinama većim od jedne metričke tone godišnje.

Neregistrirane tvari ne smiju se koristiti ili stavljati na tržište. Registracija treba biti popraćena tehničkom dokumentacijom (proširena MSDS) i - ovisno o tvari ili iznosu - izvješćem kemijske sigurnosti koje obuhvaća sve identificirane načine korištenja za koje proizvođač zna da postoje.

Daljnji korisnici

Također, ukoliko ih sam sintetizira ili uvozi obvezan je registrirati tvari, podjednako kao kod kupovine.

Osim toga, korisnik mora provjeriti je li njegova pojedinačna uporaba tvari uključena u izvješću proizvođača o kemijskoj sigurnosti.

Ako nije, može zatražiti od proizvođača da ga uključi u izvješće o kemijskoj sigurnosti ili može pripremiti svoje izvješće o kemijskoj sigurnosti.

Za najnovije Schlemmerove informacije o REACH-u molimo posjetite:
www.schlemmer.com / Downloads / Reach

REACH – The new European chemical legislation

1. What is REACH?

REACH is an abbreviation for „Registration, Evaluation, Authorization and Restriction of Chemicals“

The purpose of this regulation is to ensure a high level of protection of human health and the environment as well as the free circulation of substances on the internal market while enhancing competitiveness and innovation.

REACH parts from the premise that manufacturers, importers and downstream users must make sure that they only manufacture, place on the market or use substances that do not harm human health or the environment. All its provisions are based on the precautionary principle.

Substance registration is mandatory for anyone who produces or imports more than one metric ton of a substance per year.

Unregistered substances may not be used or marketed.

Substances only have to be authorized or even restricted, if they are „of very high concern“.

2. Does REACH apply to you?

REACH applies to manufacturers, importers and users of chemicals

Substances must be registered by whoever places them on the market, i.e., the manufacturers or importers.

Companies that buy substances in the European market are called "downstream users".

A phased approach with different deadlines has been developed in order to facilitate registration. Some substances have been exempted from registration for example oxygen, hydrogen and other, as not dangerous known natural substances or other substances, which are regulated other wise like pharmaceuticals, biocides or cosmetics.

Manufacturers and importers

Must register all substances which they manufacture or import in quantities of more than one metric ton per year.

Unregistered substances may not be used or marketed. The registration should be accompanied by a technical dossier (expanded MSDS) and - depending on the substance or the amount - a chemical safety report that includes all the identified uses that the manufacturer is aware of.

Downstream users

May also be required to register substances if they not only purchase but also synthesize or import substances.
In addition, users must check whether their individual use of the substance has been included in the manufacturer's chemical safety report.
If not, they can either ask the manufacturer to include this use in its chemical safety report or prepare their own chemical safety report.

For the latest Schlemmer Information about REACH please visit:
www.schlemmer.com / Downloads / Reach

Sustavi zaštite (IP) za električnu opremu prema EN 60529
Modes of Protection (IP) for electric operating material according to EN 60529

Prvi indeks
1st figure

Stupnjevi zaštite materijala od dodira i stranih tijela
Degree of protection against contact and foreign matters protection

IP specifikacije/Specifications

0		bez zaštite no protection
1	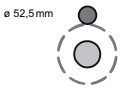	Zaštita od prodora čvrstih stranih tijela većih od 50 mm. (nehotičan dodir rukom) Protection against penetration by solid foreign matters larger than 50 mm (accidental touching by hand)
2		Zaštita od prodora čvrstih stranih tijela većih od 12 mm. (dodir prstima) Protection against penetration by solid foreign matters larger than 12 mm (touching with fingers)
3	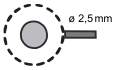	Zaštita od prodora čvrstih stranih tijela većih od 2,5 mm. (dodir alatima, žicama, itd. promjera većeg od 2,5 mm) Protection against penetration by solid foreign matters larger than 2,5 mm (touching with tools, wires etc. larger than 2,5 mm)
4	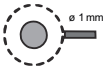	Zaštita od prodora čvrstih stranih tijela većih od 1 mm. (dodir alatima, žicama, itd. promjera većeg od 1 mm) Protection against penetration by solid foreign matters larger than 1 mm (touching with tools, wires etc. larger than 1 mm)
5	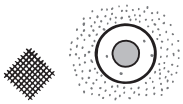	Potpuna zaštita prilikom dodirivanja. Zaštita od naslaga prašine. Prodor prašine nije u potpunosti spriječen. Complete protection from being touched. Protection from harmful dust deposits - dust penetration is not completely prevented.
6	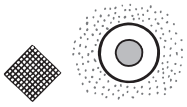	Potpuna zaštita prilikom dodirivanja. Zaštita od prodara prašine. Complete protection from being touched. Protection against penetration by dust.

Drugi indeks
2nd figure

Stupnjevi zaštite materijala od utjecaja vode i tekućina
Degree of protection against fluids (water protection)

IP specifikacije/Specifications

0		bez zaštite no protection
1		Zaštita od okomitog kapanja vode. Protection against vertically dripping water
2		Zaštita od kapljica vode koje padaju pod kutem do maksimalno 15° od okomice. Protection against drip water falling at an angle of up to 15 degrees
3	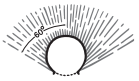	Zaštita od prskanja vode pod kutem do maksimalno 60° od okomice. Protection against spray water falling at an angle of up to 60 degrees
4		Zaštita od prskanja vode iz bilo kojeg smjera. Protection against splash water from all directions
5	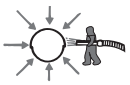	Zaštita od mlaza vode iz bilo kojeg smjera. Protection against water jets from all directions
6	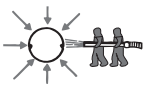	Zaštita od kratkotrajnog prodora vode od, primjerice, velikih valova. Protection against temporary flooding e.g. by rough sea
7		Zaštita od prodora vode u proizvod, ako je uronjen u vodu pod određenim tlakom u neodređenom trajanju. Protection when submersed in water at specified pressure and unspecified duration
8		Zaštita od prodora vode u proizvod uronjen u vodu s povećanim tlakom u neodređenom trajanju. Protection when submersed in water at elevated pressure and unspecified time

Kemijska otpornost plastičnih materijala

+ označava otpornost
o označava uvjetnu otpornost
- označava nepostojanje otpornosti

	Koncen-tracija %	pri temperaturi +°C	Poliamid	Poliamid	Poliamid	Termo-plastični poliuretan	Poli-propilen	Poli-etilen	Poli-etilen	Poli-stiren	Termo-plastični elastomer	Guma od nitrila
Reagens			**PA 6**	**PA 66**	**PA 12**	**PU**	**PP**	**HD-PE**	**LD-PE**	**PS**	**TPE**	**NBR**
Acetaldehid	40	20	o	o	+		+					20°C o
Aceton	100	20	+	+	+	-	+	o	o			-
Akrilna kiselina	100	> 30	-	-	-					-		
Alkohol	96	20	o	o	+		+	+	+	20% +		
Alkohol etilni, hidratizirani	10	20	40 Vol.%+	40 Vol.%+	40 Vol.%+		+				+	+
Alkohol metilni	100	20	+	+	+		40°C +	+	+	+	+	+
Aluminij klorid, hidratizirani	razrijeđen	40					+	+	+	+		20°C +
Aluminij sulfat, hidratizirani	razrijeđen	40					+	+	+	+		20°C +
Aluminij, hidrat	razrijeđen	40					+	+	+	+		20°C +
Amonij klorid, hidratizirani	zasićen	60				3% o	+	+	+			20% +
Amonij nitrat, hidratizirani	razrijeđen	40					+	+	+	+		20% +
Amonij sulfat, hidratizirani	razrijeđen	40					+	+	+			-
Amonijak, otopina	zasićena	20	20% +	20% +	20% +		+	+	+	20% +		
Anilin hidroklorid, hidratizirani	zasićen	20					+	o	o			
Anilin, čisti	100	20	o	o	o		+	+	+	-	+	
Bakar monoklorid, hidratizirani	zasićen	20					+	+	+			+
Bakar sulfat, hidratizirani	zasićen	60					+	+	+			20% +
Benzaldehid, hidratizirani	zasićen	20	čisti o	čisti o	čisti o		+			-		-
Benzin	100	20	+	+	+		o	+	o	-	o	+
Benzol	100	20	+	+	+		o	o	o	-		-
Benzolna kiselina, hidratizirana	sve	40	20% o	20% o			+	+	+	+		-
Boraks, hidratizirani	razrijeđen	40					+	+	+	+		20% o
Borna kiselina, hidratizirana	razrijeđena	40	o	o	o	3% o	+	+	+			20% +
Brom, hidratizirani	100	20	-	-	-		-	-	-	-	-	-
Bromna kiselina	do 10	40	-	-	-		+	+	+			-
Butandiol, hidratizirani	do 10	20	čisti +	čisti +			+	+	+			
Butanol	do 100	20					+	+	+	+		+
Butil acetat	100	20	+	+	+		o	o	o	-		-
Cikloheksanol	-	20	+	+	+		+	+	+	+		+
Cink klorid, hidratizirani	razrijeđen	60	10% o	10% o			+	+	+	50°C +		20°C +
Cink sulfat, hidratizirani	razrijeđen	60					+	+	+			20°C +
Dizelsko gorivo		85	+	+	+	20°C +	20°C +	20°C +	20°C +			
Dušična kiselina, hidratizirana	50	20	-	-	-	3% -	o	o	o	30% +		-
Etil diklorid	100	20					o	-	-			-
Etil eter	100	20					o					o
Etilen oksid, tekući	100	20					o					
Fluor	50	40	čisti -	čisti -	čisti -		-	-	-			
Formaldehid, hidratizirani	razrijeđen	40	čisti +	čisti +	čisti +		40% +	40% +	40% +	30% +		20°C o
Fosforna kiselina, hidratizirana	razrijeđena	20	10% -	10% -	10% -	3% o	+	+	+	86% +		-
Fosforni pentoksid	100	20					+					
Fosgen, plinovit	100	20					o	o	o			
Glukoza, hidratizirana	sve	50					+	+	+			
Hidraulička tekućina, teško zapaljiva		80	+	+	+							
Hidrauličko ulje, H i HL (po DIN 51524)		100	+	+	+							
Hidro silicijfluoroksid, hidratizirani	do 30	20	-	-			+	+	+			
Hidroksilamin sulfat, hidratizirani	do 12	30					+					
Kalcij klorid, hidratizirani	zasićen	40	+	+	+		+	+	+	+		20% +
Kalij bromid, hidratizirani	sve	20	10% +	10% +	10% +		+	+	+	+		
Kalij dikromat, hidratizirani	40	20	5% o	5% o	5% o		+	+	+			+
Kalij klorid, hidratizirani	10	20	+	+	+		+	+	+	+		+
Kalij nitrat, hidratizirani	sve	20	10% +	10% +	10% +		+	+	+	+		+
Kalij permanganat, hidratizirani	zasićen	20					+			+		
Kerozin	100	80	+	+	+		20°C +	20°C +	20°C o	-		
Klor	sve	20	-	-	-		-	-	-	-		-
Klor, otopina	12,5 Cl	20	-	-	o	3% -	+	+	+	+		-

Kemijska otpornost plastičnih materijala

+ označava otpornost
o označava uvjetnu otpornost
- označava nepostojanje otpornosti

	Koncen-tracija %	pri temperaturi +°C	Poliamid	Poliamid	Poliamid	Termo-plastični poliuretan	Poli-propilen	Poli-etilen	Poli-etilen	Poli-stiren	Termo-plastični elastomer	Guma od nitrila
Reagens			**PA 6**	**PA 66**	**PA 12**	**PU**	**PP**	**HD-PE**	**LD-PE**	**PS**	**TPE**	**NBR**
Klorna kiselina	30	20	20% -	20% -	20% -	3% -	+	+	+	15% +	10% +	o
Kositrov oksid, hidratizirani	razrijeđen	40					+	+	+	-	10% +	20°C +
Krezol, hidratizirani	do 90	20	čisti -	čisti -			+	+	o	o		-
Kromal, hidratizirani	razrijeđen	40					+	+	+			20% +
Limunska kiselina	do 10	40	20% +	20% +	20% +	3% o	+	+	+	+		20% +
Magnezij karbonat, hidratizirani	zasićen	100					+			50°C +		
Magnezij klorid, hidratizirani	zasićen	20	10% +	10% +	10% +		+	+	+	+		+
Maziva na bazi dvoesterskog ulja		110	o	o								
Maziva na bazi polifenilskog estera		110	+	+	+							
Maziva na bazi silikonskog ulja		110	+	+	+							
Metilen klorid	100	20	o	o	o		o	o	-			
Mliječna kiselina, hidratizirana	do 90	20	10% +	10% +	10% +	3% o	+	+	+	80% +		+
Morska voda		40	+	+	+	20°C +	+	+	+	+	+	20°C +
Mravlja kiselina, hidratizirana	10	20	o	o	+		+	+		+		
Natrij klorat, hidratizirani	zasićen	20	10% o	10% o	10% o		+	+	+			
Natrij sulfid, hidratizirani	razrijeđen	40					+	+	+			
Nikal klorid, hidratizirani	zasićen	20	10% o	10% o	10% o		+			+		+
Nikal sulfat, hidratizirani	zasićen	20	10% o	10% o	10% o		+	+	+			+
Nitroglicerin	razrijeđen	20						-	-			
Octena kiselina	100	20					+	+	+			o
Octena kiselina	10	20	o	o	+	3% o	+	+	+	o	+	
Oksalatska kiselina	sve	20	10% o	10% o	10% o	3% o	+	+	+	+		o
Oleinska kiselina	-	20	+	+	+		+	+	+	+		o
Otopina sapuna, hidratizirana	sve	20	razrijeđena+	razrijeđena+	razrijeđena+		+	+	+			+
Otpadni plin koji sadrži SO2	niska	60						+	+			
Otpadni plin koji sadrži ugljik dioksid	sve	60						+	+			
Ozon	čisti		-	-	-		o	o	o			
Rashladne tekućine po DIN 53521		120	o	o								
Soda kaustična, hidratizirana	50	20	+	+	+		+	+	+	+	10% +	
Soda, hidratizirana	10	20	+	+	+	3% o	+	+	+	+	50% +	
Sumporna kiselina, hidratizirana	10	20	-	-	-	3% -	50% +	50% +	50% +	+	98% +	-
Toluol	100	20	+	+	+	-		o	o	o		-
Trikloretilen	100	20	o	o	o		o	o	-			
Ugljik bisulfid	100	20	+	+	+		+	o	o	-		-
Ugljik dioksid	100	60	+	+	+							20% +
Ugljik dioksid, suhi	100	60					+	+	+	50°C +		20% +
Ugljik tetraklorid	100	20	+	+	+		-	o	-	-		
Ulja i masti		20	+	+	+		o				o	
Ulje mineralno			+	+	+		20°C +	20°C +	20°C +			
Ulje za bušenje			+	+	+							
Urea, hidratizirana	do 10	40	20% +	20% +	20% +		+	+	+	+		
Vinil acetat	100	20					+					
Vodikov superoksid	100	60	20°C +	20°C +	20°C +		+	+	+			20°C +
Xylol	100	20	+	+	+		-	o	o	-		-
Željezni cijanid, hidratizirani	zasićen	60					+	+	+			
Željezni klorid, hidratizirani, neutralan	10	20	+	+		+	+	+	+		+	
Živa	čista	20	+	+	+		+	+	+	+		+

Izvor: Kunststoff-Tabellen, B. Carlowitz, Carl Hanser Verlag i drugi

Navedeni podaci mogu služiti za preliminarni izbor materijala ali time ne garantiraju svojstva proizvoda i ne potvrđuju da su određeni proizvodi odgovarajući za određenu upotrebu. Unatoč ovim podacima, kupac treba provjeriti da li je kvaliteta proizvoda odgovarajuća.

Chemical resistance of plastic materials

+ resistant
o conditionally resistant
- not resistant

	Conzen-tration %	at temp. +°C	Poly-amide	Poly-amide	Poly-amide	Thermo-plastic Polyurethane	Poly-propylene	Poly-ethylene	Poly-ethylene	Poly-styrene	Thermo-plastic elastomere	Nitrile-butadiene-rubber
Reagent			**PA 6**	**PA 66**	**PA 12**	**PU**	**PP**	**HD-PE**	**LD-PE**	**PS**	**TPE**	**NBR**
Acetaldehyde	40	20	o	o	+	+						20°C o
Acetic acid	100	20					+	+	+			o
Acetone	100	20	+	+	+	-	+	o	o			-
Acrylic acid	100	> 30	-	-	-	-						
Allyl alcohol	96	20	o	o	+		+	+	+	20% +		
Alum, hydrous	dilute	40					+	+	+	+		20°C +
Aluminium chloride, hydrous	dilute	40					+	+	+	+		20°C +
Aluminium sulphate, hydrous	dilute	40					+	+	+	+		20°C +
Ammonia solution, hydrous	saturated	20	20% +	20% +	20% +		+	+	+	20% +		
Ammonium chloride, hydrous	saturated	60				3% o	+	+	+			20% +
Ammonium nitrate, hydrous	dilute	40					+	+	+	+		20% +
Ammonium sulphate, hydrous	dilute	40					+	+	+			-
Aniline hydrochloride, hydrous	saturated	20					+	o	o			
Aniline, pure	100	20	o	o	o		+	+	+	-	+	
Benzaldehyde, hydrous	saturated	20	pure o	pure o	pure o		+			-		-
Benzine	100	20	+	+	+		o	+	o	-	o	+
Benzoic acid, hydrous	any	40	20% o	20% o			+	+	+	+		-
Benzole	100	20	+	+	+		o	o	o	-		-
Bleaching liquor	12,5 Cl	20	-	-	o	3% -	+	+	+	+		-
Borax, hydrous	dilute	40					+	+	+	+		20% o
Boric acid, hydrous	dilute	40	o	o	o	3% o	+	+	+			20% +
Bromine, liquid	100	20	-	-	-		-	-	-	-	-	-
Butanediol, hydrous	to 10	20	pure +	pure +			+	+	+			
Butanol	to 100	20					+	+	+	+		+
Butylacetate	100	20	+	+	+		o	o	o	-		-
Calcium chloride, hydrous	saturated	40	+	+	+		+	+	+	+		20% +
Carbon bisulphide	100	20	+	+	+		+	o	o	-		-
Carbon dioxide	100	60	+	+	+							20% +
Carbon dioxide, dry	100	60					+	+	+	50°C +		20% +
Carbon tetrachloride	100	20	+	+	+		-	o	-	-		
Caustic potash solution, hydrous	50	20	+	+	+		+	+	+	+	10% +	
Caustic soda lye, hydrous	10	20	+	+	+	3% o	+	+	+	+	50% +	
Chlorine	any	20	-	-	-		-	-	-	-		-
Chrome alum, hydrous	dilute	40					+	+	+			20% +
Citric Acid	to 10	40	20% +	20% +	20% +	3% o	+	+	+	+		20% +
Cooling liquids DIN 53521		120	o	o								
Copper monochloride, hydrous	saturated	20					+	+	+			+
Copper sulphate, hydrous	saturated	60					+	+	+			20% +
Cresol, hydrous	to 90	20	pure -	pure -			+	+	o	o		-
Cyclohexanol	-	20	+	+	+		+	+	+	+		+
Diesel fuel		85	+	+	+	20°C +	20°C +	20°C +	20°C +			
Drilling oil			+	+	+							
Ethanoic acid	10	20	o	o	+	3% o	+	+	+	o	+	
Ethyl alcohol, hydrous	10	20	40 Vol.%+	40 Vol.%+	40 Vol.%+		+				+	+
Ethyl dichloride	100	20					o	-	-			-
Ethyl ether	100	20					o					o
Ethylene oxide, liquid	100	20					o					
Ferric cyanide, hydrous	saturated	60					+	+	+			
Ferrous chloride, hydrous, indiff.	10	20	+	+		+	+	+	+		+	
Fluorine	50	40	pure -	pure -	pure -		-	-	-			
Formaldehyde, hydrous	dilute	40	pure +	pure +	pure +		40% +	40% +	40% +	30% +		20°C o
Formic acid, hydrous	10	20	o	o	+		+	+		+		
Glucose, hydrous	any	50					+	+	+			
Hydraulic fluid, hardly inflammable		80	+	+	+							
Hydraulic oil H and HL (DIN 51524)		100	+	+	+							

Chemical resistance of plastic materials

	Conzen-tration %	at temp. +°C	Poly-amide	Poly-amide	Poly-amide	Thermo-plastic Polyurethane	Poly-propylene	Poly-ethylene	Poly-ethylene	Poly-styrene	Thermo-plastic elastomere	Nitrile-butadiene-rubber
Reagent			**PA 6**	**PA 66**	**PA 12**	**PU**	**PP**	**HD-PE**	**LD-PE**	**PS**	**TPE**	**NBR**
Hydrobromic acid, hydrous	to 10	40	-	-	-		+	+	+			-
Hydrochloric acid, hydrous	30	20	20% -	20% -	20% -	3% -	+	+	+	15% +	10% +	o
Hydrogen	100	60	20°C +	20°C +	20°C +		+	+	+			20°C +
Hydrosilicofluoric acid, hydrous	to 30	20	-	-			+	+	+			
Hydroxylamine sulphate, hydrous	to12	30					+					
Kerosine	100	80	+	+	+		20°C +	20°C +	20°C o	-		
Lactic acid, hydrous	to 90	20	10% +	10% +	10% +	3% o	+	+	+	80% +		+
Lubricating grease, base diester oil		110	o	o								
Lubricating grease (base polyphenyl ester)		110	+	+	+							
Lubricating grease, base silicone oil		110	+	+	+							
Magnesium carbonate, hydrous	saturated	100					+			50°C+		
Magnesium chloride, hydrous	saturated	20	10% +	10% +	10% +		+	+	+	+		+
Mercury	pure	20	+	+	+		+	+	+	+		+
Methyl alcohol	100	20	+	+	+		40°C+	+	+	+	+	+
Methylene chloride	100	20	o	o	o		o	o	-			
Mineral oil			+	+	+		20°C +	20°C +	20°C +			
Nickel chloride, hydrous	saturated	20	10% o	10% o	10% o		+			+		+
Nickel sulphate, hydrous	saturated	20	10% o	10% o	10% o		+	+	+			+
Nitric acid, hydrous	50	20	-	-	-	3% -	o	o	o	30% +		-
Nitroglycerin	dilute	20						-	-			
Oil and grease		20	+	+	+		o				o	
Oleic acid	-	20	+	+	+		+	+	+	+		o
Oxalic acid	any	20	10% o	10% o	10% o	3% o	+	+	+	+		o
Ozone	pure		-	-	-		o	o	o			
Phosgene, gaesous	100	20					o	o	o			
Phoshoric acid, hydrous	dilute	20	10% -	10% -	10% -	3% o	+	+	+	86% +		-
Phosphorus pentoxide	100	20					+					
Potassium bromide, hydrous	any	20	10% +	10% +	10% +		+	+	+	+		
Potassium chloride, hydrous	10	20	+	+	+		+	+	+	+		+
Potassium dichromate, hydrous	40	20	5% o	5% o	5% o		+	+	+			+
Potassium nitrate, hydrous	any	20	10% +	10% +	10% +		+	+	+	+		+
Potassium permangnate, hydrous	saturated	20					+			+		
Sea water		40	+	+	+	20°C +	+	+	+	+	+	20°C +
Soap solution, hydrous	any	20	dilute +	dilute +	dilute +		+	+	+			+
Sodium chlorate, hydrous	saturated	20	10% o	10% o	10% o		+	+	+			
Sodium sulphide, hydrous	dilute	40					+	+	+			
Sulphuric acid, hydrous	10	20	-	-	-	3% -	50% +	50% +	50% +	+	98% +	-
Tin dichloride, hydrous	dilute	40					+	+	+	-	10% +	20°C +
Toluene	100	20	+	+	+	-		o	o	o		-
Trichloroethylene	100	20	o	o	o		o	o	-			
Urea, hydrous	to 10	40	20% +	20% +	20% +		+	+	+	+		
Vinyl acetate	100	20					+					
Waste gas, containing carbon dioxide	any	60						+	+			
Waste gas, containing SO2	low	60						+	+			
Xylene	100	20	+	+	+	-		o	o	-	-	
Zinc chloride, hydrous	dilute	60	10% o	10% o			+	+	+	50°C +		20°C +
Zinc sulphate, hydrous	dilute	60					+	+	+			20°C +

Quelle: Kunststoff-Tabellen, B. Carlowitz, Carl Hanser Verlag, and others

The above mentioned data enable a preselection. However it is not the use of the data, to promise definite properties of the products or their suitability for a concrete application purpose. The data doesn't release the purchaser to control the quality conformance.

Tablice za pretvorbu / Conversion charts

Mjere / Measures

Britanske i američke, sa približnim metričkim ekvivalentima

Mjere duljine	
1 inč/inch	= točno 25.4 millimetara
1 stopa/foot = 12 inča/inches	= točno 0.3048 metara
1 jard/yard = 3 stope/feet	= točno 0.9144 metara
1 milja/mile = 1.760 jardi/yards	= 1.609 kilometara

Metričke, sa približnim britanskim ekvivalentima

mjere duljine	
1 millimetar	= 0.039 inča/inch
1 centimetar = 10 mm	= 0.394 inča/inch
1 decimetar = 10 cm	= 3.94 inča/inches
1 metar = 10 dm	= 1.094 jardi/yards
1 dekametar = 10 m	= 10.94 jardi/yards
1 hektometar = 100 m	= 109.4 jardi/yards
1 kilometar = 1000 m	= 0.6214 milje/mile

Rebraste cijevi / Corrugated tubes

Vanjski-Ø u inčima/colima (mm) od - do Outside Ø in inches (mm) from - to	Unutarnji-Ø u inčina/colima (mm) od - do Inside Ø in Inches (mm) from - to	odgovarajući NW corresponding NW
5/32" (3.97 mm) - 3/16" (4.76 mm)	1/8" (3.18 mm)	3
1/4" (6.35 mm) - 5/16" (7.94 mm)	3/16" (4.76 mm) - 5/32" (3.97 mm)	4.5
1/4" (6.35 mm) - 5/16" (7.94 mm)	3/16" (4.76 mm) - 5/32" (3.97 mm)	4.5 AHW
3/8" (9.53 mm)	1/4" (6.35 mm)	6
3/8" (9.53 mm)	1/4" (6.35 mm)	6 AHW
7/16" (11.11 mm)	1/4" (6.35 mm)	7.5
15/32" (11.91 mm)	5/16" (7.94 mm)	8.5
7/16" (11.11 mm) - 1/2" (12.70 mm)	5/16" (7.94 mm)	8.5 AHW
1/2" (12.70 mm)	3/8" (9.53 mm)	10
5/8" (15.88 mm)	3/8" (9.53 mm) - 7/16" (11.11 mm)	11 AHW
5/8" (15.88 mm)	7/16" (11.11 mm)	12
5/8" (15.88 mm)	1/2" (12.70 mm)	13
11/16" (17.46 mm)	9/16" (14.29 mm)	14
3/4" (19.05 mm) - 7/8" (22.23 mm)	1/2" (12.70 mm) - 5/8" (15.88 mm)	15 AHW
3/4" (19.05 mm)	19/32" (15.08 mm)	16
13/16" (20.64 mm) - 7/8" (22.23 mm)	5/8" (15.88 mm)	17
15/16" (23.81 mm)	3/4" (19.05 mm)	19
1" (25.40 mm) - 1 1/16" (26.99 mm)	3/4" (19.05 mm)	19 AHW
1" (25.40 mm)	27/32" (21.43 mm)	22
1 1/16" (26.99 mm) - 1 1/8" (28.58 mm)	7/8" (22.23 mm)	23
1 1/4" (31.75 mm)	1" (25.40 mm)	26
1 1/4" (31.75 mm)	7/8" (22.23 mm) - 1" (25.40 mm) - 1 1/16" (26.99 mm)	26 AHW
1 3/8" (34.93 mm) - 1 1/2" (38.10 mm)	1 1/16" (26.99 mm)	29
1 1/2" (38.10 mm)	1 1/4" (31.75 mm) - 1 1/2" (38.10 mm)	34 AHW
1 11/16" (42.86 mm) - 1 7/8" (47.63 mm)	1 1/4" (31.75 mm) - 1 3/8" (34.93 mm)	37
2 1/8" (53.98 mm)	1 1/2" (38.10 mm) - 1 7/8" (47.63 mm)	50

Milimetri u inče / mm to inches

Vrijednost pretvorbe / Exchange value: 1 inč = 25,4 mm

	inč/col									
mm	0	1	2	3	4	5	6	7	8	9
0	0	0.03937"	0.07874"	0.11811"	0.15748"	0.19685"	0.23622"	0.27559"	0.31496"	0.35433"
10	0.39370"	0.43307"	0.47244"	0.51181"	0.55118"	0.59055"	0.62992"	0.66929"	0.70866"	0.74809"
20	0.78740"	0.82677"	0.86614"	0.90551"	0.94488"	0.98425"	1.02362"	1.06299"	1.10236"	1.14173"
30	1.18110"	1.22047"	1.25984"	1.29921"	1.33858"	1.37795"	1.41732"	1.45669"	1.49606"	1.53543"
40	1.57480"	1.61417"	1.65354"	1.69291"	1.73228"	1.77165"	1.81102"	1.85039"	1.88976"	1.92913"
50	1.96851"	2.00787"	2.04724"	2.08661"	2.12598"	2.16535"	2.20472"	2.24409"	2.28346"	2.32283"
60	2.36221"	2.40157"	2.44095"	2.48031"	2.51968"	2.55905"	2.59842"	2.63779"	2.67716"	2.71653"
70	2.75591"	2.79527"	2.83465"	2.87401"	2.91338"	2.95275"	2.99212"	3.03149"	3.07086"	3.11024"
80	3.14961"	3.18897"	3.22835"	3.26772"	3.30709"	3.34646"	3.38583"	3.42520"	3.46457"	3.50394"
90	3.54331"	3.58268"	3.62205"	3.66142"	3.70079"	3.74016"	3.77953"	3.81890	3.85827"	3.89764"

Primjer/Example: 64.362 mm = 64 mm + 0.36 mm + 0.002 mm
= 2.51968 + 0.01417 + 0.00008 = 2.53393"

Normalni profil - AHW / Normal Profile - Automotive High Wave

Normalni profil + UFW NW	AHW NW	Normalni profil + UFW NW	AHW NW	Normalni profil + UFW NW	AHW NW	Normalni profil + UFW NW	AHW NW
3	-	10	8,5	17	15	29	-
4,5	-	12	-	19	-	-	34
6	6	13	11	22	19	37	-
7,5	6	14	-	23	-	50	-
8,5	-	16	-	26	25		

Tablice za pretvorbu / Conversion charts

Inči u milimetre

od 1/64" do 12"
prema DIN 4890 tablica 2
1 inč = 25,400000 milimetara, vidi DIN 4890 tablica 1

Inches - mm

from 1/64" to 12"
accd. to DIN 4890 sheet 2
1 Zoll = 25,400000 Millimeter, see DIN 4890 sheet 1

Inč/col	0	1	2	3	4	5	6	7	8	9	10	11	12
	inča	inč	inča	inča	inča	inča	inča	inča	inča	inča	inča	inča	inča
	mm	mm	mm	mm	mm	mm	mm	mm	mm	mm	mm	mm	mm
0	**0**	25.400	50.800	76.200	101.600	127.00	152.40	177.80	203.20	228.60	254.00	279.40	304.80
1/64	0.397	25.797	51.197	76.597	102.997	127.40	152.80	178.20	203.60	229.00	254.40	279.80	305.20
1/32	0.794	26.194	51.594	76.994	102.394	127.79	153.19	178.60	203.99	229.39	254.79	280.19	305.59
3/64	1.191	26.591	51.991	77.391	102.791	128.19	153.59	178.99	204.39	229.79	255.19	280.59	306.99
1/16	**1.588**	**26.988**	**52.388**	**77.788**	**103.188**	**128.59**	**153.99**	**179.39**	**204.79**	**230.19**	**255.59**	**280.99**	**306.39**
5/64	1.984	27.384	52.784	78.184	103.584	128.98	154.38	179.78	205.18	230.58	255.99	281.39	306.79
3/32	2.381	27.781	53.181	78.581	103.981	129.38	154.78	180.18	205.58	230.98	256.38	281.78	307.18
7/64	2.778	28.178	53.578	78.978	104.978	129.78	155.18	180.58	205.98	231.38	256.78	282.18	307.58
1/8	**3.175**	**28.575**	**53.975**	**79.375**	**104.775**	**130.18**	**155.58**	**180.98**	**206.38**	**231.78**	**257.18**	**282.58**	**307.98**
9/64	3.572	28.972	54.372	79.772	105.172	130.57	155.97	181.37	206.77	232.17	257.57	282.97	308.37
5/32	3.969	29.369	54.769	80.169	105.569	130.97	156.37	181.77	207.17	232.57	257.97	283.37	308.77
11/64	4.366	29.766	55.166	80.566	105.966	131.37	156.77	182.17	207.57	232.97	258.37	283.77	309.17
3/16	**4.763**	**30.163**	**55.563**	**80.963**	**106.363**	**131.76**	**157.16**	**182.56**	**207.96**	**233.36**	**258.76**	**284.16**	**309.56**
13/64	5.159	30.559	55.959	81.359	106.759	132.16	157.56	182.96	208.36	233.76	259.16	284.56	309.96
7/32	5.556	30.956	56.356	81.756	107.156	132.56	157.96	183.36	208.76	234.16	259.56	284.96	310.36
15/64	5.953	31.353	56.753	82.153	107.553	132.95	158.35	183.75	209.15	234.55	259.95	285.35	310.75
1/4	**6.350**	**31.750**	**57.150**	**82.550**	**107.950**	**133.35**	**158.75**	**184.15**	**209.55**	**234.95**	**260.35**	**285.75**	**311.15**
17/64	6.747	32.147	57.547	82.947	108.347	133.75	159.15	184.55	209.95	235.35	260.75	286.15	311.55
9/32	7.144	32.544	57.944	83.344	108.744	134.14	159.54	184.94	210.34	235.74	261.14	286.54	311.94
19/64	7.541	32.941	58.341	83.741	109.141	134.54	159.94	185.34	210.74	236.14	261.54	286.94	312.34
5/16	**7.938**	**33.338**	**58.738**	**84.138**	**109.538**	**134.94**	**160.34**	**185.74**	**211.14**	**236.54**	**261.94**	**287.34**	**312.74**
21/64	8.334	33.734	59.134	84.534	109.934	135.33	160.73	186.13	211.53	236.93	262.34	287.74	313.14
11/32	8.731	34.131	59.531	84.931	110.331	135.73	161.13	186.53	211.93	237.33	262.73	288.13	313.53
23/64	9.128	34.528	59.929	85.328	110.728	136.13	161.53	186.93	212.33	237.73	263.13	288.53	313.93
3/8	**9.525**	**34.925**	**60.325**	**85.725**	**111.125**	**136.53**	**161.93**	**187.32**	**212.73**	**238.13**	**263.53**	**288.93**	**314.33**
25/64	9.922	35.322	60.722	85.122	111.522	136.92	162.32	187.72	213.12	238.52	263.92	289.32	314.72
13/32	10.319	35.719	61.119	86.519	111.919	137.32	162.72	188.12	213.52	238.92	264.32	289.72	315.12
27/64	10.716	36.116	61.516	86.916	112.316	137.72	163.12	188.52	213.92	239.32	264.72	290.12	315.52
7/16	**11.113**	**36.513**	**61.913**	**87.313**	**112.713**	**138.11**	**163.51**	**188.91**	**214.31**	**239.71**	**265.11**	**290.51**	**315.91**
29/64	11.509	36.909	62.309	87.709	113.109	138.51	163.91	189.31	214.71	240.11	265.51	290.91	316.31
15/32	11.906	37.306	62.706	88.106	113.506	138.91	164.31	189.71	215.11	240.51	265.91	291.31	316.71
31/64	12.303	37.703	63.103	88.503	113.903	139.30	164.70	190.10	215.50	240.90	266.30	291.70	317.10
1/2	**12.700**	**38.100**	**63.500**	**88.900**	**114.300**	**139.70**	**165.10**	**190.50**	**215.90**	**241.30**	**266.70**	**292.10**	**317.50**
33/64	13.097	38.497	63.897	89.297	114.697	140.10	165.50	190.90	216.30	241.70	267.10	292.50	317.90
17/32	13.494	38.894	64.294	89.694	115.094	140.49	165.89	191.29	216.69	242.09	267.49	292.89	318.29
35/64	13.891	39.291	64.691	90.091	115.491	140.89	166.29	191.69	217.09	242.49	267.89	293.29	318.69
9/16	**14.288**	**39.688**	**65.088**	**90.488**	**115.888**	**141.29**	**166.69**	**192.09**	**217.49**	**242.89**	**268.29**	**293.69**	**319.09**
37/64	14.684	40.084	65.484	90.884	116.284	141.68	167.08	192.48	217.88	243.28	268.69	294.09	319.49
19/32	15.081	40.481	65.881	91.281	116.681	142.08	167.48	192.88	218.28	243.68	269.08	294.48	319.88
39/64	15.478	40.878	66.287	91.678	117.078	142.48	167.88	193.28	218.68	244.08	269.48	294.88	320.28
5/8	**15.875**	**41.275**	**66.675**	**92.075**	**117.475**	**142.88**	**168.28**	**193.68**	**219.08**	**244.48**	**269.88**	**295.28**	**320.68**
41/64	16.272	41.672	67.072	92.472	117.872	143.27	168.67	194.07	219.47	244.87	270.27	295.67	321.07
21/32	16.669	42.069	67.469	92.869	118.269	143.67	169.07	194.47	219.87	245.27	270.67	296.07	321.47
43/64	17.066	42.466	67.866	93.266	118.666	144.07	169.47	194.87	220.27	245.67	271.07	296.47	321.87
11/16	**17.463**	**42.863**	**68.263**	**93.663**	**119.063**	**144.46**	**169.86**	**195.26**	**220.66**	**246.06**	**271.46**	**296.86**	**322.26**
45/64	17.859	43.259	68.659	94.059	119.459	144.86	170.26	195.66	221.06	246.46	271.86	297.26	322.66
23/32	18.256	43.656	69.056	94.456	119.856	145.26	170.66	196.06	221.46	246.86	272.26	297.66	323.06
47/64	18.653	44.053	69.453	94.853	120.253	145.65	171.05	195.45	221.85	247.25	272.65	298.05	323.45
3/4	**19.050**	**44.450**	**69.850**	**95.250**	**120.650**	**146.05**	**171.45**	**196.85**	**222.25**	**247.65**	**273.05**	**298.45**	**323.85**
49/64	19.447	44.847	70.247	95.647	121.047	146.45	171.85	197.25	222.65	248.05	273.45	298.85	324.25
25/32	19.844	45.244	70.644	96.044	121.444	146.84	172.24	197.64	223.04	248.44	273.84	299.24	324.64
51/64	20.241	45.641	71.041	96.441	121.841	147.24	172.64	198.04	223.44	248.64	274.24	299.64	325.04
13/16	**20.638**	**46.038**	**71.438**	**96.838**	**122.238**	**147.64**	**173.04**	**198.44**	**223.84**	**249.24**	**274.64**	**300.04**	**325.44**
53/64	21.034	46.434	71.834	97.234	122.634	148.03	173.43	198.83	224.23	249.64	275.04	300.44	325.84
27/32	21.432	46.831	72.231	97.631	123.031	148.43	173.83	199.23	224.63	250.03	275.43	300.83	326.23
55/64	21.828	47.228	72.628	98.028	123.428	148.83	174.23	199.63	225.03	250.43	275.83	301.23	326.63
7/8	**22.225**	**47.625**	**73.025**	**98.425**	**123.825**	**149.23**	**174.63**	**200.03**	**225.43**	**250.83**	**276.23**	**301.63**	**327.03**
57/65	22.622	48.022	73.422	98.822	124.222	149.62	175.02	200.42	225.82	251.22	276.62	302.02	327.42
29/32	23.019	48.419	73.819	99.219	124.619	150.02	175.42	200.82	226.22	251.62	277.02	302.42	327.82
59/64	23.416	48.816	74.216	99.616	125.016	150.42	175.82	201.22	226.62	252.02	277.42	302.82	328.22
15/16	**23.813**	**49.213**	**47.613**	**100.013**	**125.413**	**150.81**	**176.21**	**201.61**	**227.01**	**252.41**	**277.81**	**303.21**	**328.61**
61/64	24.209	49.609	75.009	100.409	125.809	151.21	176.61	202.01	227.41	252.81	278.21	303.61	329.01
31/32	24.606	50.006	75.406	100.806	126.206	151.61	177.01	202.41	227.81	253.21	278.61	304.01	329.41
63/64	25.003	40.403	75.803	101.203	126.603	152.00	177.40	202.80	228.20	253.60	279.00	304.40	329.80

Tablica navoja / Thread Chart

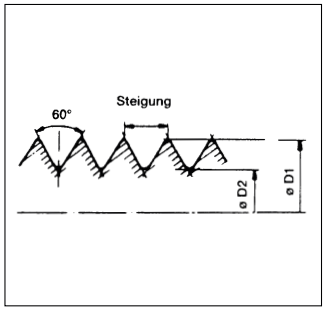

Metrički ISO-navoj prema EN 60423 / Metric ISO thread to EN 60423				specifikacija Schlemmera Schlemmer Specification
ISO ISO	korak navoja mm pitch mm	vanjski Ø D1 mm External Ø D1 mm	Ø jezgre D2 mm Core Ø D2 mm	promjer otvora mm Clearance hole mm
10	1,0	10,0	9,0	10,2
12	1,5	12,0	10,5	12,2
16	1,5	16,0	14,5	16,2
20	1,5	20,0	18,5	20,2
25	1,5	25,0	23,5	25,2
32	1,5	32,0	30,5	32,2
40	1,5	40,0	38,5	40,2
50	1,5	50,0	48,5	50,2
63	1,5	63,0	61,5	63,2
75	1,5	75,0	73,5	75,2
80	2,0	80,0	78,0	80,2
90	2,0	90,0	88,0	90,2

Usporedba, promjera navoja
Comparsion, thread diameter

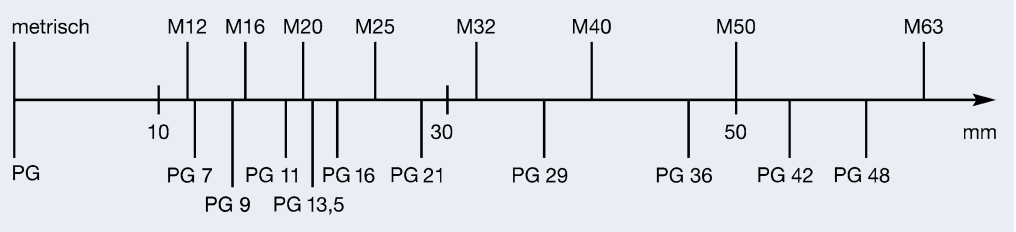

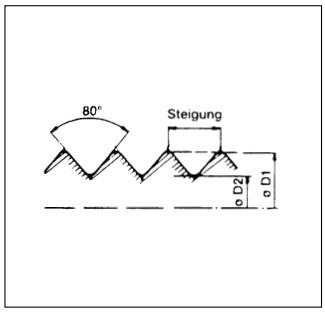

PG-navoj / PG thread				specifikacija Schlemmera Schlemmer Specification
PG PG	korak navoja mm Pitch mm	vanjski Ø D1 mm External Ø D1 mm	Ø jezgre D2 mm Core Ø D2 mm	promjer otvora mm Clearance hole mm
7	1,27	12,5	11,28	12,7
9	1,41	15,2	13,86	15,4
11	1,41	18,6	17,26	18,8
13	1,41	20,4	19,06	20,7
16	1,41	22,5	21,16	22,8
21	1,587	28,3	26,78	28,6
29	1,587	37,0	35,48	37,4
36	1,587	47,0	45,58	47,5
42	1,587	54,0	52,48	54,5
48	1,588	59,3	57,78	59,8

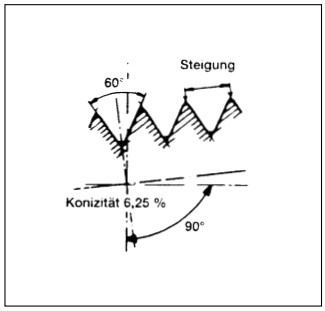

NPT (konusni) američki cijevni navoj / NPT (conical) American pipe thread			
NPT NPT	korak navoja mm Pitch mm	vanjski Ø mm External Ø mm	broj navoja po jedinici dužine n Number of threads per unit length n
1/4"	1,411	13,616	18
3/8"	1,411	17,055	18
1/2"	1,814	21,223	14
3/4"	1,814	26,568	14
1"	2,208	33,227	11 1/2
1 1/4"	2,208	41,984	11 1/2
1 1/2"	2,208	48,053	11 1/2
2"	2,208	60,091	11 1/2
2 1/2"	3,175	72,699	8
3"	3,175	88,608	8
3 1/2"	3,175	100,013	8

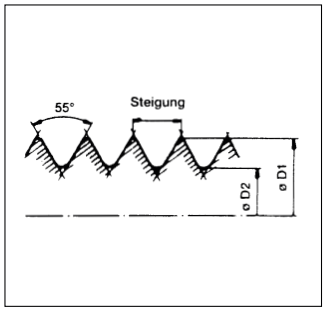

Plinski navoj / Gas pipe thread				specifikacija Schlemmera Schlemmer Specification
BSP BSP	korak navoja mm Pitch mm	vanjski Ø D1 mm External Ø D1 mm	Ø jezgre D2 mm Core Ø D2 mm	promjer otvora mm Clearance hole Ø mm
1/4"	1,337	13,157	11,145	13,4
3/8"	1,337	16,662	14,950	17,0
1/2"	1,814	20,955	18,631	21,3
5/8"	1,814	26,441	24,117	26,8
1"	2,309	33,249	30,291	33,7
1 1/4"	2,309	41,910	38,952	42,4
1 1/2"	2,309	47,803	44,845	48,3
2"	2,309	59,614	56,656	60,2
2 1/2"	2,309	75,184	72,226	75,7
3"	2,309	87,884	84,926	88,5
3 1/2"	2,309	100,330	97,372	101,0
4"	2,309	113,030	110,072	114,0

Indeks brojeva artikala
Art.-No. Index

	stranica		page
Indeks brojeva artikala	1-29	**Art.-No. Index**	1-29

Broj artikla Art. no.	poglavlje chapter	stranica page	Broj artikla Art. no.	poglavlje chapter	stranica page	Broj artikla Art. no.	poglavlje chapter	stranica page	Broj artikla Art. no.	poglavlje chapter	stranica page
0000086	2.2	63	0300217	2.2	74	0413035	2.2	83	1200127	2.1	13
0000116	2.2	63	0300284	2.2	74	0413040	2.2	83	1200135	2.1	13
0000140	2.2	63	0300373	2.2	74	0413050	2.2	83	1200143	2.1	13
0000167	2.2	63	0300446	2.2	74	0414770	2.2	85	1200160	2.1	13
0000183	2.2	63	0300489	2.2	74	0414771	2.2	85	1200178	2.1	13
0000230	2.2	63	0401102	2.2	82	0414772	2.2	85	1200194	2.1	13
0000329	2.2	63	0401129	2.2	82	0414773	2.2	85	1200224	2.1	13
0000400	2.2	63	0401153	2.2	82	0414774	2.2	85	1200232	2.1	13
0000450	2.2	63	0401200	2.2	82	0414775	2.2	85	1200263	2.1	13
0000507	2.2	63	0401382	2.2	82	0414776	2.2	85	1200267	2.1	13
0001082	2.2	63	0401501	2.2	82	0414777	2.2	85	1200291	2.1	13
0001112	2.2	63	0401757	2.2	82	0414786	2.2	84	1200372	2.1	13
0001147	2.2	63	0402095	2.2	77	0414788	2.2	84	1200500	2.1	13
0001163	2.2	63	0402109	2.2	77	0414800	2.2	84	1200803	2.1	13
0001180	2.2	63	0402125	2.2	77	0414801	2.2	84	1200804	2.1	13
0001236	2.2	63	0402141	2.2	77	0414802	2.2	84	1200806	2.1	13
0001325	2.2	63	0402142	2.2	77	0414803	2.2	84	1200807	2.1	13
0001406	2.2	63	0402150	2.2	77	0414804	2.2	84	1200808	2.1	13
0001457	2.2	63	0402206	2.2	77	0414805	2.2	84	1200810	2.1	13
0001503	2.2	63	0402257	2.2	77	0803065	2.2	52	1200812	2.1	13
0100072	2.2	67	0402303	2.2	77	0803081	2.2	52	1200813	2.1	13
0100102	2.2	67	0402389	2.2	77	0803103	2.2	52	1200814	2.1	13
0100137	2.2	67	0402508	2.2	77	0803146	2.2	52	1200816	2.1	13
0100153	2.2	67	0402753	2.2	77	0803189	2.2	52	1200817	2.1	13
0100170	2.2	67	0402761	2.2	77	0803227	2.2	52	1200819	2.1	13
0100218	2.2	67	0402834	2.2	77	0803278	2.2	52	1200822	2.1	13
0100285	2.2	67	0402842	2.2	77	0803324	2.2	52	1200823	2.1	13
0100374	2.2	67	0402869	2.2	77	0803367	2.2	52	1200826	2.1	13
0100447	2.2	67	0402877	2.2	77	0803405	2.2	52	1200829	2.1	13
0100480	2.2	67	0402885	2.2	77	1000071	2.2	56	1200837	2.1	13
0101079	2.2	67	0402893	2.2	77	1000080	2.2	56	1200850	2.1	13
0101109	2.2	67	0402907	2.2	77	1000098	2.2	56	1202610	2.1	14
0101133	2.2	67	0402915	2.2	77	1000110	2.2	56	1202611	2.1	14
0101150	2.2	67	0402923	2.2	77	1000128	2.2	56	1202612	2.1	14
0101176	2.2	67	0403900	2.2	66	1000136	2.2	56	1202613	2.1	14
0101214	2.2	67	0403901	2.2	66	1000160	2.2	56	1202614	2.1	14
0101281	2.2	67	0403902	2.2	66	1000195	2.2	56	1202630	2.1	14
0101370	2.2	67	0403903	2.2	66	1000209	2.2	56	1202631	2.1	14
0101486	2.2	67	0403904	2.2	66	1000225	2.2	56	1202632	2.1	14
0102075	2.2	67	0403905	2.2	66	1000233	2.2	56	1202633	2.1	14
0102105	2.2	67	0404101	2.2	79	1002015	2.2	54	1202634	2.1	14
0102130	2.2	67	0404128	2.2	79	1002023	2.2	54	1202868	2.1	32
0102156	2.2	67	0404152	2.2	79	1002031	2.2	54	1203070	2.1	17
0102172	2.2	67	0404209	2.2	79	1002040	2.2	54	1203089	2.1	17
0102210	2.2	67	0404250	2.2	79	1002058	2.2	54	1203100	2.1	17
0102288	2.2	67	0404306	2.2	79	1002066	2.2	54	1203126	2.1	17
0102377	2.2	67	0404344	2.2	79	1002074	2.2	54	1203134	2.1	17
0102440	2.2	67	0404350	2.2	79	1002082	2.2	54	1203142	2.1	17
0102482	2.2	67	0404381	2.2	79	1002090	2.2	54	1203177	2.1	17
0102507	2.2	67	0404500	2.2	79	1002104	2.2	54	1203223	2.1	17
0102510	2.2	67	0404756	2.2	79	1100010	2.2	45	1203231	2.1	17
0102513	2.2	67	0405108	2.2	78	1100013	2.2	45	1203266	2.1	17
0102515	2.2	67	0405124	2.2	78	1100014	2.2	45	1203290	2.1	17
0102517	2.2	67	0405159	2.2	78	1100016	2.2	45	1203371	2.1	17
0102521	2.2	67	0405205	2.2	78	1100022	2.2	45	1203509	2.1	17
0102528	2.2	67	0405210	2.2	78	1100030	2.2	45	1203520	2.1	18
0200077	2.2	71	0405344	2.2	78	1100038	2.2	45	1203521	2.1	18
0200107	2.2	71	0405356	2.2	78	1100045	2.2	45	1203522	2.1	18
0200131	2.2	71	0405388	2.2	78	1100050	2.2	45	1203523	2.1	18
0200158	2.2	71	0405507	2.2	78	1200013	2.1	13	1203524	2.1	18
0200174	2.2	71	0405531	2.2	78	1200016	2.1	13	1203525	2.1	18
0200212	2.2	71	0405752	2.2	78	1200021	2.1	13	1203526	2.1	18
0200280	2.2	71	0407100	2.2	80	1200022	2.1	13	1203527	2.1	18
0200379	2.2	71	0407127	2.2	80	1200023	2.1	13	1203528	2.1	18
0200441	2.2	71	0407143	2.2	80	1200029	2.1	13	1203529	2.1	18
0200484	2.2	71	0407208	2.2	80	1200037	2.1	13	1203530	2.1	18
0201078	2.2	71	0407380	2.2	80	1200040	2.1	13	1203531	2.1	18
0201108	2.2	71	0407500	2.2	80	1200041	2.1	13	1203540	2.1	18
0201132	2.2	71	0407755	2.2	80	1200044	2.1	13	1203541	2.1	18
0201159	2.2	71	0408093	2.2	81	1200054	2.1	13	1203542	2.1	18
0201175	2.2	71	0408115	2.2	81	1200061	2.1	13	1203543	2.1	18
0201213	2.2	71	0408166	2.2	81	1200062	2.1	13	1203544	2.1	18
0201281	2.2	71	0408212	2.2	81	1200064	2.1	13	1203545	2.1	18
0201378	2.2	71	0408298	2.2	81	1200066	2.1	13	1203546	2.1	18
0201442	2.2	71	0408360	2.2	81	1200067	2.1	13	1203547	2.1	18
0201485	2.2	71	0408372	2.2	81	1200068	2.1	13	1203548	2.1	18
0300071	2.2	74	0408380	2.2	81	1200069	2.1	13	1203549	2.1	18
0300101	2.2	74	0413012	2.2	83	1200070	2.1	13	1203550	2.1	18
0300136	2.2	74	0413016	2.2	83	1200073	2.1	13	1203551	2.1	18
0300152	2.2	74	0413020	2.2	83	1200089	2.1	13	1203612	2.1	17
0300179	2.2	74	0413026	2.2	83	1200100	2.1	13	1203614	2.1	17

Broj artikla	poglavlje	stranica	Broj artikla	poglavlje	stranica	Broj artikla	poglavlje	stranica	Broj artikla	poglavlje	stranica
Art. no.	chapter	page	Art. no.	chapter	page	Art. no.	chapter	page	Art. no.	chapter	page
1203617	2.1	17	1206260	2.1	17	1210217	2.1	25	1211828	2.1	25
1203623	2.1	17	1206290	2.1	17	1210219	2.1	25	1211829	2.1	25
1203907	2.1	13	1206370	2.1	17	1210222	2.1	25	1211832	2.1	25
1203908	2.1	13	1206508	2.1	17	1210223	2.1	25	1211841	2.1	25
1203910	2.1	13	1206520	2.1	18	1210226	2.1	25	1211842	2.1	25
1203912	2.1	13	1206521	2.1	18	1210229	2.1	25	1211843	2.1	25
1203913	2.1	13	1206522	2.1	18	1210237	2.1	25	1211844	2.1	25
1203914	2.1	13	1206523	2.1	18	1210304	2.1	25	1211845	2.1	25
1203917	2.1	13	1206524	2.1	18	1210307	2.1	25	1212079	2.1	15
1203922	2.1	13	1206525	2.1	18	1210308	2.1	25	1212109	2.1	15
1203923	2.1	13	1206526	2.1	18	1210310	2.1	25	1212125	2.1	15
1203929	2.1	13	1206527	2.1	18	1210313	2.1	25	1212133	2.1	15
1203937	2.1	13	1206528	2.1	18	1210317	2.1	25	1212141	2.1	15
1203950	2.1	13	1206529	2.1	18	1210319	2.1	25	1212160	2.1	15
1203957	2.1	13	1206530	2.1	18	1210322	2.1	25	1212176	2.1	15
1203958	2.1	13	1206531	2.1	18	1210323	2.1	25	1212192	2.1	15
1203960	2.1	13	1206540	2.1	18	1210326	2.1	25	1212222	2.1	15
1203962	2.1	13	1206541	2.1	18	1210329	2.1	25	1212230	2.1	15
1203963	2.1	13	1206542	2.1	18	1210337	2.1	25	1212260	2.1	15
1203964	2.1	13	1206543	2.1	18	1211104	2.1	25	1212290	2.1	15
1203967	2.1	13	1206544	2.1	18	1211106	2.1	25	1212341	2.1	15
1203972	2.1	13	1206545	2.1	18	1211107	2.1	25	1212370	2.1	15
1203973	2.1	13	1206546	2.1	18	1211108	2.1	25	1212508	2.1	15
1203979	2.1	13	1206547	2.1	18	1211111	2.1	25	1212607	2.1	15
1203987	2.1	13	1206548	2.1	18	1211115	2.1	25	1212608	2.1	15
1203990	2.1	13	1206549	2.1	18	1211119	2.1	25	1212610	2.1	15
1205030	2.1	13	1206550	2.1	18	1211126	2.1	25	1212612	2.1	15
1205045	2.1	13	1206551	2.1	18	1211134	2.1	25	1212613	2.1	15
1205060	2.1	13	1206707	2.1	34	1211150	2.1	25	1212614	2.1	15
1205072	2.1	13	1206710	2.1	34	1211151	2.1	25	1212616	2.1	15
1205080	2.1	13	1206713	2.1	34	1211152	2.1	25	1212617	2.1	15
1205102	2.1	13	1206716	2.1	34	1211153	2.1	25	1212619	2.1	15
1205129	2.1	13	1206717	2.1	34	1211155	2.1	25	1212622	2.1	15
1205137	2.1	13	1206722	2.1	34	1211159	2.1	25	1212623	2.1	15
1205145	2.1	13	1206723	2.1	34	1211162	2.1	25	1212626	2.1	15
1205161	2.1	13	1206726	2.1	34	1211165	2.1	25	1212629	2.1	15
1205170	2.1	13	1206729	2.1	34	1211167	2.1	25	1212634	2.1	15
1205196	2.1	13	1206737	2.1	34	1211304	2.1	25	1212637	2.1	15
1205226	2.1	13	1206750	2.1	34	1211306	2.1	25	1212650	2.1	15
1205234	2.1	13	1206770	2.1	34	1211307	2.1	25	1212850	2.1	15
1205269	2.1	13	1206807	2.1	34	1211308	2.1	25	1212919	2.1	15
1205290	2.1	13	1206810	2.1	34	1211311	2.1	25	1212920	2.1	15
1205344	2.1	13	1206813	2.1	34	1211315	2.1	25	1212921	2.1	15
1205374	2.1	13	1206816	2.1	34	1211319	2.1	25	1212923	2.1	15
1205501	2.1	13	1206817	2.1	34	1211326	2.1	25	1212924	2.1	15
1205503	2.1	13	1206822	2.1	34	1211334	2.1	25	1212925	2.1	15
1205504	2.1	13	1206823	2.1	34	1211350	2.1	25	1212926	2.1	15
1205506	2.1	13	1206826	2.1	34	1211351	2.1	25	1212927	2.1	15
1205507	2.1	13	1206829	2.1	34	1211353	2.1	25	1212928	2.1	15
1205508	2.1	13	1206837	2.1	34	1211355	2.1	25	1212929	2.1	15
1205510	2.1	13	1206850	2.1	34	1211359	2.1	25	1212930	2.1	15
1205512	2.1	13	1206870	2.1	34	1211362	2.1	25	1212931	2.1	15
1205513	2.1	13	1210004	2.1	25	1211365	2.1	25	1212932	2.1	15
1205514	2.1	13	1210007	2.1	25	1211367	2.1	25	1213007	2.1	15
1205516	2.1	13	1210008	2.1	25	1211369	2.1	25	1213008	2.1	15
1205517	2.1	13	1210010	2.1	25	1211403	2.1	25	1213010	2.1	15
1205519	2.1	13	1210013	2.1	25	1211405	2.1	25	1213012	2.1	15
1205522	2.1	13	1210017	2.1	25	1211407	2.1	25	1213013	2.1	15
1205523	2.1	13	1210019	2.1	25	1211408	2.1	25	1213014	2.1	15
1205526	2.1	13	1210022	2.1	25	1211409	2.1	25	1213016	2.1	15
1205529	2.1	13	1210023	2.1	25	1211410	2.1	25	1213017	2.1	15
1205534	2.1	13	1210026	2.1	25	1211411	2.1	25	1213019	2.1	15
1205537	2.1	13	1210029	2.1	25	1211412	2.1	25	1213022	2.1	15
1205550	2.1	13	1210037	2.1	25	1211413	2.1	25	1213023	2.1	15
1206003	2.1	17	1210104	2.1	25	1211414	2.1	25	1213026	2.1	15
1206070	2.1	17	1210107	2.1	25	1211415	2.1	25	1213029	2.1	15
1206079	2.1	17	1210108	2.1	25	1211443	2.1	25	1213034	2.1	15
1206085	2.1	17	1210110	2.1	25	1211445	2.1	25	1213037	2.1	15
1206103	2.1	17	1210113	2.1	25	1211447	2.1	25	1213050	2.1	15
1206109	2.1	17	1210117	2.1	25	1211448	2.1	25	1213107	2.1	15
1206110	2.1	17	1210119	2.1	25	1211449	2.1	25	1213108	2.1	15
1206113	2,1	17	1210122	2.1	25	1211450	2.1	25	1213110	2.1	15
1206117	2.1	17	1210123	2.1	25	1211451	2.1	25	1213112	2.1	15
1206125	2.1	17	1210126	2.1	25	1211452	2.1	25	1213113	2.1	15
1206130	2.1	17	1210129	2.1	25	1211453	2.1	25	1213114	2.1	15
1206140	2.1	17	1210137	2.1	25	1211454	2.1	25	1213116	2.1	15
1206160	2.1	17	1210204	2.1	25	1211455	2.1	25	1213117	2.1	15
1206176	2.1	17	1210207	2.1	25	1211808	2.1	25	1213119	2.1	15
1206190	2.1	17	1210208	2.1	25	1211822	2.1	25	1213122	2.1	15
1206220	2.1	17	1210210	2.1	25	1211823	2.1	25	1213123	2.1	15
1206230	2.1	17	1210213	2.1	25	1211826	2.1	25	1213126	2.1	15

Broj artikla Art. no.	poglavlje chapter	stranica page	Broj artikla Art. no.	poglavlje chapter	stranica page	Broj artikla Art. no.	poglavlje chapter	stranica page	Broj artikla Art. no.	poglavlje chapter	stranica page
1213129	2.1	15	1215466	2.1	22	1215937	2.1	22	1223315	2.1	24
1213134	2.1	15	1215469	2.1	22	1215950	2.1	22	1223317	2.1	24
1213137	2.1	15	1215477	2.1	22	1215964	2.1	22	1223319	2.1	24
1213150	2.1	15	1215504	2.1	22	1215966	2.1	22	1223322	2.1	24
1214089	2.1	16	1215506	2.1	22	1215968	2.1	22	1223323	2.1	24
1214100	2.1	16	1215508	2.1	22	1215971	2.1	22	1223326	2.1	24
1214127	2.1	16	1215511	2.1	22	1215975	2.1	22	1223329	2.1	24
1214143	2.1	16	1215515	2.1	22	1215979	2.1	22	1229001	2.1	14
1214178	2.1	16	1215519	2.1	22	1215986	2.1	22	1229002	2.1	14
1214235	2.1	16	1215526	2.1	22	1215994	2.1	22	1229003	2.1	14
1214236	2.1	16	1215534	2.1	22	1219004	2.1	30	1229004	2.1	14
1214291	2.1	16	1215554	2.1	22	1219007	2.1	30	1229005	2.1	14
1214292	2.1	16	1215556	2.1	22	1219008	2.1	30	1229006	2.1	14
1214375	2.1	16	1215558	2.1	22	1219010	2.1	30	1229007	2.1	14
1214376	2.1	16	1215561	2.1	22	1219013	2.1	30	1229008	2.1	14
1214502	2.1	16	1215565	2.1	22	1219014	2.1	30	1229010	2.1	14
1215013	2.1	22	1215569	2.1	22	1219017	2.1	30	1229011	2.1	14
1215019	2.1	22	1215576	2.1	22	1219018	2.1	30	1229012	2.1	14
1215023	2.1	22	1215586	2.1	22	1219019	2.1	30	1229013	2.1	14
1215043	2.1	22	1215704	2.1	22	1219020	2.1	30	1229014	2.1	14
1215060	2.1	22	1215706	2.1	22	1219023	2.1	30	1229015	2.1	14
1215086	2.1	22	1215707	2.1	22	1219029	2.1	30	1229016	2.1	14
1215113	2.1	22	1215708	2.1	22	1219037	2.1	30	1229017	2.1	14
1215116	2.1	22	1215710	2.1	22	1220011	2.1	31	1229019	2.1	14
1215119	2.1	22	1215712	2.1	22	1220013	2.1	31	1229020	2.1	14
1215123	2.1	22	1215713	2.1	22	1220015	2.1	31	1229021	2.1	14
1215124	2.1	22	1215714	2.1	22	1220019	2.1	31	1229022	2.1	14
1215127	2.1	22	1215716	2.1	22	1220026	2.1	31	1229023	2.1	14
1215128	2.1	22	1215717	2.1	22	1223004	2.1	24	1229026	2.1	14
1215130	2.1	22	1215722	2.1	22	1223006	2.1	24	1229029	2.1	14
1215133	2.1	22	1215723	2.1	22	1223007	2.1	24	1229037	2.1	14
1215137	2.1	22	1215726	2.1	22	1223008	2.1	24	1229104	2.1	14
1215139	2.1	22	1215729	2.1	22	1223010	2.1	24	1229107	2.1	14
1215142	2.1	22	1215737	2.1	22	1223012	2.1	24	1229108	2.1	14
1215143	2.1	22	1215750	2.1	22	1223013	2.1	24	1229110	2.1	14
1215146	2.1	22	1215764	2.1	22	1223014	2.1	24	1229113	2.1	14
1215149	2.1	22	1215766	2.1	22	1223015	2.1	24	1229117	2.1	14
1215157	2.1	22	1215767	2.1	22	1223017	2.1	24	1229119	2.1	14
1215159	2.1	22	1215768	2.1	22	1223019	2.1	24	1229122	2.1	14
1215164	2.1	22	1215770	2.1	22	1223022	2.1	24	1229123	2.1	14
1215167	2.1	22	1215772	2.1	22	1223023	2.1	24	1229126	2.1	14
1215168	2.1	22	1215773	2.1	22	1223026	2.1	24	1229129	2.1	14
1215170	2.1	22	1215774	2.1	22	1223029	2.1	24	1229137	2.1	14
1215173	2.1	22	1215776	2.1	22	1223104	2.1	24	1229204	2.1	14
1215177	2.1	22	1215777	2.1	22	1223106	2.1	24	1229207	2.1	14
1215179	2.1	22	1215782	2.1	22	1223107	2.1	24	1229208	2.1	14
1215182	2.1	22	1215783	2.1	22	1223108	2.1	24	1229210	2.1	14
1215183	2.1	22	1215786	2.1	22	1223110	2.1	24	1229213	2.1	14
1215186	2.1	22	1215789	2.1	22	1223112	2.1	24	1229217	2.1	14
1215189	2.1	22	1215790	2.1	22	1223113	2.1	24	1229219	2.1	14
1215191	2.1	22	1215791	2.1	22	1223114	2.1	24	1229222	2.1	14
1215197	2.1	22	1215804	2.1	22	1223115	2.1	24	1229223	2.1	14
1215213	2.1	22	1215806	2.1	22	1223117	2.1	24	1229226	2.1	14
1215219	2.1	22	1215807	2.1	22	1223119	2.1	24	1229229	2.1	14
1215223	2.1	22	1215808	2.1	22	1223122	2.1	24	1229237	2.1	14
1215264	2.1	22	1215810	2.1	22	1223123	2.1	24	1229304	2.1	14
1215313	2.1	22	1215812	2.1	22	1223126	2.1	24	1229307	2.1	14
1215319	2.1	22	1215813	2.1	22	1223129	2.1	24	1229308	2.1	14
1215323	2.1	22	1215814	2.1	22	1223204	2.1	24	1229310	2.1	14
1215345	2.1	22	1215816	2.1	22	1223206	2.1	24	1229313	2.1	14
1215404	2.1	22	1215817	2.1	22	1223207	2.1	24	1229317	2.1	14
1215407	2.1	22	1215822	2.1	22	1223208	2.1	24	1229319	2.1	14
1215408	2.1	22	1215823	2.1	22	1223210	2.1	24	1229322	2.1	14
1215410	2.1	22	1215826	2.1	22	1223212	2.1	24	1229323	2.1	14
1215413	2.1	22	1215829	2.1	22	1223213	2.1	24	1229326	2.1	14
1215417	2.1	22	1215837	2.1	22	1223214	2.1	24	1229329	2.1	14
1215419	2.1	22	1215850	2.1	22	1223215	2.1	24	1229337	2.1	14
1215422	2.1	22	1215904	2.1	22	1223217	2.1	24	1229700	2.1	14
1215423	2.1	22	1215906	2.1	22	1223219	2.1	24	1229701	2.1	14
1215426	2.1	22	1215907	2.1	22	1223222	2.1	24	1229702	2.1	14
1215429	2.1	22	1215908	2.1	22	1223223	2.1	24	1229703	2.1	14
1215437	2.1	22	1215910	2.1	22	1223226	2.1	24	1229704	2.1	14
1215444	2.1	22	1215912	2.1	22	1223229	2.1	24	1229705	2.1	14
1215447	2.1	22	1215913	2.1	22	1223304	2.1	24	1229706	2.1	14
1215448	2.1	22	1215914	2.1	22	1223306	2.1	24	1229707	2.1	14
1215450	2.1	22	1215916	2.1	22	1223307	2.1	24	1229708	2.1	14
1215453	2.1	22	1215917	2.1	22	1223308	2.1	24	1229709	2.1	14
1215457	2.1	22	1215922	2.1	22	1223310	2.1	24	1229710	2.1	14
1215459	2.1	22	1215923	2.1	22	1223312	2.1	24	1229711	2.1	14
1215462	2.1	22	1215926	2.1	22	1223313	2.1	24	1232004	2.1	26
1215463	2.1	22	1215929	2.1	22	1223314	2.1	24	1232006	2.1	26

Broj artikla	poglavlje	stranica	Broj artikla	poglavlje	stranica	Broj artikla	poglavlje	stranica	Broj artikla	poglavlje	stranica
Art. no.	chapter	page	Art. no.	chapter	page	Art. no.	chapter	page	Art. no.	chapter	page
1232007	2.1	26	1250050	2.1	29	1270826	2.1	23	1291306	2.1	28
1232010	2.1	26	1250052	2.1	29	1270829	2.1	23	1291307	2.1	28
1232013	2.1	26	1250053	2.1	29	1270837	2.1	23	1291310	2.1	28
1232014	2.1	26	1250055	2.1	29	1275004	2.1	23	1291314	2.1	28
1232017	2.1	26	1250060	2.1	29	1275006	2.1	23	1291317	2.1	28
1232019	2.1	26	1250062	2.1	29	1275007	2.1	23	1291319	2.1	28
1232104	2.1	26	1250063	2.1	29	1275008	2.1	23	1291322	2.1	28
1232106	2.1	26	1250065	2.1	29	1275010	2.1	23	1291323	2.1	28
1232107	2.1	26	1253270	2.1	29	1275013	2.1	23	1291404	2.1	28
1232110	2.1	26	1253271	2.1	29	1275014	2.1	23	1291406	2.1	28
1232113	2.1	26	1253272	2.1	29	1275017	2.1	23	1291407	2.1	28
1232114	2.1	26	1253274	2.1	29	1275019	2.1	23	1291410	2.1	28
1232117	2.1	26	1253290	2.1	29	1275022	2.1	23	1291413	2.1	28
1232119	2.1	26	1253292	2.1	29	1275023	2.1	23	1291414	2.1	28
1232204	2.1	26	1253295	2.1	29	1275026	2.1	23	1291417	2.1	28
1232206	2.1	26	1253297	2.1	29	1275029	2.1	23	1291419	2.1	28
1232207	2.1	26	1253300	2.1	29	1275037	2.1	23	1291422	2.1	28
1232210	2.1	26	1253302	2.1	29	1275104	2.1	23	1291423	2.1	28
1232213	2.1	26	1253400	2.1	29	1275106	2.1	23	1291513	2.1	28
1232214	2.1	26	1253402	2.1	29	1275107	2.1	23	1291613	2.1	28
1232217	2.1	26	1253450	2.1	29	1275108	2.1	23	1291614	2.1	28
1232219	2.1	26	1253452	2.1	29	1275110	2.1	23	1291617	2.1	28
1232304	2.1	26	1253600	2.1	29	1275114	2.1	23	1293004	2.1	27
1232306	2.1	26	1253602	2.1	29	1275117	2.1	23	1293006	2.1	27
1232307	2.1	26	1253700	2.1	29	1275119	2.1	23	1293007	2.1	27
1232310	2.1	26	1253703	2.1	29	1275122	2.1	23	1293010	2.1	27
1232313	2.1	26	1253750	2.1	29	1275123	2.1	23	1293013	2.1	27
1232314	2.1	26	1253752	2.1	29	1275126	2.1	23	1293014	2.1	27
1232317	2.1	26	1270504	2.1	23	1275129	2.1	23	1293016	2.1	27
1232319	2.1	26	1270506	2.1	23	1275137	2.1	23	1293017	2.1	27
1240040	2.1	10	1270507	2.1	23	1275304	2.1	23	1293019	2.1	27
1240072	2.1	10	1270508	2.1	23	1275306	2.1	23	1293022	2.1	27
1240080	2.1	10	1270510	2.1	23	1275307	2.1	23	1293104	2.1	27
1240102	2.1	10	1270513	2.1	23	1275308	2.1	23	1293106	2.1	27
1240129	2.1	10	1270514	2.1	23	1275310	2.1	23	1293107	2.1	27
1240137	2.1	10	1270517	2.1	23	1275314	2.1	23	1293110	2.1	27
1240145	2.1	10	1270519	2.1	23	1275317	2.1	23	1293113	2.1	27
1240170	2.1	10	1270522	2.1	23	1275319	2.1	23	1293114	2.1	27
1240226	2.1	10	1270523	2.1	23	1275322	2.1	23	1293116	2.1	27
1240234	2.1	10	1270526	2.1	23	1275323	2.1	23	1293117	2.1	27
1240293	2.1	10	1270529	2.1	23	1275326	2.1	23	1293122	2.1	27
1240374	2.1	10	1270537	2.1	23	1275329	2.1	23	1296004	2.1	28
1240501	2.1	10	1270604	2.1	23	1275337	2.1	23	1296006	2.1	28
1240607	2.1	10	1270606	2.1	23	1275404	2.1	23	1296007	2.1	28
1240608	2.1	10	1270607	2.1	23	1275406	2.1	23	1296010	2.1	28
1240610	2.1	10	1270608	2.1	23	1275407	2.1	23	1296013	2.1	28
1240612	2.1	10	1270610	2.1	23	1275408	2.1	23	1296014	2.1	28
1240613	2.1	10	1270613	2.1	23	1275410	2.1	23	1296016	2.1	28
1240614	2.1	10	1270614	2.1	23	1275414	2.1	23	1296017	2.1	28
1240617	2.1	10	1270617	2.1	23	1275417	2.1	23	1296022	2.1	28
1240622	2.1	10	1270619	2.1	23	1275419	2.1	23	1296104	2.1	28
1240623	2.1	10	1270622	2.1	23	1275422	2.1	23	1296106	2.1	28
1240629	2.1	10	1270623	2.1	23	1275423	2.1	23	1296107	2.1	28
1240637	2.1	10	1270626	2.1	23	1275426	2.1	23	1296110	2.1	28
1240650	2.1	10	1270629	2.1	23	1275429	2.1	23	1296113	2.1	28
1245207	2.1	33	1270637	2.1	23	1275437	2.1	23	1296114	2.1	28
1245210	2.1	32	1270704	2.1	23	1290013	2.1	27	1296116	2.1	28
1245210	2.1	33	1270706	2.1	23	1290113	2.1	27	1296117	2.1	28
1245213	2.1	33	1270707	2.1	23	1291004	2.1	28	1296122	2.1	28
1245216	2.1	33	1270708	2.1	23	1291006	2.1	28	1601075	2.2	59
1245217	2.1	33	1270710	2.1	23	1291007	2.1	28	1601105	2.2	59
1245222	2.1	33	1270713	2.1	23	1291010	2.1	28	1601130	2.2	59
1245223	2.1	33	1270714	2.1	23	1291013	2.1	28	1601156	2.2	59
1245226	2.1	33	1270717	2.1	23	1291014	2.1	28	1601172	2.2	59
1245229	2.1	33	1270719	2.1	23	1291017	2.1	28	1601229	2.2	59
1245237	2.1	33	1270722	2.1	23	1291019	2.1	28	1601296	2.2	59
1245250	2.1	33	1270723	2.1	23	1291022	2.1	28	1601385	2.2	59
1245270	2.1	33	1270726	2.1	23	1291023	2.1	28	1601458	2.2	59
1245307	2.1	33	1270729	2.1	23	1291029	2.1	28	1601490	2.2	59
1245310	2.1	32	1270737	2.1	23	1291104	2.1	28	1601600	2.2	59
1245310	2.1	33	1270804	2.1	23	1291106	2.1	28	1601601	2.2	59
1245313	2.1	33	1270806	2.1	23	1291107	2.1	28	1601602	2.2	59
1245316	2.1	33	1270807	2.1	23	1291110	2.1	28	1601603	2.2	59
1245317	2.1	33	1270808	2.1	23	1291113	2.1	28	1601604	2.2	59
1245322	2.1	33	1270810	2.1	23	1291114	2.1	28	1601605	2.2	59
1245323	2.1	33	1270813	2.1	23	1291117	2.1	28	1601606	2.2	59
1245326	2.1	33	1270814	2.1	23	1291119	2.1	28	1601607	2.2	59
1245329	2.1	33	1270817	2.1	23	1291122	2.1	28	1601608	2.2	59
1245337	2.1	33	1270819	2.1	23	1291123	2.1	28	1601609	2.2	59
1245350	2.1	33	1270822	2.1	23	1291129	2.1	28	1602063	2.2	58
1245370	2.1	33	1270823	2.1	23	1291304	2.1	28	1602098	2.2	58

Broj artikla Art. no.	poglavlje chapter	stranica page	Broj artikla Art. no.	poglavlje chapter	stranica page	Broj artikla Art. no.	poglavlje chapter	stranica page	Broj artikla Art. no.	poglavlje chapter	stranica page
1602128	2.2	58	1902606	2.2	53	1926003	2.1	21	1926637	2.1	11
1602144	2.2	58	1902607	2.2	53	1926004	2.1	21	1926650	2.1	11
1602152	2.2	58	1902608	2.2	53	1926006	2.1	21	1926653	2.1	11
1602209	2.2	58	1902609	2.2	53	1926007	2.1	21	1926654	2.1	11
1602276	2.2	58	1902610	2.2	53	1926008	2.1	21	1926656	2.1	11
1602357	2.2	58	1902611	2.2	53	1926023	2.1	21	1926657	2.1	11
1602446	2.2	58	1902612	2.2	53	1926029	2.1	21	1926658	2.1	11
1602600	2.2	58	1902613	2.2	53	1926033	2.1	21	1926660	2.1	11
1602601	2.2	58	1902614	2.2	53	1926039	2.1	21	1926662	2.1	11
1602602	2.2	58	1902615	2.2	53	1926043	2.1	21	1926663	2.1	11
1602603	2.2	58	1902616	2.2	53	1926049	2.1	11	1926664	2.1	11
1602604	2.2	58	1902617	2.2	53	1926053	2.1	11	1926666	2.1	11
1602605	2.2	58	1902618	2.2	53	1926059	2.1	11	1926667	2.1	11
1602606	2.2	58	1902619	2.2	53	1926063	2.1	11	1926669	2.1	11
1602607	2.2	58	1902622	2.2	53	1926073	2.1	11	1926672	2.1	11
1602608	2.2	58	1902628	2.2	53	1926083	2.1	11	1926673	2.1	11
1603600	2.2	60	1902630	2.2	53	1926093	2.1	11	1926676	2.1	11
1603601	2.2	60	1919805	2.1	9	1926098	2.1	21	1926679	2.1	11
1603602	2.2	60	1919806	2.1	9	1926100	2.1	21	1926687	2.1	11
1603603	2.2	60	1919807	2.1	9	1926120	2.1	21	1926690	2.1	11
1603604	2.2	60	1919814	2.1	9	1926130	2.1	21	1927004	2.1	21
1603605	2.2	60	1919815	2.1	9	1926133	2.1	21	1927006	2.1	21
1603606	2.2	60	1919816	2.1	9	1926140	2.1	21	1927008	2.1	21
1603607	2.2	60	1919822	2.1	9	1926157	2.1	21	1927110	2.1	21
1603608	2.2	60	1919830	2.1	9	1926159	2.1	21	1927115	2.1	21
1603609	2.2	60	1919849	2.1	9	1926160	2.1	21	1927119	2.1	21
1603620	2.2	60	1919850	2.1	9	1926166	2.1	21	1927126	2.1	21
1603621	2.2	60	1919857	2.1	9	1926167	2.1	21	1927134	2.1	21
1603622	2.2	60	1919865	2.1	9	1926168	2.1	21	1927304	2.1	21
1603623	2.2	60	1919873	2.1	9	1926169	2.1	21	1927306	2.1	21
1603624	2.2	60	1919890	2.1	9	1926170	2.1	21	1927308	2.1	21
1603625	2.2	60	1919899	2.1	9	1926174	2.1	21	1927311	2.1	21
1603626	2.2	60	1919902	2.1	9	1926177	2.1	21	1927315	2.1	21
1603627	2.2	60	1919903	2.1	9	1926178	2.1	21	1927319	2.1	21
1603628	2.2	60	1919911	2.1	9	1926179	2.1	21	1927326	2.1	21
1603629	2.2	60	1919912	2.1	9	1926180	2.1	21	1927334	2.1	21
1800206	2.2	91	1919913	2.1	9	1926181	2.1	21	1927904	2.1	11
1800208	2.2	91	1919920	2.1	9	1926182	2.1	21	1927906	2.1	11
1800210	2.2	91	1919925	2.1	9	1926190	2.1	21	1927908	2.1	11
1800212	2.2	91	1919938	2.1	9	1926220	2.1	21	1927911	2.1	11
1800215	2.2	91	1919946	2.1	9	1926223	2.1	21	1927915	2.1	11
1800219	2.2	91	1919947	2.1	9	1926225	2.1	21	1927919	2.1	11
1800224	2.2	91	1919954	2.1	9	1926226	2.1	21	1927926	2.1	11
1800256	2.2	91	1919962	2.1	9	1926229	2.1	21	1927934	2.1	11
1800258	2.2	91	1919970	2.1	9	1926237	2.1	21	1927964	2.1	11
1800260	2.2	91	1922007	2.1	35	1926250	2.1	21	1927966	2.1	11
1800262	2.2	91	1922010	2.1	35	1926251	2.1	21	1927968	2.1	11
1800265	2.2	91	1922013	2.1	35	1926303	2.1	21	1927971	2.1	11
1800269	2.2	91	1922016	2.1	35	1926304	2.1	21	1927975	2.1	11
1800274	2.2	91	1922017	2.1	35	1926306	2.1	21	1927979	2.1	11
1880003	2.4	112	1922022	2.1	35	1926307	2.1	21	1927986	2.1	11
1880005	2.4	112	1922023	2.1	35	1926308	2.1	21	1927994	2.1	11
1880007	2.4	112	1922026	2.1	35	1926310	2.1	21	1929004	2.1	19
1880010	2.4	112	1922029	2.1	35	1926312	2.1	21	1929006	2.1	19
1880012	2.4	112	1922037	2.1	35	1926313	2.1	21	1929008	2.1	19
1880014	2.4	112	1922050	2.1	35	1926314	2.1	21	1929011	2.1	19
1880016	2.4	112	1922070	2.1	35	1926316	2.1	21	1929015	2.1	19
1880018	2.4	112	1922307	2.1	36	1926317	2.1	21	1929019	2.1	19
1880020	2.4	112	1922310	2.1	36	1926319	2.1	21	1929026	2.1	19
1881500	2.4	112	1922313	2.1	36	1926322	2.1	21	1929034	2.1	19
1882003	2.4	112	1922316	2.1	36	1926323	2.1	21	1929104	2.1	19
1882005	2.4	112	1922317	2.1	36	1926326	2.1	21	1929106	2.1	19
1882007	2.4	112	1922322	2.1	36	1926329	2.1	21	1929108	2.1	19
1882010	2.4	112	1922323	2.1	36	1926337	2.1	21	1929111	2.1	19
1882012	2.4	112	1922326	2.1	36	1926350	2.1	21	1929115	2.1	19
1882014	2.4	112	1922329	2.1	36	1926603	2.1	11	1929119	2.1	19
1882016	2.4	112	1922337	2.1	36	1926604	2.1	11	1929126	2.1	19
1882018	2.4	112	1922350	2.1	36	1926606	2.1	11	1929134	2.1	19
1882020	2.4	112	1922370	2.1	36	1926607	2.1	11	1929304	2.1	19
1892900	2.4	115	1922407	2.1	35	1926608	2.1	11	1929306	2.1	19
1892901	2.4	115	1922410	2.1	35	1926610	2.1	11	1929308	2.1	19
1894005	2.4	113	1922413	2.1	35	1926612	2.1	11	1929311	2.1	19
1894007	2.4	113	1922416	2.1	35	1926613	2.1	11	1929315	2.1	19
1894010	2.4	113	1922417	2.1	35	1926614	2.1	11	1929319	2.1	19
1894014	2.4	113	1922422	2.1	35	1926616	2.1	11	1929326	2.1	19
1902600	2.2	53	1922423	2.1	35	1926617	2.1	11	1929334	2.1	19
1902601	2.2	53	1922426	2.1	35	1926619	2.1	11	1929404	2.1	19
1902602	2.2	53	1922429	2.1	35	1926622	2.1	11	1929406	2.1	19
1902603	2.2	53	1922437	2.1	35	1926623	2.1	11	1929408	2.1	19
1902604	2.2	53	1922450	2.1	35	1926626	2.1	11	1929411	2.1	19
1902605	2.2	53	1922470	2.1	36	1926629	2.1	11	1929415	2.1	19

Broj artikla	poglavlje	stranica	Broj artikla	poglavlje	stranica	Broj artikla	poglavlje	stranica	Broj artikla	poglavlje	stranica
Art. no.	chapter	page	Art. no.	chapter	page	Art. no.	chapter	page	Art. no.	chapter	page
1929419	2.1	19	1930253	2.1	19	1930863	2.1	12	1949326	2.1	21
1929426	2.1	19	1930263	2.1	19	1930864	2.1	12	1949329	2.1	21
1929434	2.1	19	1930303	2.1	19	1930866	2.1	12	1949337	2.1	21
1929604	2.1	12	1930304	2.1	19	1930867	2.1	12	1949344	2.1	21
1929606	2.1	12	1930306	2.1	19	1930869	2.1	12	1949347	2.1	21
1929608	2.1	12	1930307	2.1	19	1930872	2.1	12	1949348	2.1	21
1929611	2.1	12	1930308	2.1	19	1930873	2.1	12	1949350	2.1	21
1929615	2.1	12	1930310	2.1	19	1930876	2.1	12	1949353	2.1	21
1929619	2.1	12	1930312	2.1	19	1930879	2.1	12	1949357	2.1	21
1929626	2.1	12	1930313	2.1	19	1930887	2.1	12	1949359	2.1	21
1929634	2.1	12	1930314	2.1	19	1930890	2.1	12	1949362	2.1	21
1929653	2.1	12	1930316	2.1	19	1930903	2.1	12	1949363	2.1	21
1929654	2.1	12	1930317	2.1	19	1930904	2.1	12	1949366	2.1	21
1929656	2.1	12	1930319	2.1	19	1930906	2.1	12	1949369	2.1	21
1929658	2.1	12	1930322	2.1	19	1930907	2.1	12	1949377	2.1	21
1929661	2.1	12	1930323	2.1	19	1930908	2.1	12	1949404	2.1	21
1929665	2.1	12	1930326	2.1	19	1930910	2.1	12	1949407	2.1	21
1929669	2.1	12	1930329	2.1	19	1930912	2.1	12	1949408	2.1	21
1929676	2.1	12	1930337	2.1	19	1930913	2.1	12	1949410	2.1	21
1929684	2.1	12	1930339	2.1	19	1930914	2.1	12	1949413	2.1	21
1929703	2.1	12	1930350	2.1	19	1930916	2.1	12	1949417	2.1	21
1929704	2.1	12	1930403	2.1	19	1930917	2.1	12	1949419	2.1	21
1929706	2.1	12	1930404	2.1	19	1930919	2.1	12	1949422	2.1	21
1929708	2.1	12	1930406	2.1	19	1930922	2.1	12	1949423	2.1	21
1929711	2.1	12	1930407	2.1	19	1930923	2.1	12	1949426	2.1	21
1929715	2.1	12	1930408	2.1	19	1930926	2.1	12	1949429	2.1	21
1929719	2.1	12	1930410	2.1	19	1930929	2.1	12	1949437	2.1	21
1929726	2.1	12	1930412	2.1	19	1930937	2.1	12	1950003	2.1	21
1929734	2.1	12	1930413	2.1	19	1930950	2.1	12	1950004	2.1	21
1929754	2.1	12	1930414	2.1	19	1939043	2.1	12	1950006	2.1	21
1929756	2.1	12	1930416	2.1	19	1939053	2.1	12	1950007	2.1	21
1929758	2.1	12	1930417	2.1	19	1939059	2.1	12	1950008	2.1	21
1929761	2.1	12	1930419	2.1	19	1939063	2.1	12	1950010	2.1	21
1929765	2.1	12	1930422	2.1	19	1939069	2.1	12	1950012	2.1	21
1929766	2.1	12	1930423	2.1	19	1939073	2.1	12	1950013	2.1	21
1929769	2.1	12	1930426	2.1	19	1939143	2.1	12	1950014	2.1	21
1929774	2.1	12	1930429	2.1	19	1939149	2.1	12	1950016	2.1	21
1930003	2.1	19	1930437	2.1	19	1939153	2.1	12	1950017	2.1	21
1930004	2.1	19	1930439	2.1	19	1939159	2.1	12	1950019	2.1	21
1930006	2.1	19	1930450	2.1	19	1939163	2.1	12	1950022	2.1	21
1930007	2.1	19	1930503	2.1	12	1939173	2.1	12	1950023	2.1	21
1930008	2.1	19	1930504	2.1	12	1940008	2.1	31	1950026	2.1	21
1930010	2.1	19	1930506	2.1	12	1940011	2.1	31	1950029	2.1	21
1930012	2.1	19	1930507	2.1	12	1940013	2.1	31	1950037	2.1	21
1930013	2.1	19	1930508	2.1	12	1940015	2.1	31	1950050	2.1	21
1930014	2.1	19	1930510	2.1	12	1940019	2.1	31	1950053	2.1	21
1930016	2.1	19	1930512	2.1	12	1940026	2.1	31	1950054	2.1	21
1930017	2.1	19	1930513	2.1	12	1948301	2.1	31	1950055	2.1	21
1930019	2.1	19	1930514	2.1	12	1949004	2.1	21	1950056	2.1	21
1930022	2.1	19	1930516	2.1	12	1949007	2.1	21	1950057	2.1	21
1930023	2.1	19	1930517	2.1	12	1949008	2.1	21	1950058	2.1	21
1930026	2.1	19	1930519	2.1	12	1949010	2.1	21	1950059	2.1	21
1930029	2.1	19	1930522	2.1	12	1949013	2.1	21	1950060	2.1	21
1930037	2.1	19	1930523	2.1	12	1949017	2.1	21	1950061	2.1	21
1930050	2.1	19	1930526	2.1	12	1949019	2.1	21	1950062	2.1	21
1930103	2.1	19	1930529	2.1	12	1949022	2.1	21	1950063	2.1	21
1930104	2.1	19	1930537	2.1	12	1949023	2.1	21	1950064	2.1	21
1930106	2.1	19	1930550	2.1	12	1949026	2.1	21	1950065	2.1	21
1930107	2.1	19	1930804	2.1	12	1949029	2.1	21	1950066	2.1	21
1930108	2.1	19	1930806	2.1	12	1949038	2.1	21	1950067	2.1	21
1930110	2.1	19	1930807	2.1	12	1949204	2.1	21	1950068	2.1	21
1930112	2.1	19	1930808	2.1	12	1949207	2.1	21	1950069	2.1	21
1930113	2.1	19	1930810	2.1	12	1949208	2.1	21	1950070	2.1	21
1930114	2.1	19	1930812	2.1	12	1949210	2.1	21	1950104	2.1	21
1930116	2.1	19	1930813	2.1	12	1949213	2.1	21	1950106	2.1	21
1930117	2.1	19	1930814	2.1	12	1949217	2.1	21	1950108	2.1	21
1930119	2.1	19	1930816	2.1	12	1949219	2.1	21	1950111	2.1	21
1930122	2.1	19	1930817	2.1	12	1949222	2.1	21	1950115	2.1	21
1930123	2.1	19	1930819	2.1	12	1949223	2.1	21	1950119	2.1	21
1930126	2.1	19	1930822	2.1	12	1949226	2.1	21	1950126	2.1	21
1930129	2.1	19	1930823	2.1	12	1949229	2.1	21	1950134	2.1	21
1930133	2.1	19	1930826	2.1	12	1949237	2.1	21	1950704	2.1	21
1930137	2.1	19	1930829	2.1	12	1949304	2.1	21	1950706	2.1	21
1930139	2.1	19	1930837	2.1	12	1949307	2.1	21	1950708	2.1	21
1930143	2.1	19	1930850	2.1	12	1949308	2.1	21	1950711	2.1	21
1930150	2.1	19	1930854	2.1	12	1949310	2.1	21	1950715	2.1	21
1930153	2.1	19	1930856	2.1	12	1949313	2.1	21	1950719	2.1	21
1930163	2.1	19	1930857	2.1	12	1949317	2.1	21	1950726	2.1	21
1930233	2.1	19	1930858	2.1	12	1949319	2.1	21	1950734	2.1	21
1930239	2.1	19	1930860	2.1	12	1949322	2.1	21	1951003	2.1	11
1930243	2.1	19	1930862	2.1	12	1949323	2.1	21	1951004	2.1	11

Broj artikla Art. no.	poglavlje chapter	stranica page	Broj artikla Art. no.	poglavlje chapter	stranica page	Broj artikla Art. no.	poglavlje chapter	stranica page	Broj artikla Art. no.	poglavlje chapter	stranica page
1951006	2.1	11	1951703	2.1	11	1967747	2.1	20	1997160	2.1	20
1951007	2.1	11	1951706	2.1	11	1967748	2.1	20	1997163	2.1	20
1951008	2.1	11	1951709	2.1	11	1967750	2.1	20	1997165	2.1	20
1951010	2.1	11	1951717	2.1	11	1967753	2.1	20	1997169	2.1	20
1951012	2.1	11	1951724	2.1	11	1967757	2.1	20	1997172	2.1	20
1951013	2.1	11	1951727	2.1	11	1967759	2.1	20	1997175	2.1	20
1951014	2.1	11	1951728	2.1	11	1967762	2.1	20	1997178	2.1	20
1951016	2.1	11	1951730	2.1	11	1967763	2.1	20	1997205	2.1	20
1951017	2.1	11	1951733	2.1	11	1967766	2.1	20	1997207	2.1	20
1951019	2.1	11	1951737	2.1	11	1967769	2.1	20	1997210	2.1	20
1951022	2.1	11	1951739	2.1	11	1967777	2.1	20	1997213	2.1	20
1951023	2.1	11	1951742	2.1	11	1967844	2.1	20	1997215	2.1	20
1951026	2.1	11	1951743	2.1	11	1967847	2.1	20	1997219	2.1	20
1951029	2.1	11	1951746	2.1	11	1967848	2.1	20	1997222	2.1	20
1951037	2.1	11	1951749	2.1	11	1967850	2.1	20	1997225	2.1	20
1951050	2.1	11	1951757	2.1	11	1967853	2.1	20	1997228	2.1	20
1951104	2.1	11	1952004	2.1	12	1967857	2.1	20	2000075	2.2	64
1951106	2.1	11	1952007	2.1	12	1967859	2.1	20	2000091	2.2	64
1951108	2.1	11	1952008	2.1	12	1967862	2.1	20	2000113	2.2	64
1951111	2.1	11	1952010	2.1	12	1967863	2.1	20	2000130	2.2	64
1951115	2.1	11	1952013	2.1	12	1967866	2.1	20	2000164	2.2	64
1951119	2.1	11	1952017	2.1	12	1967869	2.1	20	2000210	2.2	64
1951126	2.1	11	1952019	2.1	12	1967877	2.1	20	2000296	2.2	64
1951134	2.1	11	1952022	2.1	12	1967904	2.1	20	2000369	2.2	64
1951139	2.1	11	1952023	2.1	12	1967907	2.1	20	2000423	2.2	64
1951140	2.1	11	1952026	2.1	12	1967908	2.1	20	2000482	2.2	64
1951141	2.1	11	1952029	2.1	12	1967910	2.1	20	2001071	2.2	64
1951142	2.1	11	1952037	2.1	12	1967913	2.1	20	2001098	2.2	64
1951143	2.1	11	1952104	2.1	12	1967917	2.1	20	2001110	2.2	64
1951144	2.1	11	1952107	2.1	12	1967919	2.1	20	2001136	2.2	64
1951145	2.1	11	1952108	2.1	12	1967922	2.1	20	2001160	2.2	64
1951146	2.1	11	1952110	2.1	12	1967923	2.1	20	2001217	2.2	64
1951147	2.1	11	1952113	2.1	12	1967926	2.1	20	2001292	2.2	64
1951148	2.1	11	1952117	2.1	12	1967929	2.1	20	2001365	2.2	64
1951149	2.1	11	1952119	2.1	12	1967937	2.1	20	2001420	2.2	64
1951150	2.1	11	1952122	2.1	12	1967944	2.1	20	2001489	2.2	64
1951151	2.1	11	1952123	2.1	12	1967947	2.1	20	2002078	2.2	64
1951152	2.1	11	1952126	2.1	12	1967948	2.1	20	2002094	2.2	64
1951153	2.1	11	1952129	2.1	12	1967950	2.1	20	2002116	2.2	64
1951154	2.1	11	1952137	2.1	12	1967953	2.1	20	2002132	2.2	64
1951155	2.1	11	1952204	2.1	12	1967957	2.1	20	2002167	2.2	64
1951156	2.1	11	1952207	2.1	12	1967959	2.1	20	2002213	2.2	64
1951160	2.1	11	1952208	2.1	12	1967962	2.1	20	2002299	2.2	64
1951161	2.1	11	1952210	2.1	12	1967963	2.1	20	2002361	2.2	64
1951164	2.1	11	1952213	2.1	12	1967966	2.1	20	2002426	2.2	64
1951165	2.1	11	1952217	2.1	12	1967969	2.1	20	2002485	2.2	64
1951167	2.1	11	1952219	2.1	12	1967977	2.1	20	2003074	2.2	64
1951168	2.1	11	1952222	2.1	12	1974004	2.1	30	2003090	2.2	64
1951172	2.1	11	1952223	2.1	12	1974007	2.1	30	2003112	2.2	64
1951604	2.1	11	1952226	2.1	12	1974008	2.1	30	2003139	2.2	64
1951607	2.1	11	1952229	2.1	12	1974010	2.1	30	2003163	2.2	64
1951608	2.1	11	1952237	2.1	12	1974013	2.1	30	2003210	2.2	64
1951610	2.1	11	1952304	2.1	12	1974014	2.1	30	2003295	2.2	64
1951613	2.1	11	1952307	2.1	12	1974017	2.1	30	2003368	2.2	64
1951617	2.1	11	1952308	2.1	12	1974018	2.1	30	2003422	2.2	64
1951619	2.1	11	1952310	2.1	12	1974020	2.1	30	2003481	2.2	64
1951622	2.1	11	1952313	2.1	12	1974023	2.1	30	2004070	2.2	68
1951623	2.1	11	1952317	2.1	12	1974029	2.1	30	2004097	2.2	68
1951626	2.1	11	1952319	2.1	12	1974037	2.1	30	2004119	2.2	68
1951629	2.1	11	1952322	2.1	12	1974039	2.1	30	2004135	2.2	68
1951637	2.1	11	1952323	2.1	12	1974047	2.1	30	2004160	2.2	68
1951644	2.1	11	1952326	2.1	12	1997005	2.1	20	2004216	2.2	68
1951647	2.1	11	1952329	2.1	12	1997007	2.1	20	2004291	2.2	68
1951648	2.1	11	1952337	2.1	12	1997010	2.1	20	2004364	2.2	68
1951650	2.1	11	1955011	2.1	31	1997013	2.1	20	2004429	2.2	68
1951653	2.1	11	1955015	2.1	31	1997015	2.1	20	2004488	2.2	68
1951657	2.1	11	1955019	2.1	31	1997019	2.1	20	2005077	2.2	68
1951659	2.1	11	1955026	2.1	31	1997022	2.1	20	2005093	2.2	68
1951662	2.1	11	1960000	2.1	30	1997025	2.1	20	2005115	2.2	68
1951663	2.1	11	1960001	2.1	30	1997028	2.1	20	2005131	2.2	68
1951666	2.1	11	1960002	2.1	30	1997105	2.1	20	2005166	2.2	68
1951669	2.1	11	1960003	2.1	30	1997107	2.1	20	2005212	2.2	68
1951677	2.1	11	1960004	2.1	30	1997110	2.1	20	2005298	2.2	68
1951684	2.1	11	1960005	2.1	30	1997113	2.1	20	2005360	2.2	68
1951687	2.1	11	1960007	2.1	30	1997115	2.1	20	2005425	2.2	68
1951688	2.1	11	1960008	2.1	30	1997119	2.1	20	2005484	2.2	68
1951690	2.1	11	1960010	2.1	30	1997122	2.1	20	2006073	2.2	68
1951693	2.1	11	1960013	2.1	30	1997125	2.1	20	2006090	2.2	68
1951697	2.1	11	1960017	2.1	30	1997128	2.1	20	2006111	2.2	68
1951699	2.1	11	1960019	2.1	30	1997155	2.1	20	2006138	2.2	68
1951702	2.1	11	1967744	2.1	20	1997157	2.1	20	2006162	2.2	68

Broj artikla	poglavlje	stranica	Broj artikla	poglavlje	stranica	Broj artikla	poglavlje	stranica	Broj artikla	poglavlje	stranica
Art. no.	chapter	page	Art. no.	chapter	page	Art. no.	chapter	page	Art. no.	chapter	page
2006219	2.2	68	2013428	2.2	75	2036134	2.2	73	2512150	2.2	46
2006294	2.2	68	2013487	2.2	75	2036142	2.2	73	2512156	2.2	46
2006367	2.2	68	2014076	2.2	75	2036150	2.2	73	2609470	2.2	89
2006421	2.2	68	2014092	2.2	75	2036169	2.2	73	2609471	2.2	89
2006480	2.2	68	2014114	2.2	75	2036177	2.2	73	2609473	2.2	89
2007070	2.2	68	2014130	2.2	75	2036185	2.2	73	2609476	2.2	89
2007096	2.2	68	2014165	2.2	75	2037017	2.2	73	2609481	2.2	89
2007118	2.2	68	2014211	2.2	75	2037025	2.2	73	2609489	2.2	89
2007134	2.2	68	2014297	2.2	75	2037033	2.2	73	2609490	2.2	89
2007169	2.2	68	2014360	2.2	75	2037041	2.2	73	2609492	2.2	89
2007215	2.2	68	2014424	2.2	75	2037050	2.2	73	2609498	2.2	89
2007290	2.2	68	2014483	2.2	75	2037068	2.2	73	2609507	2.2	87
2007363	2.2	68	2015072	2.2	75	2037076	2.2	73	2609509	2.2	87
2007428	2.2	68	2015099	2.2	75	2037084	2.2	73	2609511	2.2	87
2007487	2.2	68	2015110	2.2	75	2037092	2.2	73	2609513	2.2	87
2008076	2.2	72	2015137	2.2	75	2037106	2.2	73	2609516	2.2	87
2008092	2.2	72	2015161	2.2	75	2037114	2.2	73	2609521	2.2	87
2008114	2.2	72	2015218	2.2	75	2037122	2.2	73	2609529	2.2	87
2008130	2.2	72	2015293	2.2	75	2037130	2.2	73	2609536	2.2	87
2008165	2.2	72	2015366	2.2	75	2037149	2.2	73	2609542	2.2	87
2008211	2.2	72	2015420	2.2	75	2037157	2.2	73	2609548	2.2	87
2008297	2.2	72	2015480	2.2	75	2037165	2.2	73	2609570	2.2	88
2008360	2.2	72	2015516	2.2	76	2037173	2.2	73	2609571	2.2	88
2008424	2.2	72	2015517	2.2	76	2037181	2.2	73	2609573	2.2	88
2008483	2.2	72	2015520	2.2	76	2051010	2.2	65	2609576	2.2	88
2009072	2.2	72	2015521	2.2	76	2051028	2.2	65	2609581	2.2	88
2009099	2.2	72	2015525	2.2	76	2051036	2.2	65	2609589	2.2	88
2009110	2.2	72	2015532	2.2	76	2051044	2.2	65	2609590	2.2	88
2009137	2.2	72	2015540	2.2	76	2051052	2.2	65	2609592	2.2	88
2009161	2.2	72	2015550	2.2	76	2051060	2.2	65	2609598	2.2	88
2009218	2.2	72	2015563	2.2	76	2051079	2.2	65	2609612	2.2	87
2009293	2.2	72	2034018	2.2	69	2051087	2.2	65	2609615	2.2	87
2009366	2.2	72	2034026	2.2	69	2051095	2.2	65	2609616	2.2	87
2009420	2.2	72	2034034	2.2	69	2051117	2.2	65	2609617	2.2	87
2009480	2.2	72	2034042	2.2	69	2051125	2.2	65	2609620	2.2	87
2010070	2.2	72	2034050	2.2	69	2051133	2.2	65	2609625	2.2	87
2010097	2.2	72	2034069	2.2	69	2051141	2.2	65	2609632	2.2	87
2010119	2.2	72	2034077	2.2	69	2051150	2.2	65	2609640	2.2	87
2010135	2.2	72	2034085	2.2	69	2051168	2.2	65	2609650	2.2	87
2010160	2.2	72	2034093	2.2	69	2051176	2.2	65	2609663	2.2	87
2010216	2.2	72	2034115	2.2	69	2051184	2.2	65	2609664	2.2	87
2010291	2.2	72	2034123	2.2	69	2051192	2.2	65	2609689	2.2	89
2010364	2.2	72	2034130	2.2	69	2052016	2.2	65	2609691	2.2	89
2010429	2.2	72	2034131	2.2	69	2052024	2.2	65	2609692	2.2	89
2010488	2.2	72	2034140	2.2	69	2052032	2.2	65	2609693	2.2	89
2011077	2.2	72	2034158	2.2	69	2052040	2.2	65	2609694	2.2	89
2011093	2.2	72	2034166	2.2	69	2052059	2.2	65	2609695	2.2	89
2011115	2.2	72	2034174	2.2	69	2052067	2.2	65	2609696	2.2	89
2011131	2.2	72	2034182	2.2	69	2052070	2.2	65	2609710	2.2	88
2011166	2.2	72	2034190	2.2	69	2052075	2.2	65	2609711	2.2	88
2011212	2.2	72	2035006	2.2	69	2052083	2.2	65	2609713	2.2	88
2011298	2.2	72	2035014	2.2	69	2052091	2.2	65	2609716	2.2	88
2011360	2.2	72	2035022	2.2	69	2052113	2.2	65	2609721	2.2	88
2011425	2.2	72	2035030	2.2	69	2052121	2.2	65	2609729	2.2	88
2011484	2.2	72	2035049	2.2	69	2052130	2.2	65	2609736	2.2	88
2012073	2.2	75	2035057	2.2	69	2052148	2.2	65	2609742	2.2	88
2012090	2.2	75	2035065	2.2	69	2052156	2.2	65	2609748	2.2	88
2012111	2.2	75	2035073	2.2	69	2052164	2.2	65	2609775	2.2	89
2012138	2.2	75	2035081	2.2	69	2052172	2.2	65	2609776	2.2	89
2012162	2.2	75	2035090	2.2	69	2052180	2.2	65	2609777	2.2	89
2012219	2.2	75	2035103	2.2	69	2052199	2.2	65	2609780	2.2	89
2012294	2.2	75	2035111	2.2	69	2200090	2.2	57	2609784	2.2	89
2012367	2.2	75	2035120	2.2	69	2200112	2.2	57	2609788	2.2	89
2012421	2.2	75	2035138	2.2	69	2200139	2.2	57	2609795	2.2	89
2012480	2.2	75	2035154	2.2	69	2200163	2.2	57	2609815	2.2	88
2012516	2.2	76	2035162	2.2	69	2200210	2.2	57	2609816	2.2	88
2012517	2.2	76	2035170	2.2	69	2200295	2.2	57	2609817	2.2	88
2012520	2.2	76	2035189	2.2	69	2200368	2.2	57	2609820	2.2	88
2012521	2.2	76	2035197	2.2	69	2200516	2.2	57	2609825	2.2	88
2012525	2.2	76	2036010	2.2	73	2200520	2.2	57	2609832	2.2	88
2012540	2.2	76	2036029	2.2	73	2200521	2.2	57	2609840	2.2	88
2012550	2.2	76	2036037	2.2	73	2200525	2.2	57	2609850	2.2	88
2012563	2.2	76	2036045	2.2	73	2200532	2.2	57	2609863	2.2	88
2013070	2.2	75	2036053	2.2	73	2200540	2.2	57	2609879	2.2	89
2013096	2.2	75	2036061	2.2	73	2512112	2.2	46	2609880	2.2	89
2013118	2.2	75	2036070	2.2	73	2512116	2.2	46	2609882	2.2	89
2013134	2.2	75	2036088	2.2	73	2512120	2.2	46	2609885	2.2	89
2013169	2.2	75	2036096	2.2	73	2512121	2.2	46	2609892	2.2	89
2013215	2.2	75	2036100	2.2	73	2512125	2.2	46	2609894	2.2	89
2013290	2.2	75	2036118	2.2	73	2512132	2.2	46	2609895	2.2	89
2013363	2.2	75	2036126	2.2	73	2512140	2.2	46	2609899	2.2	89

Broj artikla Art. no.	poglavlje chapter	stranica page	Broj artikla Art. no.	poglavlje chapter	stranica page	Broj artikla Art. no.	poglavlje chapter	stranica page	Broj artikla Art. no.	poglavlje chapter	stranica page
2609915	2.2	88	3000508	2.2	47	3407609	2.2	61	3805206	2.2	41
2609916	2.2	88	3000516	2.2	47	3407611	2.2	61	3805207	2.2	41
2609917	2.2	88	3000524	2.2	47	3407613	2.2	61	3805211	2.2	41
2609920	2.2	88	3000605	2.2	47	3407616	2.2	61	3805212	2.2	41
2609925	2.2	88	3000613	2.2	47	3407621	2.2	61	3805213	2.2	41
2609932	2.2	88	3000621	2.2	47	3407629	2.2	61	3805214	2.2	41
2609940	2.2	88	3000702	2.2	47	3407636	2.2	61	3805217	2.2	41
2609950	2.2	88	3000800	2.2	47	3407642	2.2	61	3805218	2.2	41
2609951	2.2	88	3003160	2.2	48	3407648	2.2	61	3805219	2.2	41
2609974	2.2	86	3003162	2.2	48	3407707	2.2	62	3805223	2.2	41
2609977	2.2	70	3003163	2.2	48	3407709	2.2	62	3805224	2.2	41
2609978	2.2	70	3003164	2.2	48	3407711	2.2	62	3805225	2.2	41
2609979	2.2	70	3003165	2.2	48	3407713	2.2	62	3805229	2.2	41
2609980	2.2	70	3003167	2.2	48	3407716	2.2	62	3805230	2.2	41
2609981	2.2	70	3003210	2.2	48	3407721	2.2	62	3805231	2.2	41
2609982	2.2	70	3003211	2.2	48	3407729	2.2	62	3805235	2.2	41
2609983	2.2	70	3003212	2.2	48	3407736	2.2	62	3805236	2.2	41
2609984	2.2	70	3003213	2.2	48	3407742	2.2	62	3805237	2.2	41
2609985	2.2	70	3003214	2.2	48	3407748	2.2	62	3805300	2.2	41
2609986	2.2	70	3003224	2.2	48	3805000	2.2	40	3805301	2.2	41
2609987	2.2	70	3003280	2.2	48	3805001	2.2	40	3805305	2.2	41
2609988	2.2	70	3003281	2.2	48	3805002	2.2	40	3805306	2.2	41
2612001	2.2	90	3003282	2.2	48	3805003	2.2	40	3805307	2.2	41
2612002	2.2	90	3003283	2.2	48	3805004	2.2	40	3805311	2.2	41
2612003	2.2	90	3003284	2.2	48	3805005	2.2	40	3805312	2.2	41
2612004	2.2	90	3003285	2.2	48	3805006	2.2	40	3805313	2.2	41
2612005	2.2	90	3003320	2.2	48	3805007	2.2	40	3805314	2.2	41
2612006	2.2	90	3003321	2.2	48	3805008	2.2	40	3805317	2.2	41
2612007	2.2	90	3003322	2.2	48	3805009	2.2	40	3805318	2.2	41
2612008	2.2	90	3003323	2.2	48	3805010	2.2	40	3805319	2.2	41
2612013	2.2	90	3003324	2.2	48	3805011	2.2	40	3805323	2.2	41
2612014	2.2	90	3003400	2.2	48	3805012	2.2	40	3805324	2.2	41
2612015	2.2	90	3003500	2.2	48	3805013	2.2	40	3805325	2.2	41
2612016	2.2	90	3005100	2.2	47	3805014	2.2	40	3805329	2.2	41
2612017	2.2	90	3005119	2.2	47	3805015	2.2	40	3805330	2.2	41
2612018	2.2	90	3005208	2.2	47	3805016	2.2	40	3805331	2.2	41
2612019	2.2	90	3005305	2.2	47	3805017	2.2	40	3805335	2.2	41
2612020	2.2	90	3005313	2.2	47	3805018	2.2	40	3805336	2.2	41
2612023	2.2	90	3005402	2.2	47	3805019	2.2	40	3805337	2.2	41
2612024	2.2	90	3005410	2.2	47	3805020	2.2	40	3805601	2.2	42
2612025	2.2	90	3005429	2.2	47	3805021	2.2	40	3805602	2.2	42
2612026	2.2	90	3005437	2.2	47	3805022	2.2	40	3805603	2.2	42
2612027	2.2	90	3005445	2.2	47	3805023	2.2	40	3805604	2.2	42
2612028	2.2	90	3005500	2.2	47	3805024	2.2	40	3805605	2.2	42
2612029	2.2	90	3005518	2.2	47	3805028	2.2	40	3805606	2.2	42
2612030	2.2	90	3005607	2.2	47	3805037	2.2	40	3805607	2.2	42
2690196	2.2	86	3005615	2.2	47	3805047	2.2	40	3805608	2.2	42
2690200	2.2	86	3005623	2.2	47	3805050	2.2	40	3805621	2.2	42
2690212	2.2	86	3005704	2.2	47	3805064	2.2	40	3805622	2.2	42
2690220	2.2	86	3201072	2.2	51	3805100	2.2	40	3805623	2.2	42
2690235	2.2	86	3201073	2.2	51	3805101	2.2	40	3805624	2.2	42
2690240	2.2	86	3201074	2.2	51	3805102	2.2	40	3805625	2.2	42
2690250	2.2	86	3201075	2.2	51	3805103	2.2	40	3805626	2.2	42
2700077	2.2	55	3201076	2.2	51	3805104	2.2	40	3805627	2.2	42
2700093	2.2	55	3201090	2.2	51	3805105	2.2	40	3805628	2.2	42
2700115	2.2	55	3201112	2.2	51	3805106	2.2	40	3805629	2.2	42
2700131	2.2	55	3201139	2.2	51	3805107	2.2	40	3910001	4.0	6
2700166	2.2	55	3201163	2.2	51	3805108	2.2	40	3910002	4.0	6
2700212	2.2	55	3201210	2.2	51	3805109	2.2	40	3910003	4.0	6
2700298	2.2	55	3201295	2.2	51	3805110	2.2	40	3910004	4.0	6
2700360	2.2	55	3201368	2.2	51	3805111	2.2	40	3910005	4.0	6
2700425	2.2	55	3201481	2.2	51	3805112	2.2	40	3910006	4.0	6
2700484	2.2	55	3206000	2.2	44	3805113	2.2	40	3910007	4.0	6
2700512	2.2	55	3206001	2.2	44	3805114	2.2	40	3910008	4.0	6
2700516	2.2	55	3206002	2.2	44	3805115	2.2	40	3910009	4.0	6
2700517	2.2	55	3206003	2.2	44	3805116	2.2	40	3910010	4.0	6
2700520	2.2	55	3206004	2.2	44	3805117	2.2	40	3910011	4.0	6
2700521	2.2	55	3206005	2.2	44	3805118	2.2	40	3910012	4.0	6
2700525	2.2	55	3206006	2.2	44	3805119	2.2	40	4001001	3.1	49
2700532	2.2	55	3206007	2.2	44	3805120	2.2	40	4001109	3.1	49
2700540	2.2	55	3206052	2.2	44	3805121	2.2	40	4001206	3.1	49
2700550	2.2	55	3206058	2.2	44	3805122	2.2	40	4001303	3.1	49
2700563	2.2	55	3407512	2.2	61	3805123	2.2	40	4001400	3.1	49
3000109	2.2	47	3407516	2.2	61	3805124	2.2	40	4001508	3.1	49
3000117	2.2	47	3407520	2.2	61	3805128	2.2	40	4001559	3.1	49
3000125	2.2	47	3407525	2.2	61	3805137	2.2	40	4001605	3.1	49
3000206	2.2	47	3407532	2.2	61	3805147	2.2	40	4001656	3.1	49
3000303	2.2	47	3407540	2.2	61	3805150	2.2	40	4001702	3.1	49
3000311	2.2	47	3407550	2.2	61	3805200	2.2	41	4009100	3.1	49
3000401	2.2	47	3407563	2.2	61	3805201	2.2	41	4009207	3.1	49
3000419	2.2	47	3407607	2.2	61	3805205	2.2	41	4009304	3.1	49

Broj artikla	poglavlje	stranica	Broj artikla	poglavlje	stranica	Broj artikla	poglavlje	stranica	Broj artikla	poglavlje	stranica
Art. no.	chapter	page	Art. no.	chapter	page	Art. no.	chapter	page	Art. no.	chapter	page
4009401	3.1	49	4107507	3.4	117	4108329	3.4	114	4113279	3.4	134
4009509	3.1	49	4107509	3.4	117	4108336	3.4	114	4113320	3.4	134
4009550	3.1	49	4107511	3.4	117	4108342	3.4	114	4113329	3.4	134
4009606	3.1	49	4107513	3.4	117	4108348	3.4	114	4113330	3.4	134
4009658	3.1	49	4107516	3.4	117	4108400	3.4	114	4113339	3.4	134
4009695	3.1	49	4107521	3.4	117	4108401	3.4	114	4113400	3.4	134
4103312	3.1	50	4107529	3.4	117	4108402	3.4	114	4113409	3.4	134
4103313	3.1	50	4107536	3.4	117	4108403	3.4	114	4113410	3.4	134
4103316	3.1	50	4107542	3.4	117	4108712	3.4	128	4113419	3.4	134
4103317	3.1	50	4107548	3.4	117	4108716	3.4	128	4113500	3.4	134
4103320	3.1	50	4107609	3.4	118	4108720	3.4	128	4113509	3.4	134
4103321	3.1	50	4107611	3.4	118	4108725	3.4	128	4113510	3.4	134
4103325	3.1	50	4107613	3.4	118	4108732	3.4	128	4113519	3.4	134
4103326	3.1	50	4107616	3.4	118	4108740	3.4	128	4113630	3.4	134
4103332	3.1	50	4107621	3.4	118	4108750	3.4	128	4113639	3.4	134
4103333	3.1	50	4107629	3.4	118	4108763	3.4	128	4113640	3.4	134
4103340	3.1	50	4107709	3.4	118	4111120	3.4	131	4113649	3.4	134
4103341	3.1	50	4107711	3.4	118	4111129	3.4	131	4113750	3.4	134
4103350	3.1	50	4107713	3.4	118	4111150	3.4	131	4113759	3.4	134
4103351	3.1	50	4107716	3.4	118	4111159	3.4	131	4113760	3.4	134
4103363	3.1	50	4107721	3.4	118	4111160	3.4	131	4113769	3.4	134
4103364	3.1	50	4107729	3.4	118	4111169	3.4	131	4113800	3.4	134
4103512	3.1	50	4107800	3.4	120	4111200	3.4	131	4113809	3.4	134
4103516	3.1	50	4107801	3.4	120	4111209	3.4	131	4113810	3.4	134
4103520	3.1	50	4107802	3.4	120	4111210	3.4	131	4113819	3.4	134
4103521	3.1	50	4107803	3.4	120	4111219	3.4	131	4113900	3.4	134
4103525	3.1	50	4107804	3.4	120	4111250	3.4	131	4113909	3.4	134
4103532	3.1	50	4107805	3.4	120	4111259	3.4	131	4113910	3.4	134
4103540	3.1	50	4107806	3.4	120	4111260	3.4	131	4113919	3.4	134
4103550	3.1	50	4107807	3.4	120	4111269	3.4	131	4113990	3.4	134
4103563	3.1	50	4107809	3.4	120	4111270	3.4	131	4113999	3.4	134
4107012	3.4	115	4107810	3.4	120	4111279	3.4	131	4114120	3.4	137
4107016	3.4	115	4107811	3.4	120	4111320	3.4	131	4114129	3.4	137
4107017	3.4	115	4107812	3.4	120	4111329	3.4	131	4114160	3.4	137
4107020	3.4	115	4107901	3.4	119	4111330	3.4	131	4114169	3.4	137
4107021	3.4	115	4107902	3.4	119	4111339	3.4	131	4114170	3.4	137
4107025	3.4	115	4107903	3.4	119	4111400	3.4	131	4114179	3.4	137
4107026	3.4	115	4107904	3.4	119	4111409	3.4	131	4114200	3.4	137
4107032	3.4	115	4107905	3.4	119	4111410	3.4	131	4114209	3.4	137
4107033	3.4	115	4107906	3.4	119	4111419	3.4	131	4114210	3.4	137
4107040	3.4	115	4107907	3.4	119	4111500	3.4	131	4114219	3.4	137
4107050	3.4	115	4107908	3.4	119	4111509	3.4	131	4114220	3.4	137
4107063	3.4	115	4107909	3.4	119	4111510	3.4	131	4114229	3.4	137
4107112	3.4	115	4107910	3.4	119	4111519	3.4	131	4114250	3.4	137
4107116	3.4	115	4107911	3.4	119	4111630	3.4	131	4114259	3.4	137
4107117	3.4	115	4107912	3.4	119	4111639	3.4	131	4114260	3.4	137
4107120	3.4	115	4107913	3.4	119	4111640	3.4	131	4114269	3.4	137
4107121	3.4	115	4107914	3.4	119	4111649	3.4	131	4114270	3.4	137
4107125	3.4	115	4107915	3.4	119	4111750	3.4	131	4114279	3.4	137
4107126	3.4	115	4108012	3.4	113	4111759	3.4	131	4114320	3.4	137
4107132	3.4	115	4108016	3.4	113	4111760	3.4	131	4114329	3.4	137
4107133	3.4	115	4108020	3.4	113	4111769	3.4	131	4114330	3.4	137
4107140	3.4	115	4108025	3.4	113	4111800	3.4	131	4114339	3.4	137
4107150	3.4	115	4108032	3.4	113	4111809	3.4	131	4114400	3.4	137
4107163	3.4	115	4108040	3.4	113	4111810	3.4	131	4114409	3.4	137
4107216	3.4	116	4108050	3.4	113	4111819	3.4	131	4114410	3.4	137
4107220	3.4	116	4108063	3.4	113	4111900	3.4	131	4114419	3.4	137
4107221	3.4	116	4108112	3.4	113	4111909	3.4	131	4114500	3.4	137
4107225	3.4	116	4108116	3.4	113	4111910	3.4	131	4114509	3.4	137
4107226	3.4	116	4108120	3.4	113	4111919	3.4	131	4114510	3.4	137
4107232	3.4	116	4108125	3.4	113	4111980	3.4	131	4114519	3.4	137
4107233	3.4	116	4108132	3.4	113	4111989	3.4	131	4114630	3.4	137
4107240	3.4	116	4108140	3.4	113	4111990	3.4	131	4114639	3.4	137
4107316	3.4	116	4108150	3.4	113	4111999	3.4	131	4114640	3.4	137
4107320	3.4	116	4108163	3.4	113	4113120	3.4	134	4114649	3.4	137
4107321	3.4	116	4108207	3.4	114	4113129	3.4	134	4114750	3.4	137
4107325	3.4	116	4108209	3.4	114	4113160	3.4	134	4114759	3.4	137
4107326	3.4	116	4108211	3.4	114	4113169	3.4	134	4114760	3.4	137
4107332	3.4	116	4108213	3.4	114	4113170	3.4	134	4114769	3.4	137
4107333	3.4	116	4108216	3.4	114	4113179	3.4	134	4114800	3.4	137
4107340	3.4	116	4108221	3.4	114	4113200	3.4	134	4114809	3.4	137
4107407	3.4	117	4108229	3.4	114	4113209	3.4	134	4114810	3.4	137
4107409	3.4	117	4108236	3.4	114	4113210	3.4	134	4114819	3.4	137
4107411	3.4	117	4108242	3.4	114	4113219	3.4	134	4114900	3.4	137
4107413	3.4	117	4108248	3.4	114	4113220	3.4	134	4114909	3.4	137
4107416	3.4	117	4108307	3.4	114	4113229	3.4	134	4114910	3.4	137
4107421	3.4	117	4108309	3.4	114	4113250	3.4	134	4114919	3.4	137
4107429	3.4	117	4108311	3.4	114	4113259	3.4	134	4114990	3.4	137
4107436	3.4	117	4108313	3.4	114	4113260	3.4	134	4114999	3.4	137
4107442	3.4	117	4108316	3.4	114	4113269	3.4	134	4117209	3.4	137
4107448	3.4	117	4108321	3.4	114	4113270	3.4	134	4121070	3.4	132

Broj artikla Art. no.	poglavlje chapter	stranica page	Broj artikla Art. no.	poglavlje chapter	stranica page	Broj artikla Art. no.	poglavlje chapter	stranica page	Broj artikla Art. no.	poglavlje chapter	stranica page
4121079	3.4	132	4124130	3.4	138	4133069	3.4	136	4200098	3.1	38
4121090	3.4	132	4124139	3.4	138	4133100	3.4	136	4200101	3.1	38
4121099	3.4	132	4124140	3.4	138	4133109	3.4	136	4200102	3.1	38
4121110	3.4	132	4124149	3.4	138	4133110	3.4	136	4200110	3.1	38
4121119	3.4	132	4124160	3.4	138	4133119	3.4	136	4200128	3.1	38
4121130	3.4	132	4124169	3.4	138	4133120	3.4	136	4200136	3.1	38
4121139	3.4	132	4124170	3.4	138	4133129	3.4	136	4200143	3.1	38
4121140	3.4	132	4124179	3.4	138	4133200	3.4	136	4200144	3.1	38
4121149	3.4	132	4124210	3.4	138	4133209	3.4	136	4200152	3.1	38
4121160	3.4	132	4124219	3.4	138	4133210	3.4	136	4200160	3.1	38
4121169	3.4	132	4124290	3.4	138	4133219	3.4	136	4200178	3.1	38
4121210	3.4	132	4124299	3.4	138	4133220	3.4	136	4200179	3.1	38
4121219	3.4	132	4124300	3.4	138	4133229	3.4	136	4200186	3.1	38
4121290	3.4	132	4124309	3.4	138	4133300	3.4	136	4200187	3.1	38
4121299	3.4	132	4124360	3.4	138	4133309	3.4	136	4200195	3.1	38
4121300	3.4	132	4124369	3.4	138	4133310	3.4	136	4200196	3.1	38
4121309	3.4	132	4124370	3.4	138	4133319	3.4	136	4200217	3.1	38
4121360	3.4	132	4124379	3.4	138	4133340	3.4	136	4200292	3.1	38
4121369	3.4	132	4124420	3.4	138	4133349	3.4	136	4200365	3.1	38
4121370	3.4	132	4124429	3.4	138	4133350	3.4	136	4200420	3.1	38
4121379	3.4	132	4124480	3.4	138	4133359	3.4	136	4200489	3.1	38
4121420	3.4	132	4124489	3.4	138	4133360	3.4	136	4200500	3.1	38
4121429	3.4	132	4124500	3.4	138	4133369	3.4	136	4200537	3.1	38
4121480	3.4	132	4124509	3.4	138	4133370	3.4	136	4200750	3.1	39
4121489	3.4	132	4124510	3.4	138	4133379	3.4	136	4200751	3.1	39
4121500	3.4	132	4124519	3.4	138	4133400	3.4	136	4200752	3.1	39
4121509	3.4	132	4124530	3.4	138	4133409	3.4	136	4200760	3.1	39
4121530	3.4	132	4124539	3.4	138	4133410	3.4	136	4200761	3.1	39
4121539	3.4	132	4124540	3.4	138	4133419	3.4	136	4200762	3.1	39
4121540	3.4	132	4124549	3.4	138	4133450	3.4	136	4200763	3.1	39
4121549	3.4	132	4131020	3.4	133	4133459	3.4	136	4200764	3.1	39
4121550	3.4	132	4131029	3.4	133	4133460	3.4	136	4200770	3.1	39
4121559	3.4	132	4131030	3.4	133	4133469	3.4	136	4200771	3.1	39
4121560	3.4	132	4131039	3.4	133	4133500	3.4	136	4200772	3.1	39
4121569	3.4	132	4131040	3.4	133	4133509	3.4	136	4200773	3.1	39
4123070	3.4	135	4131049	3.4	133	4133510	3.4	136	4200780	3.1	39
4123079	3.4	135	4131050	3.4	133	4133519	3.4	136	4200781	3.1	39
4123090	3.4	135	4131059	3.4	133	4134050	3.4	139	4200782	3.1	39
4123099	3.4	135	4131100	3.4	133	4134059	3.4	139	4200790	3.1	39
4123100	3.4	135	4131109	3.4	133	4134060	3.4	139	4200794	3.1	39
4123109	3.4	135	4131110	3.4	133	4134069	3.4	139	4200795	3.1	39
4123110	3.4	135	4131119	3.4	133	4134100	3.4	139	4200796	3.1	39
4123119	3.4	135	4131200	3.4	133	4134109	3.4	139	4200800	3.1	40
4123120	3.4	135	4131209	3.4	133	4134110	3.4	139	4200801	3.1	40
4123129	3.4	135	4131210	3.4	133	4134119	3.4	139	4200802	3.1	40
4123130	3.4	135	4131219	3.4	133	4134120	3.4	139	4200810	3.1	40
4123139	3.4	135	4131220	3.4	133	4134129	3.4	139	4200811	3.1	40
4123140	3.4	135	4131229	3.4	133	4134200	3.4	139	4200812	3.1	40
4123149	3.4	135	4131300	3.4	133	4134209	3.4	139	4200813	3.1	40
4123160	3.4	135	4131309	3.4	133	4134210	3.4	139	4200814	3.1	40
4123169	3.4	135	4131310	3.4	133	4134219	3.4	139	4200820	3.1	40
4123170	3.4	135	4131319	3.4	133	4134220	3.4	139	4200821	3.1	40
4123179	3.4	135	4131340	3.4	133	4134229	3.4	139	4200822	3.1	40
4123210	3.4	135	4131349	3.4	133	4134300	3.4	139	4200830	3.1	40
4123219	3.4	135	4131350	3.4	133	4134309	3.4	139	4200831	3.1	40
4123290	3.4	135	4131359	3.4	133	4134310	3.4	139	4200832	3.1	40
4123299	3.4	135	4131360	3.4	133	4134319	3.4	139	4200833	3.1	40
4123300	3.4	135	4131369	3.4	133	4134340	3.4	139	4200835	3.1	40
4123309	3.4	135	4131370	3.4	133	4134349	3.4	139	4200836	3.1	40
4123360	3.4	135	4131379	3.4	133	4134350	3.4	139	4200837	3.1	40
4123369	3.4	135	4131400	3.4	133	4134359	3.4	139	4200840	3.1	40
4123370	3.4	135	4131409	3.4	133	4134360	3.4	139	4220307	3.1	11
4123379	3.4	135	4131410	3.4	133	4134369	3.4	139	4220309	3.1	11
4123420	3.4	135	4131419	3.4	133	4134370	3.4	139	4220311	3.1	11
4123429	3.4	135	4131450	3.4	133	4134379	3.4	139	4220313	3.1	11
4123480	3.4	135	4131459	3.4	133	4134400	3.4	139	4220316	3.1	11
4123489	3.4	135	4131460	3.4	133	4134409	3.4	139	4220321	3.1	11
4123510	3.4	135	4131469	3.4	133	4134410	3.4	139	4220329	3.1	11
4123519	3.4	135	4131500	3.4	133	4134419	3.4	139	4220336	3.1	11
4123530	3.4	135	4131509	3.4	133	4134450	3.4	139	4220342	3.1	11
4123539	3.4	135	4131510	3.4	133	4134459	3.4	139	4220348	3.1	11
4123540	3.4	135	4131519	3.4	133	4134460	3.4	139	4220351	3.1	11
4123549	3.4	135	4131550	3.4	133	4134469	3.4	139	4220352	3.1	11
4124090	3.4	138	4131559	3.4	133	4134500	3.4	139	4220353	3.1	11
4124099	3.4	138	4131560	3.4	133	4134509	3.4	139	4220354	3.1	11
4124100	3.4	138	4131569	3.4	133	4134510	3.4	139	4220355	3.1	11
4124109	3.4	138	4133010	3.4	136	4134519	3.4	139	4220356	3.1	11
4124110	3.4	138	4133019	3.4	136	4200055	3.1	38	4220357	3.1	11
4124119	3.4	138	4133050	3.4	136	4200056	3.1	38	4220358	3.1	11
4124120	3.4	138	4133059	3.4	136	4200071	3.1	38	4220359	3.1	11
4124129	3.4	138	4133060	3.4	136	4200080	3.1	38	4220360	3.1	11

Broj artikla	poglavlje	stranica	Broj artikla	poglavlje	stranica	Broj artikla	poglavlje	stranica	Broj artikla	poglavlje	stranica
Art. no.	chapter	page	Art. no.	chapter	page	Art. no.	chapter	page	Art. no.	chapter	page
4220407	3.1	12	4220955	3.2	55	4222505	3.4	129	4224620	3.1	31
4220409	3.1	12	4220956	3.2	55	4222506	3.4	129	4224621	3.1	31
4220411	3.1	12	4220957	3.2	55	4222507	3.4	129	4224622	3.1	31
4220413	3.1	12	4220958	3.2	55	4222508	3.4	129	4224626	3.1	31
4220416	3.1	12	4220959	3.2	55	4222509	3.4	129	4224627	3.1	31
4220421	3.1	12	4220960	3.2	55	4222510	3.4	129	4224651	3.1	31
4220429	3.1	12	4220961	3.2	55	4222511	3.4	129	4224655	3.1	31
4220436	3.1	12	4220962	3.2	55	4222512	3.4	129	4224675	3.1	31
4220442	3.1	12	4220963	3.2	55	4222521	3.4	130	4224676	3.1	31
4220448	3.1	12	4220964	3.2	55	4222522	3.4	130	4224680	3.1	31
4220451	3.1	12	4220965	3.2	55	4222523	3.4	130	4224681	3.1	31
4220452	3.1	12	4221079	3.1	28	4222524	3.4	130	4224682	3.1	31
4220453	3.1	12	4221095	3.1	28	4222525	3.4	130	4224683	3.1	31
4220454	3.1	12	4221117	3.1	28	4222526	3.4	130	4224684	3.1	31
4220455	3.1	12	4221133	3.1	28	4222527	3.4	130	4224685	3.1	31
4220456	3.1	12	4221168	3.1	28	4222528	3.4	130	4224686	3.1	31
4220457	3.1	12	4221214	3.1	28	4222529	3.4	130	4224687	3.1	31
4220458	3.1	12	4221290	3.1	28	4222530	3.4	130	4224690	3.1	31
4220459	3.1	12	4221362	3.1	28	4224300	3.1	30	4224700	3.1	31
4220460	3.1	12	4221427	3.1	28	4224305	3.1	30	4224705	3.1	31
4220612	3.1	13	4221486	3.1	28	4224306	3.1	30	4224706	3.1	31
4220616	3.1	13	4221507	3.1	28	4224307	3.1	30	4224707	3.1	31
4220620	3.1	13	4221509	3.1	28	4224310	3.1	30	4224710	3.1	31
4220625	3.1	13	4221511	3.1	28	4224311	3.1	30	4224711	3.1	31
4220632	3.1	13	4221513	3.1	28	4224315	3.1	30	4224715	3.1	31
4220640	3.1	13	4221516	3.1	28	4224316	3.1	30	4224716	3.1	31
4220650	3.1	13	4221521	3.1	28	4224317	3.1	30	4224717	3.1	31
4220663	3.1	13	4221529	3.1	28	4224320	3.1	30	4224720	3.1	31
4220670	3.1	14	4221536	3.1	28	4224321	3.1	30	4224721	3.1	31
4220671	3.1	14	4221542	3.1	28	4224322	3.1	30	4224722	3.1	31
4220673	3.1	14	4221548	3.1	28	4224326	3.1	30	4224726	3.1	31
4220675	3.1	14	4221712	3.1	29	4224327	3.1	30	4224727	3.1	31
4220677	3.1	14	4221714	3.1	29	4224351	3.1	30	4224751	3.1	31
4220678	3.1	14	4221716	3.1	29	4224355	3.1	30	4224755	3.1	31
4220679	3.1	14	4221717	3.1	29	4224375	3.1	30	4224775	3.1	31
4220680	3.1	14	4221718	3.1	29	4224376	3.1	30	4224776	3.1	31
4220712	3.1	13	4221719	3.1	29	4224380	3.1	30	4224780	3.1	31
4220716	3.1	13	4221720	3.1	29	4224381	3.1	30	4224781	3.1	31
4220720	3.1	13	4221721	3.1	29	4224382	3.1	30	4224782	3.1	31
4220725	3.1	13	4221722	3.1	29	4224383	3.1	30	4224783	3.1	31
4220732	3.1	13	4221723	3.1	29	4224384	3.1	30	4224784	3.1	31
4220740	3.1	13	4221725	3.1	29	4224385	3.1	30	4224785	3.1	31
4220750	3.1	13	4221726	3.1	29	4224386	3.1	30	4224786	3.1	31
4220763	3.1	13	4221727	3.1	29	4224387	3.1	30	4224787	3.1	31
4220770	3.1	14	4221728	3.1	29	4224390	3.1	30	4224790	3.1	31
4220771	3.1	14	4221732	3.1	29	4224450	3.1	30	4224801	3.4	123
4220773	3.1	14	4221733	3.1	29	4224455	3.1	30	4224802	3.4	123
4220775	3.1	14	4221734	3.1	29	4224456	3.1	30	4224803	3.4	123
4220777	3.1	14	4221735	3.1	29	4224457	3.1	30	4224804	3.4	123
4220778	3.1	14	4221740	3.1	29	4224460	3.1	30	4224805	3.4	123
4220779	3.1	14	4221741	3.1	29	4224461	3.1	30	4224806	3.4	123
4220780	3.1	14	4221750	3.1	29	4224465	3.1	30	4224807	3.4	123
4220800	3.1	15	4221751	3.1	29	4224466	3.1	30	4224808	3.4	123
4220801	3.1	15	4221760	3.1	29	4224467	3.1	30	4224809	3.4	123
4220802	3.1	15	4221761	3.1	29	4224480	3.1	30	4224810	3.4	123
4220803	3.1	15	4222012	3.1	36	4224481	3.1	30	4224811	3.4	123
4220810	3.1	15	4222016	3.1	36	4224482	3.1	30	4224812	3.4	123
4220811	3.1	15	4222017	3.1	36	4224506	3.1	30	4224813	3.4	123
4220812	3.1	15	4222020	3.1	36	4224507	3.1	30	4224814	3.4	123
4220813	3.1	15	4222021	3.1	36	4224551	3.1	30	4224815	3.4	123
4220850	3.1	16	4222025	3.1	36	4224555	3.1	30	4224816	3.4	123
4220851	3.1	16	4222026	3.1	36	4224575	3.1	30	4224817	3.4	123
4220852	3.1	16	4222033	3.1	36	4224576	3.1	30	4224818	3.4	123
4220853	3.1	16	4222034	3.1	36	4224580	3.1	30	4224819	3.4	123
4220854	3.1	16	4222041	3.1	36	4224581	3.1	30	4224820	3.4	123
4220855	3.1	16	4222050	3.1	36	4224582	3.1	30	4224821	3.4	123
4220856	3.1	16	4222063	3.1	36	4224583	3.1	30	4224822	3.4	123
4220857	3.1	16	4222075	3.1	36	4224584	3.1	30	4224823	3.4	123
4220860	3.1	16	4222091	3.1	36	4224585	3.1	30	4224824	3.4	123
4220861	3.1	16	4222113	3.1	36	4224586	3.1	30	4224825	3.4	123
4220862	3.1	16	4222130	3.1	36	4224587	3.1	30	4224826	3.4	123
4220863	3.1	16	4222164	3.1	36	4224590	3.1	30	4224827	3.4	123
4220864	3.1	16	4222210	3.1	36	4224600	3.1	31	4224860	3.4	121
4220865	3.1	16	4222296	3.1	36	4224605	3.1	31	4224861	3.4	121
4220866	3.1	16	4222369	3.1	36	4224606	3.1	31	4224862	3.4	121
4220867	3.1	16	4222423	3.1	36	4224607	3.1	31	4224863	3.4	121
4220950	3.2	55	4222482	3.1	36	4224610	3.1	31	4224864	3.4	121
4220951	3.2	55	4222501	3.4	129	4224611	3.1	31	4224865	3.4	121
4220952	3.2	55	4222502	3.4	129	4224615	3.1	31	4224866	3.4	121
4220953	3.2	55	4222503	3.4	129	4224616	3.1	31	4224867	3.4	121
4220954	3.2	55	4222504	3.4	129	4224617	3.1	31	4224868	3.4	121

Broj artikla	poglavlje	stranica	Broj artikla	poglavlje	stranica	Broj artikla	poglavlje	stranica	Broj artikla	poglavlje	stranica
Art. no.	chapter	page	Art. no.	chapter	page	Art. no.	chapter	page	Art. no.	chapter	page
4224869	3.4	121	4247636	3.4	126	4247842	3.4	124	4248629	3.1	33
4224870	3.4	121	4247637	3.4	126	4247843	3.4	124	4248631	3.1	33
4224871	3.4	121	4247638	3.4	127	4247844	3.4	124	4248632	3.1	33
4224872	3.4	121	4247639	3.4	127	4247845	3.4	124	4248634	3.1	33
4224873	3.4	121	4247640	3.4	127	4247846	3.4	124	4248640	3.1	32
4224874	3.4	121	4247641	3.4	127	4247847	3.4	124	4248641	3.1	32
4224875	3.4	121	4247642	3.4	127	4247848	3.4	124	4248642	3.1	32
4224876	3.4	121	4247643	3.4	127	4247849	3.4	124	4248643	3.1	32
4224877	3.4	121	4247644	3.4	127	4247850	3.4	124	4248644	3.1	32
4224878	3.4	121	4247645	3.4	127	4247851	3.4	124	4248645	3.1	32
4224879	3.4	121	4247646	3.4	127	4247852	3.4	124	4248646	3.1	32
4224880	3.4	121	4247647	3.4	127	4247853	3.4	124	4248647	3.1	32
4224881	3.4	121	4247648	3.4	127	4247854	3.4	124	4248648	3.1	32
4224882	3.4	121	4247649	3.4	127	4247855	3.4	124	4248649	3.1	32
4224883	3.4	121	4247650	3.4	127	4247856	3.4	124	4248650	3.1	32
4224884	3.4	121	4247651	3.4	127	4247857	3.4	124	4248651	3.1	32
4224885	3.4	121	4247652	3.4	127	4247858	3.4	124	4248652	3.1	32
4224886	3.4	121	4247653	3.4	127	4247859	3.4	124	4248653	3.1	32
4224890	3.4	122	4247654	3.4	127	4247860	3.4	124	4248654	3.1	32
4224891	3.4	122	4247655	3.4	127	4247861	3.4	124	4248655	3.1	32
4224892	3.4	122	4247656	3.4	127	4247862	3.4	124	4248656	3.1	32
4224893	3.4	122	4247657	3.4	127	4247863	3.4	124	4248657	3.1	32
4224894	3.4	122	4247658	3.4	127	4247864	3.4	124	4248658	3.1	32
4224895	3.4	122	4247659	3.4	127	4247865	3.4	124	4248659	3.1	32
4224896	3.4	122	4247660	3.4	127	4247866	3.4	124	4248660	3.1	32
4224897	3.4	122	4247661	3.4	127	4247867	3.4	124	4248661	3.1	32
4224898	3.4	122	4247662	3.4	127	4247868	3.4	125	4248662	3.1	32
4224899	3.4	122	4247663	3.4	127	4247869	3.4	125	4248663	3.1	32
4224900	3.4	122	4247664	3.4	127	4247870	3.4	125	4248664	3.1	32
4224901	3.4	122	4247665	3.4	127	4247871	3.4	125	4248665	3.1	32
4224902	3.4	122	4247666	3.4	127	4247872	3.4	125	4248666	3.1	32
4224903	3.4	122	4247667	3.4	127	4247873	3.4	125	4248667	3.1	32
4224904	3.4	122	4247668	3.4	127	4247874	3.4	125	4248668	3.1	32
4224905	3.4	122	4247669	3.4	127	4247875	3.4	125	4248669	3.1	32
4224906	3.4	122	4247670	3.4	127	4247876	3.4	125	4248670	3.1	32
4224907	3.4	122	4247671	3.4	127	4247877	3.4	125	4248671	3.1	32
4224908	3.4	122	4247672	3.4	127	4247878	3.4	125	4248672	3.1	32
4224909	3.4	122	4247673	3.4	127	4247879	3.4	125	4248673	3.1	32
4224910	3.4	122	4247674	3.4	127	4247880	3.4	125	4248674	3.1	32
4224911	3.4	122	4247675	3.4	127	4247881	3.4	125	4248675	3.1	32
4224912	3.4	122	4247676	3.4	127	4247882	3.4	125	4248677	3.1	33
4224913	3.4	122	4247677	3.4	127	4247883	3.4	125	4248678	3.1	33
4224914	3.4	122	4247678	3.4	127	4247884	3.4	125	4248679	3.1	33
4224915	3.4	122	4247679	3.4	127	4247885	3.4	125	4248680	3.1	33
4224916	3.4	122	4247680	3.4	127	4247886	3.4	125	4248681	3.1	33
4247600	3.4	126	4247681	3.4	127	4247887	3.4	125	4248682	3.1	33
4247601	3.4	126	4247682	3.4	127	4247888	3.4	125	4248683	3.1	33
4247602	3.4	126	4247683	3.4	127	4247889	3.4	125	4248684	3.1	33
4247603	3.4	126	4247684	3.4	127	4247890	3.4	125	4248685	3.1	33
4247604	3.4	126	4247685	3.4	127	4247891	3.4	125	4248686	3.1	33
4247605	3.4	126	4247686	3.4	127	4247892	3.4	125	4248687	3.1	33
4247606	3.4	126	4247687	3.4	127	4247893	3.4	125	4248688	3.1	33
4247607	3.4	126	4247688	3.4	127	4247894	3.4	125	4248689	3.1	33
4247608	3.4	126	4247689	3.4	127	4247895	3.4	125	4248690	3.1	33
4247609	3.4	126	4247690	3.4	127	4247896	3.4	125	4248691	3.1	33
4247610	3.4	126	4247691	3.4	127	4247897	3.4	125	4248692	3.1	33
4247611	3.4	126	4247692	3.4	127	4247898	3.4	125	4248693	3.1	33
4247612	3.4	126	4247693	3.4	127	4247899	3.4	125	4248694	3.1	33
4247613	3.4	126	4247694	3.4	127	4247900	3.4	125	4248695	3.1	33
4247614	3.4	126	4247695	3.4	127	4247901	3.4	125	4248696	3.1	33
4247615	3.4	126	4247696	3.4	127	4247902	3.4	125	4248697	3.1	33
4247616	3.4	126	4247697	3.4	127	4247903	3.4	125	4248698	3.1	33
4247617	3.4	126	4247698	3.4	127	4247904	3.4	125	4248699	3.1	33
4247618	3.4	126	4247699	3.4	127	4247905	3.4	125	4248700	3.1	33
4247619	3.4	126	4247700	3.4	127	4247906	3.4	125	4248701	3.1	33
4247620	3.4	126	4247701	3.4	127	4247907	3.4	125	4248702	3.1	33
4247621	3.4	126	4247702	3.4	127	4247908	3.4	125	4248703	3.1	33
4247622	3.4	126	4247703	3.4	127	4247909	3.4	125	4248704	3.1	33
4247623	3.4	126	4247704	3.4	127	4248404	3.1	32	4248705	3.1	33
4247624	3.4	126	4247830	3.4	124	4248405	3.1	32	4248706	3.1	33
4247625	3.4	126	4247831	3.4	124	4248407	3.1	32	4248707	3.1	33
4247626	3.4	126	4247832	3.4	124	4248409	3.1	33	4248708	3.1	33
4247627	3.4	126	4247833	3.4	124	4248529	3.1	33	4248709	3.1	33
4247628	3.4	126	4247834	3.4	124	4248531	3.1	33	4248710	3.1	33
4247629	3.4	126	4247835	3.4	124	4248539	3.1	33	4248711	3.1	33
4247630	3.4	126	4247836	3.4	124	4248541	3.1	33	4248712	3.1	33
4247631	3.4	126	4247837	3.4	124	4248542	3.1	33	4248713	3.1	33
4247632	3.4	126	4247838	3.4	124	4248543	3.1	33	4248714	3.1	33
4247633	3.4	126	4247839	3.4	124	4248610	3.1	33	4248715	3.1	33
4247634	3.4	126	4247840	3.4	124	4248612	3.1	33	4248716	3.1	33
4247635	3.4	126	4247841	3.4	124	4248614	3.1	33	4248717	3.1	33

Broj artikla	poglavlje	stranica	Broj artikla	poglavlje	stranica	Broj artikla	poglavlje	stranica	Broj artikla	poglavlje	stranica
Art. no.	chapter	page	Art. no.	chapter	page	Art. no.	chapter	page	Art. no.	chapter	page
4248719	3.1	33	4249694	3.1	35	4305500	3.1	43	4309305	3.1	45
4248720	3.1	33	4249695	3.1	35	4305501	3.1	43	4309310	3.1	45
4248721	3.1	33	4249696	3.1	35	4305502	3.1	43	4309311	3.1	45
4248722	3.1	33	4249697	3.1	35	4305503	3.1	43	4309312	3.1	45
4248723	3.1	33	4249698	3.1	35	4305504	3.1	43	4309313	3.1	45
4248724	3.1	33	4249699	3.1	35	4305505	3.1	43	4309315	3.1	45
4248725	3.1	33	4249700	3.1	35	4305506	3.1	43	4309316	3.1	45
4248727	3.1	33	4249701	3.1	35	4305507	3.1	43	4309320	3.1	45
4249600	3.1	34	4264007	3.2	56	4305508	3.1	43	4309321	3.1	45
4249601	3.1	34	4264009	3.2	56	4305509	3.1	43	4309322	3.1	45
4249602	3.1	34	4264011	3.2	56	4305510	3.1	43	4309323	3.1	45
4249603	3.1	34	4264013	3.2	56	4305511	3.1	43	4309325	3.1	45
4249604	3.1	34	4264016	3.2	56	4305512	3.1	43	4309326	3.1	45
4249610	3.1	34	4264021	3.2	56	4305513	3.1	43	4309327	3.1	45
4249611	3.1	34	4264029	3.2	56	4305514	3.1	43	4309330	3.1	45
4249612	3.1	34	4264036	3.2	56	4305515	3.1	43	4309331	3.1	45
4249613	3.1	34	4264112	3.2	56	4306090	3.3	82	4309332	3.1	45
4249614	3.1	34	4264116	3.2	56	4306112	3.3	82	4309333	3.1	45
4249615	3.1	34	4264117	3.2	56	4306139	3.3	82	4309335	3.1	45
4249616	3.1	34	4264120	3.2	56	4306163	3.3	82	4309336	3.1	45
4249617	3.1	34	4264121	3.2	56	4306210	3.3	82	4309337	3.1	45
4249618	3.1	34	4264125	3.2	56	4306295	3.3	82	4650494	3.1	10
4249619	3.1	34	4264126	3.2	56	4306316	3.3	82	4650495	3.1	10
4249620	3.1	34	4264132	3.2	56	4306317	3.3	82	4650496	3.1	10
4249621	3.1	34	4264133	3.2	56	4306320	3.3	82	4650497	3.1	10
4249622	3.1	34	4264134	3.2	56	4306321	3.3	82	4650498	3.1	10
4249623	3.1	34	4264135	3.2	56	4306325	3.3	82	4651709	3.1	37
4249624	3.1	34	4264217	3.2	56	4306332	3.3	82	4651710	3.1	37
4249625	3.1	34	4264221	3.2	56	4307003	3.3	83	4651711	3.1	37
4249626	3.1	34	4264226	3.2	56	4307011	3.3	83	4651712	3.1	37
4249627	3.1	34	4264232	3.2	56	4307020	3.3	83	4651713	3.1	37
4249628	3.1	34	4264240	3.2	56	4307038	3.3	83	4651714	3.1	37
4249640	3.1	34	4264241	3.2	56	4307046	3.3	83	4651715	3.1	37
4249641	3.1	34	4264416	3.2	54	4307054	3.3	83	4651716	3.1	37
4249642	3.1	34	4264420	3.2	54	4307062	3.3	83	4651717	3.1	37
4249643	3.1	34	4264425	3.2	54	4307612	3.3	83	4651718	3.1	37
4249644	3.1	34	4264432	3.2	54	4307616	3.3	83	4651719	3.1	37
4249645	3.1	34	4264440	3.2	54	4307617	3.3	83	4651720	3.1	37
4249646	3.1	34	4264450	3.2	54	4307620	3.3	83	4651721	3.1	37
4249647	3.1	34	4264463	3.2	54	4307621	3.3	83	4651722	3.1	37
4249648	3.1	34	4300009	3.1	41	4307625	3.3	83	4651724	3.1	37
4249649	3.1	34	4300017	3.1	41	4307632	3.3	83	4651725	3.1	37
4249650	3.1	34	4300025	3.1	41	4308093	3.1	42	4651726	3.1	37
4249651	3.1	34	4300033	3.1	41	4308115	3.1	42	4651727	3.1	37
4249652	3.1	34	4300041	3.1	41	4308131	3.1	42	4651728	3.1	37
4249653	3.1	34	4300050	3.1	41	4308166	3.1	42	4651807	3.1	37
4249654	3.1	34	4300068	3.1	41	4308212	3.1	42	4651809	3.1	37
4249655	3.1	34	4300116	3.1	41	4308298	3.1	42	4651811	3.1	37
4249656	3.1	34	4300120	3.1	41	4308516	3.1	42	4651813	3.1	37
4249657	3.1	34	4300121	3.1	41	4308520	3.1	42	4651815	3.1	37
4249658	3.1	35	4300125	3.1	41	4308521	3.1	42	4834217	5.5	86
4249659	3.1	35	4300126	3.1	41	4308525	3.1	42	5202078	3.1	47
4249660	3.1	35	4300132	3.1	41	4308526	3.1	42	5202094	3.1	47
4249661	3.1	35	4300133	3.1	41	4308532	3.1	42	5202116	3.1	47
4249662	3.1	35	4304071	3.3	81	4308533	3.1	42	5202132	3.1	47
4249663	3.1	35	4304098	3.3	81	4309014	3.1	44	5202167	3.1	47
4249664	3.1	35	4304110	3.3	81	4309022	3.1	44	5202213	3.1	47
4249670	3.1	35	4304136	3.3	81	4309030	3.1	44	5202299	3.1	47
4249671	3.1	35	4304160	3.3	81	4309049	3.1	44	5202361	3.1	47
4249672	3.1	35	4304217	3.3	81	4309057	3.1	44	5202418	3.1	47
4249673	3.1	35	4304292	3.3	81	4309065	3.1	44	5202426	3.1	47
4249674	3.1	35	4304365	3.3	81	4309073	3.1	44	5202434	3.1	47
4249675	3.1	35	4304420	3.3	81	4309081	3.1	44	5202485	3.1	47
4249676	3.1	35	4304489	3.3	81	4309090	3.1	44	5202507	3.1	47
4249677	3.1	35	4304512	3.3	81	4309103	3.1	44	5202515	3.1	47
4249678	3.1	35	4304516	3.3	81	4309111	3.1	44	5202590	3.1	47
4249679	3.1	35	4304517	3.3	81	4309120	3.1	44	5202604	3.1	47
4249680	3.1	35	4304520	3.3	81	4309138	3.1	44	5202612	3.1	47
4249681	3.1	35	4304521	3.3	81	4309146	3.1	44	5202620	3.1	47
4249682	3.1	35	4304525	3.3	81	4309154	3.1	44	5203112	3.1	48
4249683	3.1	35	4304532	3.3	81	4309162	3.1	44	5203116	3.1	48
4249684	3.1	35	4305078	3.1	43	4309170	3.1	44	5203120	3.1	48
4249685	3.1	35	4305094	3.1	43	4309189	3.1	44	5203121	3.1	48
4249686	3.1	35	4305116	3.1	43	4309197	3.1	44	5203125	3.1	48
4249687	3.1	35	4305132	3.1	43	4309200	3.1	44	5203126	3.1	48
4249688	3.1	35	4305167	3.1	43	4309219	3.1	44	5203132	3.1	48
4249689	3.1	35	4305213	3.1	43	4309227	3.1	44	5203133	3.1	48
4249690	3.1	35	4305299	3.1	43	4309235	3.1	44	5203140	3.1	48
4249691	3.1	35	4305361	3.1	43	4309243	3.1	44	5203150	3.1	48
4249692	3.1	35	4305426	3.1	43	4309251	3.1	44	5203151	3.1	48
4249693	3.1	35	4305485	3.1	43	4309300	3.1	45	5203163	3.1	48

Broj artikla Art. no.	poglavlje chapter	stranica page	Broj artikla Art. no.	poglavlje chapter	stranica page	Broj artikla Art. no.	poglavlje chapter	stranica page	Broj artikla Art. no.	poglavlje chapter	stranica page
5211107	3.1	19	5306111	3.1	46	5307750	3.1	8	5308955	3.1	7
5211109	3.1	19	5306112	3.1	46	5307763	3.1	8	5308956	3.1	7
5211111	3.1	19	5306113	3.1	46	5308070	3.1	6	5308957	3.1	7
5211113	3.1	19	5306114	3.1	46	5308097	3.1	6	5308958	3.1	7
5211116	3.1	19	5306116	3.1	46	5308119	3.1	6	5308959	3.1	7
5211121	3.1	19	5306117	3.1	46	5308135	3.1	6	5308960	3.1	7
5211129	3.1	19	5306130	3.1	46	5308160	3.1	6	5308961	3.1	7
5211150	3.1	19	5306131	3.1	46	5308216	3.1	6	5308962	3.1	7
5211151	3.1	19	5306132	3.1	46	5308291	3.1	6	5309007	3.1	6
5211152	3.1	19	5306133	3.1	46	5308364	3.1	6	5309009	3.1	6
5211153	3.1	19	5306140	3.1	46	5308365	3.1	6	5309011	3.1	6
5211154	3.1	19	5306141	3.1	46	5308366	3.1	6	5309013	3.1	6
5211155	3.1	19	5306142	3.1	46	5308507	3.1	6	5309016	3.1	6
5211156	3.1	19	5306143	3.1	46	5308509	3.1	6	5309021	3.1	6
5211157	3.1	19	5306150	3.1	46	5308511	3.1	6	5309029	3.1	6
5211158	3.1	19	5306151	3.1	46	5308513	3.1	6	5309036	3.1	6
5211159	3.1	19	5306152	3.1	46	5308516	3.1	6	5309042	3.1	6
5211307	3.1	19	5307012	3.1	8	5308521	3.1	6	5309048	3.1	6
5211309	3.1	19	5307016	3.1	8	5308529	3.1	6	5309107	3.1	6
5211311	3.1	19	5307017	3.1	8	5308536	3.1	6	5309109	3.1	6
5211313	3.1	19	5307020	3.1	8	5308537	3.1	6	5309111	3.1	6
5211316	3.1	19	5307021	3.1	8	5308538	3.1	6	5309113	3.1	6
5211321	3.1	19	5307025	3.1	8	5308707	3.1	6	5309116	3.1	6
5211329	3.1	19	5307026	3.1	8	5308709	3.1	6	5309121	3.1	6
5211350	3.1	19	5307032	3.1	8	5308711	3.1	6	5309129	3.1	6
5211351	3.1	19	5307040	3.1	8	5308713	3.1	6	5309136	3.1	6
5211352	3.1	19	5307050	3.1	8	5308716	3.1	6	5309142	3.1	6
5211353	3.1	19	5307063	3.1	8	5308721	3.1	6	5309148	3.1	6
5211354	3.1	19	5307112	3.1	8	5308729	3.1	6	5309207	3.1	6
5211355	3.1	19	5307116	3.1	8	5308736	3.1	6	5309209	3.1	6
5211356	3.1	19	5307117	3.1	8	5308737	3.1	6	5309211	3.1	6
5211357	3.1	19	5307120	3.1	8	5308738	3.1	6	5309213	3.1	6
5211358	3.1	19	5307121	3.1	8	5308900	3.1	9	5309216	3.1	6
5211359	3.1	19	5307125	3.1	8	5308901	3.1	9	5309221	3.1	6
5211416	3.1	19	5307126	3.1	8	5308902	3.1	9	5309229	3.1	6
5211420	3.1	19	5307132	3.1	8	5308903	3.1	9	5309236	3.1	6
5211421	3.1	19	5307140	3.1	8	5308904	3.1	9	5309242	3.1	6
5211425	3.1	19	5307150	3.1	8	5308905	3.1	9	5309248	3.1	6
5211432	3.1	19	5307163	3.1	8	5308906	3.1	9	5309512	3.1	7
5211441	3.1	19	5307212	3.1	8	5308907	3.1	9	5309515	3.1	7
5211442	3.1	19	5307216	3.1	8	5308910	3.1	9	5309516	3.1	7
5211443	3.1	19	5307217	3.1	8	5308911	3.1	9	5309519	3.1	7
5211444	3.1	19	5307220	3.1	8	5308912	3.1	9	5309520	3.1	7
5211445	3.1	19	5307221	3.1	8	5308913	3.1	9	5309524	3.1	7
5211446	3.1	19	5307225	3.1	8	5308914	3.1	9	5309525	3.1	7
5211447	3.1	19	5307226	3.1	8	5308915	3.1	9	5309532	3.1	7
5211448	3.1	19	5307232	3.1	8	5308916	3.1	9	5309540	3.1	7
5211616	3.1	19	5307240	3.1	8	5308917	3.1	9	5309550	3.1	7
5211620	3.1	19	5307250	3.1	8	5308920	3.1	9	5309563	3.1	7
5211621	3.1	19	5307263	3.1	8	5308921	3.1	9	5309612	3.1	7
5211625	3.1	19	5307512	3.1	8	5308922	3.1	9	5309615	3.1	7
5211632	3.1	19	5307516	3.1	8	5308923	3.1	9	5309616	3.1	7
5211641	3.1	19	5307517	3.1	8	5308924	3.1	9	5309619	3.1	7
5211642	3.1	19	5307520	3.1	8	5308925	3.1	9	5309620	3.1	7
5211643	3.1	19	5307521	3.1	8	5308926	3.1	9	5309624	3.1	7
5211644	3.1	19	5307525	3.1	8	5308927	3.1	9	5309625	3.1	7
5211645	3.1	19	5307526	3.1	8	5308930	3.1	7	5309632	3.1	7
5211646	3.1	19	5307532	3.1	8	5308931	3.1	7	5309640	3.1	7
5211647	3.1	19	5307540	3.1	8	5308932	3.1	7	5309650	3.1	7
5211648	3.1	19	5307550	3.1	8	5308933	3.1	7	5309663	3.1	7
5306007	3.1	46	5307563	3.1	8	5308934	3.1	7	5309712	3.1	7
5306009	3.1	46	5307612	3.1	8	5308935	3.1	7	5309715	3.1	7
5306011	3.1	46	5307616	3.1	8	5308936	3.1	7	5309716	3.1	7
5306012	3.1	46	5307617	3.1	8	5308937	3.1	7	5309719	3.1	7
5306013	3.1	46	5307620	3.1	8	5308938	3.1	7	5309720	3.1	7
5306014	3.1	46	5307621	3.1	8	5308939	3.1	7	5309724	3.1	7
5306016	3.1	46	5307625	3.1	8	5308940	3.1	7	5309725	3.1	7
5306017	3.1	46	5307626	3.1	8	5308941	3.1	7	5309732	3.1	7
5306030	3.1	46	5307632	3.1	8	5308942	3.1	7	5309740	3.1	7
5306031	3.1	46	5307640	3.1	8	5308943	3.1	7	5309750	3.1	7
5306032	3.1	46	5307650	3.1	8	5308944	3.1	7	5309763	3.1	7
5306033	3.1	46	5307663	3.1	8	5308945	3.1	7	5313610	3.1	18
5306040	3.1	46	5307712	3.1	8	5308946	3.1	7	5313611	3.1	18
5306041	3.1	46	5307716	3.1	8	5308947	3.1	7	5313612	3.1	18
5306042	3.1	46	5307717	3.1	8	5308948	3.1	7	5313613	3.1	18
5306043	3.1	46	5307720	3.1	8	5308949	3.1	7	5313614	3.1	18
5306050	3.1	46	5307721	3.1	8	5308950	3.1	7	5313615	3.1	18
5306051	3.1	46	5307725	3.1	8	5308951	3.1	7	5313616	3.1	18
5306052	3.1	46	5307726	3.1	8	5308952	3.1	7	5313620	3.1	18
5306107	3.1	46	5307732	3.1	8	5308953	3.1	7	5313621	3.1	18
5306109	3.1	46	5307740	3.1	8	5308954	3.1	7	5313622	3.1	18

Broj artikla	poglavlje	stranica	Broj artikla	poglavlje	stranica	Broj artikla	poglavlje	stranica	Broj artikla	poglavlje	stranica
Art. no.	chapter	page	Art. no.	chapter	page	Art. no.	chapter	page	Art. no.	chapter	page
5313623	3.1	18	5315503	3.1	23	5315674	3.1	24	5315879	3.1	24
5313624	3.1	18	5315504	3.1	23	5315675	3.1	24	5315880	3.1	24
5313625	3.1	18	5315510	3.1	23	5315676	3.1	24	5315881	3.1	24
5313626	3.1	18	5315515	3.1	24	5315677	3.1	24	5315891	3.1	24
5313640	3.1	18	5315516	3.1	24	5315678	3.1	24	5315892	3.1	24
5313641	3.1	18	5315520	3.1	24	5315679	3.1	24	5315893	3.1	24
5313642	3.1	18	5315521	3.1	24	5315683	3.1	24	5315894	3.1	24
5313643	3.1	18	5315522	3.1	24	5315684	3.1	24	5315895	3.1	24
5313644	3.1	18	5315523	3.1	24	5315690	3.1	24	5315896	3.1	24
5313650	3.1	18	5315524	3.1	24	5315691	3.1	24	5315897	3.1	24
5313651	3.1	18	5315525	3.1	24	5315692	3.1	24	5315898	3.1	24
5313652	3.1	18	5315526	3.1	24	5315693	3.1	24	5315899	3.1	24
5313653	3.1	18	5315527	3.1	24	5315694	3.1	24	5315900	3.1	24
5313654	3.1	18	5315528	3.1	24	5315695	3.1	24	5315963	3.1	24
5313670	3.1	18	5315529	3.1	24	5315696	3.1	24	5315964	3.1	24
5313671	3.1	18	5315530	3.1	24	5315697	3.1	24	5316100	3.1	25
5313672	3.1	18	5315531	3.1	24	5315698	3.1	24	5316101	3.1	25
5313673	3.1	18	5315532	3.1	24	5315699	3.1	24	5316102	3.1	25
5313674	3.1	18	5315540	3.1	24	5315700	3.1	24	5316103	3.1	25
5313675	3.1	18	5315542	3.1	24	5315800	3.1	23	5316104	3.1	25
5313676	3.1	18	5315543	3.1	24	5315801	3.1	23	5316200	3.1	25
5313677	3.1	18	5315544	3.1	24	5315810	3.1	23	5316201	3.1	25
5313680	3.1	18	5315545	3.1	24	5315811	3.1	23	5316202	3.1	25
5313681	3.1	18	5315546	3.1	24	5315812	3.1	23	5316203	3.1	25
5313682	3.1	18	5315547	3.1	24	5315813	3.1	23	5316204	3.1	25
5313683	3.1	18	5315600	3.1	23	5315814	3.1	23	5316205	3.1	25
5313684	3.1	18	5315601	3.1	23	5315815	3.1	23	5316206	3.1	25
5313685	3.1	18	5315610	3.1	23	5315816	3.1	23	5316207	3.1	25
5313686	3.1	18	5315611	3.1	23	5315817	3.1	23	5316208	3.1	25
5313687	3.1	18	5315612	3.1	23	5315820	3.1	23	5316209	3.1	25
5313710	3.1	18	5315613	3.1	23	5315821	3.1	23	5316210	3.1	25
5313711	3.1	18	5315614	3.1	23	5315822	3.1	23	5316211	3.1	25
5313712	3.1	18	5315615	3.1	23	5315823	3.1	23	5316212	3.1	25
5313713	3.1	18	5315616	3.1	23	5315824	3.1	23	5316213	3.1	25
5313714	3.1	18	5315617	3.1	23	5315825	3.1	23	5316214	3.1	25
5313715	3.1	18	5315620	3.1	23	5315826	3.1	23	5316215	3.1	25
5313716	3.1	18	5315621	3.1	23	5315827	3.1	23	5316216	3.1	25
5313717	3.1	18	5315622	3.1	23	5315828	3.1	23	5316217	3.1	25
5313718	3.1	18	5315623	3.1	23	5315829	3.1	23	5316300	3.1	25
5313719	3.1	18	5315624	3.1	23	5315830	3.1	23	5316301	3.1	25
5313720	3.1	18	5315625	3.1	23	5315831	3.1	23	5316302	3.1	25
5313721	3.1	18	5315626	3.1	23	5315832	3.1	23	5316303	3.1	25
5313722	3.1	18	5315627	3.1	23	5315833	3.1	23	5316304	3.1	25
5313723	3.1	18	5315628	3.1	23	5315834	3.1	23	5316305	3.1	25
5313724	3.1	18	5315629	3.1	23	5315835	3.1	23	5316306	3.1	25
5313725	3.1	18	5315630	3.1	23	5315836	3.1	23	5316307	3.1	25
5313726	3.1	18	5315631	3.1	23	5315837	3.1	23	5316308	3.1	25
5313727	3.1	18	5315632	3.1	23	5315838	3.1	23	5316309	3.1	25
5313728	3.1	18	5315633	3.1	23	5315839	3.1	23	5316310	3.1	25
5313729	3.1	18	5315634	3.1	23	5315840	3.1	23	5316311	3.1	25
5315110	3.1	23	5315635	3.1	23	5315841	3.1	23	5316312	3.1	25
5315111	3.1	23	5315636	3.1	23	5315842	3.1	23	5316313	3.1	25
5315112	3.1	23	5315637	3.1	23	5315850	3.1	24	5316400	3.1	25
5315113	3.1	23	5315638	3.1	23	5315851	3.1	24	5316401	3.1	25
5315114	3.1	23	5315639	3.1	23	5315852	3.1	24	5316402	3.1	26
5315130	3.1	23	5315640	3.1	23	5315853	3.1	24	5316403	3.1	26
5315160	3.1	24	5315641	3.1	23	5315854	3.1	24	5316404	3.1	26
5315210	3.1	24	5315642	3.1	23	5315855	3.1	24	5316405	3.1	26
5315211	3.1	24	5315650	3.1	24	5315856	3.1	24	5316406	3.1	26
5315212	3.1	24	5315651	3.1	24	5315857	3.1	24	5316407	3.1	26
5315213	3.1	24	5315652	3.1	24	5315858	3.1	24	5316408	3.1	26
5315214	3.1	24	5315653	3.1	24	5315859	3.1	24	5316409	3.1	26
5315215	3.1	24	5315654	3.1	24	5315860	3.1	24	5316410	3.1	26
5315216	3.1	24	5315655	3.1	24	5315861	3.1	24	5316411	3.1	26
5315217	3.1	24	5315656	3.1	24	5315862	3.1	24	5316412	3.1	26
5315218	3.1	24	5315658	3.1	24	5315863	3.1	24	5316413	3.1	26
5315219	3.1	24	5315659	3.1	24	5315864	3.1	24	5316414	3.1	26
5315220	3.1	24	5315660	3.1	24	5315865	3.1	24	5316415	3.1	26
5315221	3.1	24	5315661	3.1	24	5315866	3.1	24	5316416	3.1	26
5315222	3.1	24	5315662	3.1	24	5315867	3.1	24	5316417	3.1	26
5315289	3.1	24	5315663	3.1	24	5315868	3.1	24	5318100	3.1	25
5315290	3.1	24	5315664	3.1	24	5315869	3.1	24	5318101	3.1	25
5315292	3.1	24	5315665	3.1	24	5315870	3.1	24	5318102	3.1	25
5315293	3.1	24	5315666	3.1	24	5315871	3.1	24	5318103	3.1	25
5315294	3.1	24	5315667	3.1	24	5315872	3.1	24	5318104	3.1	25
5315295	3.1	24	5315668	3.1	24	5315873	3.1	24	5318200	3.1	25
5315296	3.1	24	5315669	3.1	24	5315874	3.1	24	5318201	3.1	25
5315297	3.1	24	5315670	3.1	24	5315875	3.1	24	5318202	3.1	25
5315500	3.1	23	5315671	3.1	24	5315876	3.1	24	5318203	3.1	25
5315501	3.1	23	5315672	3.1	24	5315877	3.1	24	5318204	3.1	25
5315502	3.1	23	5315673	3.1	24	5315878	3.1	24	5318205	3.1	25

Broj artikla Art. no.	poglavlje chapter	stranica page	Broj artikla Art. no.	poglavlje chapter	stranica page	Broj artikla Art. no.	poglavlje chapter	stranica page	Broj artikla Art. no.	poglavlje chapter	stranica page
5318206	3.1	25	5318538	3.4	111	5318665	3.4	110	5320127	3.1	20
5318207	3.1	25	5318539	3.4	112	5318666	3.4	110	5320160	3.1	20
5318208	3.1	25	5318540	3.4	112	5318667	3.4	110	5320161	3.1	20
5318209	3.1	25	5318541	3.4	112	5318668	3.4	110	5320162	3.1	20
5318210	3.1	25	5318542	3.4	112	5318669	3.4	110	5320163	3.1	20
5318211	3.1	25	5318543	3.4	112	5318670	3.4	110	5320164	3.1	20
5318212	3.1	25	5318544	3.4	112	5318671	3.4	110	5320165	3.1	20
5318213	3.1	25	5318545	3.4	112	5318672	3.4	110	5320166	3.1	20
5318214	3.1	25	5318546	3.4	112	5318673	3.4	110	5320167	3.1	20
5318215	3.1	25	5318547	3.4	112	5318674	3.4	110	5320170	3.1	20
5318216	3.1	25	5318548	3.4	112	5318675	3.4	110	5320171	3.1	20
5318217	3.1	25	5318549	3.4	112	5318676	3.4	110	5320172	3.1	20
5318300	3.1	25	5318550	3.4	112	5318677	3.4	110	5320173	3.1	20
5318301	3.1	25	5318551	3.4	112	5318678	3.4	110	5320177	3.1	20
5318302	3.1	25	5318552	3.4	112	5318679	3.4	110	5320300	3.1	21
5318303	3.1	25	5318553	3.4	112	5318680	3.4	110	5320305	3.1	21
5318304	3.1	25	5318554	3.4	112	5318681	3.4	110	5320306	3.1	21
5318305	3.1	25	5318555	3.4	112	5318682	3.4	110	5320307	3.1	21
5318306	3.1	25	5318601	3.4	109	5318683	3.4	110	5320310	3.1	21
5318307	3.1	25	5318602	3.4	109	5318684	3.4	110	5320311	3.1	21
5318308	3.1	25	5318603	3.4	109	5318685	3.4	110	5320315	3.1	21
5318309	3.1	25	5318604	3.4	109	5318686	3.4	110	5320316	3.1	21
5318310	3.1	25	5318605	3.4	109	5318687	3.4	110	5320317	3.1	21
5318311	3.1	25	5318606	3.4	109	5318688	3.4	110	5320320	3.1	21
5318312	3.1	25	5318607	3.4	109	5318689	3.4	110	5320321	3.1	21
5318313	3.1	25	5318608	3.4	109	5318690	3.4	110	5320322	3.1	21
5318400	3.1	25	5318609	3.4	109	5318691	3.4	110	5320325	3.1	21
5318401	3.1	25	5318610	3.4	109	5318692	3.4	110	5320326	3.1	21
5318402	3.1	26	5318611	3.4	109	5318693	3.4	110	5320327	3.1	21
5318403	3.1	26	5318612	3.4	109	5318694	3.4	110	5320328	3.1	21
5318404	3.1	26	5318613	3.4	109	5318695	3.4	110	5320330	3.1	21
5318405	3.1	26	5318614	3.4	109	5318696	3.4	110	5320331	3.1	21
5318406	3.1	26	5318615	3.4	109	5318697	3.4	110	5320332	3.1	21
5318407	3.1	26	5318616	3.4	109	5318698	3.4	110	5320333	3.1	21
5318408	3.1	26	5318617	3.4	109	5318699	3.4	110	5320334	3.1	21
5318409	3.1	26	5318618	3.4	109	5318700	3.4	110	5320335	3.1	21
5318410	3.1	26	5318619	3.4	109	5318701	3.4	110	5320336	3.1	21
5318411	3.1	26	5318620	3.4	109	5318702	3.4	110	5320337	3.1	21
5318412	3.1	26	5318621	3.4	109	5318703	3.4	110	5320342	3.1	21
5318413	3.1	26	5318622	3.4	109	5320001	3.1	20	5320343	3.1	21
5318414	3.1	26	5318623	3.4	109	5320002	3.1	20	5320344	3.1	21
5318415	3.1	26	5318624	3.4	109	5320003	3.1	20	5320345	3.1	21
5318416	3.1	26	5318625	3.4	109	5320004	3.1	20	5320351	3.1	21
5318417	3.1	26	5318626	3.4	109	5320005	3.1	20	5320355	3.1	21
5318501	3.4	111	5318627	3.4	109	5320006	3.1	20	5320360	3.1	21
5318502	3.4	111	5318628	3.4	109	5320007	3.1	20	5320361	3.1	21
5318503	3.4	111	5318629	3.4	109	5320008	3.1	20	5320365	3.1	21
5318504	3.4	111	5318630	3.4	109	5320009	3.1	20	5320366	3.1	21
5318505	3.4	111	5318631	3.4	109	5320051	3.1	20	5320370	3.1	21
5318506	3.4	111	5318632	3.4	109	5320052	3.1	20	5320371	3.1	21
5318507	3.4	111	5318633	3.4	109	5320053	3.1	20	5320375	3.1	21
5318508	3.4	111	5318634	3.4	109	5320054	3.1	20	5320376	3.1	21
5318509	3.4	111	5318635	3.4	109	5320055	3.1	20	5320380	3.1	21
5318510	3.4	111	5318636	3.4	109	5320056	3.1	20	5320381	3.1	21
5318511	3.4	111	5318637	3.4	109	5320057	3.1	20	5320382	3.1	21
5318512	3.4	111	5318639	3.4	109	5320058	3.1	20	5320383	3.1	21
5318513	3.4	111	5318640	3.4	110	5320059	3.1	20	5320384	3.1	21
5318514	3.4	111	5318641	3.4	110	5320071	3.1	20	5320385	3.1	21
5318515	3.4	111	5318642	3.4	110	5320072	3.1	20	5320386	3.1	21
5318516	3.4	111	5318643	3.4	110	5320073	3.1	20	5320387	3.1	21
5318517	3.4	111	5318644	3.4	110	5320074	3.1	20	5320390	3.1	21
5318518	3.4	111	5318645	3.4	110	5320075	3.1	20	5320393	3.1	21
5318519	3.4	111	5318646	3.4	110	5320076	3.1	20	5320394	3.1	21
5318520	3.4	111	5318647	3.4	110	5320091	3.1	20	5320396	3.1	21
5318521	3.4	111	5318648	3.4	110	5320092	3.1	20	5320397	3.1	21
5318522	3.4	111	5318649	3.4	110	5320093	3.1	20	5320500	3.1	21
5318523	3.4	111	5318650	3.4	110	5320094	3.1	20	5320505	3.1	21
5318524	3.4	111	5318651	3.4	110	5320095	3.1	20	5320506	3.1	21
5318525	3.4	111	5318652	3.4	110	5320096	3.1	20	5320507	3.1	21
5318526	3.4	111	5318653	3.4	110	5320100	3.1	20	5320510	3.1	21
5318527	3.4	111	5318654	3.4	110	5320101	3.1	20	5320511	3.1	21
5318528	3.4	111	5318655	3.4	110	5320102	3.1	20	5320515	3.1	21
5318529	3.4	111	5318656	3.4	110	5320103	3.1	20	5320516	3.1	21
5318530	3.4	111	5318657	3.4	110	5320104	3.1	20	5320517	3.1	21
5318531	3.4	111	5318658	3.4	110	5320105	3.1	20	5320520	3.1	21
5318532	3.4	111	5318659	3.4	110	5320106	3.1	20	5320521	3.1	21
5318533	3.4	111	5318660	3.4	110	5320107	3.1	20	5320522	3.1	21
5318534	3.4	111	5318661	3.4	110	5320120	3.1	20	5320525	3.1	21
5318535	3.4	111	5318662	3.4	110	5320121	3.1	20	5320526	3.1	21
5318536	3.4	111	5318663	3.4	110	5320122	3.1	20	5320527	3.1	21
5318537	3.4	111	5318664	3.4	110	5320123	3.1	20	5320528	3.1	21

Broj artikla	poglavlje	stranica	Broj artikla	poglavlje	stranica	Broj artikla	poglavlje	stranica	Broj artikla	poglavlje	stranica
Art. no.	chapter	page	Art. no.	chapter	page	Art. no.	chapter	page	Art. no.	chapter	page
5320530	3.1	21	5320771	3.1	22	5320885	3.1	22	5321887	3.4	107
5320531	3.1	21	5320772	3.1	22	5320886	3.1	22	5321888	3.4	107
5320532	3.1	21	5320773	3.1	22	5320887	3.1	22	5321890	3.4	107
5320533	3.1	21	5320774	3.1	22	5320888	3.1	22	5321891	3.4	107
5320534	3.1	21	5320775	3.1	22	5320890	3.1	22	5330012	3.1	27
5320535	3.1	21	5320776	3.1	22	5320891	3.1	22	5330016	3.1	27
5320536	3.1	21	5320777	3.1	22	5320892	3.1	22	5330020	3.1	27
5320537	3.1	21	5320780	3.1	22	5320893	3.1	22	5330021	3.1	27
5320542	3.1	21	5320781	3.1	22	5320894	3.1	22	5330025	3.1	27
5320543	3.1	21	5320782	3.1	22	5320895	3.1	22	5330032	3.1	27
5320544	3.1	21	5320783	3.1	22	5320896	3.1	22	5330216	3.1	27
5320545	3.1	21	5320784	3.1	22	5321701	3.4	108	5330220	3.1	27
5320551	3.1	21	5320785	3.1	22	5321702	3.4	108	5330221	3.1	27
5320555	3.1	21	5320786	3.1	22	5321703	3.4	108	5330225	3.1	27
5320560	3.1	21	5320787	3.1	22	5321704	3.4	108	5330232	3.1	27
5320561	3.1	21	5320788	3.1	22	5321705	3.4	108	5507050	3.4	105
5320565	3.1	21	5320790	3.1	22	5321706	3.4	108	5507051	3.4	105
5320566	3.1	21	5320791	3.1	22	5321707	3.4	108	5507052	3.4	105
5320570	3.1	21	5320792	3.1	22	5321708	3.4	108	5507053	3.4	105
5320571	3.1	21	5320793	3.1	22	5321709	3.4	108	5507054	3.4	105
5320575	3.1	21	5320794	3.1	22	5321710	3.4	108	5507055	3.4	105
5320576	3.1	21	5320795	3.1	22	5321711	3.4	108	5507150	3.4	105
5320580	3.1	21	5320796	3.1	22	5321712	3.4	108	5507151	3.4	105
5320581	3.1	21	5320800	3.1	22	5321713	3.4	108	5507152	3.4	105
5320582	3.1	21	5320801	3.1	22	5321714	3.4	108	5507153	3.4	105
5320583	3.1	21	5320802	3.1	22	5321715	3.4	108	5507154	3.4	105
5320584	3.1	21	5320803	3.1	22	5321716	3.4	108	5507155	3.4	105
5320585	3.1	21	5320804	3.1	22	5321717	3.4	108	5507156	3.4	105
5320586	3.1	21	5320805	3.1	22	5321718	3.4	108	5507157	3.4	105
5320587	3.1	21	5320806	3.1	22	5321719	3.4	108	5507158	3.4	105
5320590	3.1	21	5320807	3.1	22	5321720	3.4	108	5507250	3.4	105
5320593	3.1	21	5320808	3.1	22	5321721	3.4	108	5507251	3.4	105
5320594	3.1	21	5320810	3.1	22	5321722	3.4	108	5507252	3.4	105
5320596	3.1	21	5320815	3.1	22	5321723	3.4	108	5507253	3.4	105
5320597	3.1	21	5320816	3.1	22	5321724	3.4	108	5507254	3.4	105
5320700	3.1	22	5320817	3.1	22	5321725	3.4	108	5507360	3.4	105
5320701	3.1	22	5320818	3.1	22	5321726	3.4	108	5507361	3.4	105
5320702	3.1	22	5320820	3.1	22	5321727	3.4	108	5507362	3.4	105
5320703	3.1	22	5320821	3.1	22	5321801	3.4	106	5507363	3.4	105
5320704	3.1	22	5320822	3.1	22	5321802	3.4	106	5507364	3.4	105
5320705	3.1	22	5320823	3.1	22	5321803	3.4	106	5507365	3.4	105
5320706	3.1	22	5320830	3.1	22	5321804	3.4	106	5507366	3.4	105
5320707	3.1	22	5320831	3.1	22	5321805	3.4	106	5507367	3.4	105
5320708	3.1	22	5320832	3.1	22	5321806	3.4	106	5507540	3.4	102
5320710	3.1	22	5320835	3.1	22	5321807	3.4	106	5507541	3.4	102
5320715	3.1	22	5320836	3.1	22	5321808	3.4	106	5507542	3.4	102
5320716	3.1	22	5320837	3.1	22	5321809	3.4	106	5507543	3.4	102
5320717	3.1	22	5320838	3.1	22	5321810	3.4	106	5507544	3.4	102
5320718	3.1	22	5320840	3.1	22	5321811	3.4	106	5507545	3.4	102
5320720	3.1	22	5320841	3.1	22	5321812	3.4	106	5507546	3.4	102
5320721	3.1	22	5320842	3.1	22	5321813	3.4	106	5507547	3.4	102
5320722	3.1	22	5320843	3.1	22	5321814	3.4	106	5507548	3.4	102
5320723	3.1	22	5320845	3.1	22	5321815	3.4	106	5507549	3.4	102
5320730	3.1	22	5320846	3.1	22	5321816	3.4	106	5507550	3.4	102
5320731	3.1	22	5320847	3.1	22	5321817	3.4	106	5507560	3.4	103
5320732	3.1	22	5320848	3.1	22	5321818	3.4	106	5507561	3.4	103
5320735	3.1	22	5320849	3.1	22	5321819	3.4	106	5507562	3.4	103
5320736	3.1	22	5320850	3.1	22	5321820	3.4	106	5507563	3.4	103
5320737	3.1	22	5320851	3.1	22	5321821	3.4	106	5507564	3.4	103
5320738	3.1	22	5320852	3.1	22	5321822	3.4	106	5507565	3.4	103
5320740	3.1	22	5320853	3.1	22	5321823	3.4	106	5507566	3.4	103
5320741	3.1	22	5320855	3.1	22	5321824	3.4	106	5507567	3.4	103
5320742	3.1	22	5320856	3.1	22	5321825	3.4	106	5507568	3.4	103
5320743	3.1	22	5320857	3.1	22	5321865	3.4	107	5507569	3.4	103
5320745	3.1	22	5320858	3.1	22	5321866	3.4	107	5507570	3.4	103
5320746	3.1	22	5320859	3.1	22	5321867	3.4	107	5507640	3.4	102
5320747	3.1	22	5320860	3.1	22	5321868	3.4	107	5507641	3.4	102
5320748	3.1	22	5320861	3.1	22	5321869	3.4	107	5507642	3.4	102
5320749	3.1	22	5320870	3.1	22	5321870	3.4	107	5507643	3.4	102
5320750	3.1	22	5320871	3.1	22	5321871	3.4	107	5507644	3.4	102
5320751	3.1	22	5320872	3.1	22	5321872	3.4	107	5507645	3.4	102
5320752	3.1	22	5320873	3.1	22	5321873	3.4	107	5507646	3.4	102
5320753	3.1	22	5320874	3.1	22	5321874	3.4	107	5507647	3.4	102
5320755	3.1	22	5320875	3.1	22	5321875	3.4	107	5507648	3.4	102
5320756	3.1	22	5320876	3.1	22	5321880	3.4	107	5507649	3.4	102
5320757	3.1	22	5320877	3.1	22	5321881	3.4	107	5507650	3.4	102
5320758	3.1	22	5320880	3.1	22	5321882	3.4	107	5507660	3.4	103
5320759	3.1	22	5320881	3.1	22	5321883	3.4	107	5507661	3.4	103
5320760	3.1	22	5320882	3.1	22	5321884	3.4	107	5507662	3.4	103
5320761	3.1	22	5320883	3.1	22	5321885	3.4	107	5507663	3.4	103
5320770	3.1	22	5320884	3.1	22	5321886	3.4	107	5507664	3.4	103

Broj artikla	poglavlje	stranica	Broj artikla	poglavlje	stranica	Broj artikla	poglavlje	stranica	Broj artikla	poglavlje	stranica
Art. no.	chapter	page	Art. no.	chapter	page	Art. no.	chapter	page	Art. no.	chapter	page
5507665	3.4	103	6004756	3.3	61	6102182	3.3	68	6104763	3.3	71
5507666	3.4	103	6004757	3.3	61	6102190	3.3	68	6104764	3.3	71
5507667	3.4	103	6004758	3.3	61	6102204	3.3	68	6104770	3.3	71
5507668	3.4	103	6008207	3.3	64	6102212	3.3	68	6104771	3.3	71
5507669	3.4	103	6008209	3.3	64	6102220	3.3	68	6104772	3.3	71
5507670	3.4	103	6008211	3.3	64	6102239	3.3	68	6104773	3.3	71
5507740	3.4	104	6008213	3.3	64	6102241	3.3	68	6104774	3.3	71
5507741	3.4	104	6008216	3.3	64	6102247	3.3	68	6104775	3.3	71
5507742	3.4	104	6008221	3.3	64	6102255	3.3	68	6104776	3.3	71
5507743	3.4	104	6008229	3.3	64	6102258	3.3	68	6104777	3.3	71
5507760	3.4	104	6008236	3.3	64	6102300	3.3	68	6104778	3.3	71
5507761	3.4	104	6008242	3.3	64	6102310	3.3	68	6104779	3.3	71
5507762	3.4	104	6008248	3.3	64	6102311	3.3	68	6104780	3.3	71
5507763	3.4	104	6010112	3.3	64	6102320	3.3	68	6104816	3.3	72
6000070	3.3	61	6010116	3.3	64	6102321	3.3	68	6104817	3.3	72
6000070	3.4	142	6010120	3.3	64	6102322	3.3	68	6104818	3.3	72
6000096	3.3	61	6010125	3.3	64	6102330	3.3	68	6104819	3.3	72
6000096	3.4	142	6010132	3.3	64	6102331	3.3	68	6104820	3.3	72
6000118	3.3	61	6010140	3.3	64	6102332	3.3	68	6104821	3.3	72
6000118	3.4	142	6010150	3.3	64	6102333	3.3	68	6104824	3.3	72
6000134	3.3	61	6010163	3.3	64	6102340	3.3	68	6104825	3.3	72
6000134	3.4	142	6011007	3.3	63	6102341	3.3	68	6104826	3.3	72
6000169	3.3	61	6011009	3.3	63	6102342	3.3	68	6104830	3.3	72
6000169	3.4	142	6011011	3.3	63	6102350	3.3	68	6104831	3.3	72
6000215	3.3	61	6011013	3.3	63	6102351	3.3	68	6104832	3.3	72
6000215	3.4	142	6011016	3.3	63	6102352	3.3	68	6104833	3.3	72
6000290	3.3	61	6011021	3.3	63	6102360	3.3	68	6104838	3.3	72
6000290	3.4	142	6011029	3.3	63	6102361	3.3	68	6104839	3.3	72
6000363	3.3	61	6011036	3.3	63	6102370	3.3	68	6104840	3.3	72
6000363	3.4	142	6011042	3.3	63	6102371	3.3	68	6104849	3.3	72
6000428	3.3	61	6011048	3.3	63	6102380	3.3	68	6104850	3.3	72
6000428	3.4	142	6011112	3.3	63	6102381	3.3	68	6104862	3.3	72
6000487	3.3	61	6011116	3.3	63	6102400	3.3	69	6104863	3.3	72
6000487	3.4	142	6011120	3.3	63	6102404	3.3	69	6104875	3.3	72
6002005	3.3	62	6011125	3.3	63	6102405	3.3	69	6105010	3.4	147
6002006	3.3	62	6011132	3.3	63	6102409	3.3	69	6105011	3.4	147
6002007	3.3	62	6011140	3.3	63	6102410	3.3	69	6105012	3.4	147
6002008	3.3	62	6011150	3.3	63	6102413	3.3	69	6105013	3.4	147
6002010	3.3	62	6011163	3.3	63	6102414	3.3	69	6105014	3.4	147
6002011	3.3	62	6100015	3.3	70	6102415	3.3	69	6105015	3.4	147
6002012	3.3	62	6100023	3.3	70	6102419	3.3	69	6105016	3.4	147
6004067	3.3	61	6100031	3.3	70	6102420	3.3	69	6105017	3.4	147
6004083	3.3	61	6100040	3.3	70	6102424	3.3	69	6105018	3.4	147
6004105	3.3	61	6100058	3.3	70	6102425	3.3	69	6105019	3.4	147
6004121	3.3	61	6100066	3.3	70	6102429	3.3	69	6105020	3.4	147
6004121	3.4	102	6100074	3.3	70	6102430	3.3	69	6105021	3.4	147
6004121	3.4	103	6100082	3.3	70	6102435	3.3	69	6105022	3.4	147
6004121	3.4	142	6100090	3.3	70	6102450	3.3	69	6105023	3.4	147
6004164	3.3	61	6100104	3.3	70	6102455	3.3	69	6105024	3.4	147
6004164	3.4	102	6100112	3.3	70	6102460	3.3	69	6105025	3.4	147
6004164	3.4	103	6100120	3.3	70	6102464	3.3	69	6105026	3.4	147
6004164	3.4	142	6100139	3.3	70	6102465	3.3	69	6105027	3.4	147
6004165	3.3	61	6100147	3.3	70	6102468	3.3	69	6105028	3.4	147
6004202	3.3	61	6100155	3.3	70	6102469	3.3	69	6105040	3.4	147
6004202	3.4	102	6100163	3.3	70	6102470	3.3	69	6105041	3.4	147
6004202	3.4	103	6100171	3.3	70	6102474	3.3	69	6105042	3.4	147
6004202	3.4	142	6100180	3.3	70	6102475	3.3	69	6105043	3.4	147
6004253	3.3	61	6100198	3.3	70	6102479	3.3	69	6105044	3.4	147
6004253	3.4	102	6100201	3.3	70	6102480	3.3	69	6105045	3.4	147
6004253	3.4	142	6100210	3.3	70	6102484	3.3	69	6105046	3.4	147
6004253	3.4	103	6100333	5.2	45	6102485	3.3	69	6105047	3.4	147
6004326	3.3	61	6100416	3.3	72	6102490	3.3	69	6105048	3.4	147
6004326	3.4	102	6100421	3.3	72	6104106	3.3	69	6105049	3.4	147
6004326	3.4	103	6100429	3.3	72	6104108	3.3	69	6105050	3.4	147
6004326	3.4	142	6102018	3.3	68	6104110	3.3	69	6105051	3.4	147
6004407	3.3	61	6102026	3.3	68	6104206	3.3	69	6105060	3.4	146
6004407	3.4	102	6102030	3.3	68	6104208	3.3	69	6105061	3.4	146
6004407	3.4	103	6102034	3.3	68	6104210	3.3	69	6105062	3.4	146
6004407	3.4	142	6102042	3.3	68	6104212	3.3	69	6105063	3.4	146
6004504	3.4	102	6102050	3.3	68	6104416	3.3	69	6105064	3.4	146
6004504	3.4	103	6102069	3.3	68	6104525	3.3	69	6105065	3.4	146
6004504	3.3	61	6102077	3.3	68	6104632	3.3	69	6105066	3.4	146
6004504	3.4	142	6102085	3.3	68	6104716	3.3	71	6105067	3.4	146
6004636	3.3	61	6102093	3.3	68	6104720	3.3	71	6105068	3.4	146
6004636	3.4	102	6102107	3.3	68	6104725	3.3	71	6105069	3.4	146
6004636	3.4	103	6102115	3.3	68	6104726	3.3	71	6105070	3.4	146
6004636	3.4	142	6102123	3.3	68	6104727	3.3	71	6105071	3.4	146
6004750	3.3	61	6102131	3.3	68	6104732	3.3	71	6105072	3.4	146
6004750	3.4	142	6102140	3.3	68	6104733	3.3	71	6105073	3.4	146
6004752	3.3	61	6102158	3.3	68	6104740	3.3	71	6105074	3.4	146
6004754	3.3	61	6102166	3.3	68	6104750	3.3	71	6105075	3.4	146

Broj artikla	poglavlje	stranica	Broj artikla	poglavlje	stranica	Broj artikla	poglavlje	stranica	Broj artikla	poglavlje	stranica
Art. no.	chapter	page	Art. no.	chapter	page	Art. no.	chapter	page	Art. no.	chapter	page
6105076	3.4	146	6200546	3.4	151	6402728	3.4	158	6500340	2.5	125
6105077	3.4	146	6200547	3.4	151	6402729	3.4	158	6500358	2.5	125
6105078	3.4	146	6200548	3.4	151	6402730	3.4	158	6500366	2.5	125
6105081	3.4	145	6300240	3.3	91	6402731	3.4	158	6500374	2.5	125
6105082	3.4	145	6300241	3.3	91	6402732	3.4	158	6500382	2.5	125
6105083	3.4	145	6300242	3.3	91	6402733	3.4	158	6500390	2.5	125
6105084	3.4	145	6300243	3.3	91	6402734	3.4	158	6500404	2.5	125
6105085	3.4	145	6300244	3.3	91	6402750	3.4	159	6500412	2.5	125
6105086	3.4	145	6303099	3.3	90	6402751	3.4	159	6500420	2.5	125
6105087	3.4	145	6303110	3.3	90	6402752	3.4	159	6500439	2.5	125
6105088	3.4	145	6303137	3.3	90	6402753	3.4	159	6500447	2.5	125
6200010	3.3	74	6303161	3.3	90	6402754	3.4	159	6500455	2.5	125
6200028	3.3	74	6303218	3.3	90	6402755	3.4	159	6500463	2.5	125
6200036	3.3	74	6303293	3.3	90	6402756	3.4	159	6500471	2.5	125
6200044	3.3	74	6303366	3.3	90	6402757	3.4	159	6500480	2.5	125
6200052	3.3	74	6303420	3.3	90	6402758	3.4	159	6500490	2.5	125
6200060	3.3	74	6303480	3.3	90	6402759	3.4	159	6500501	2.5	125
6200079	3.3	74	6303516	3.3	90	6402760	3.4	159	6600077	3.3	80
6200087	3.3	74	6303520	3.3	90	6402761	3.4	159	6600093	3.3	80
6200095	3.3	74	6303525	3.3	90	6402762	3.4	159	6600115	3.3	80
6200109	3.3	74	6303532	3.3	90	6402763	3.4	159	6600131	3.3	80
6200117	3.3	74	6303540	3.3	90	6402764	3.4	159	6600166	3.3	80
6200125	3.3	74	6303550	3.3	90	6402810	3.4	162	6600212	3.3	80
6200212	3.3	75	6303563	3.3	90	6402811	3.4	162	6600298	3.3	80
6200216	3.3	75	6402610	3.4	157	6402812	3.4	162	6600360	3.3	80
6200220	3.3	75	6402611	3.4	157	6402813	3.4	162	6600425	3.3	80
6200225	3.3	75	6402612	3.4	157	6402814	3.4	162	6600484	3.3	80
6200232	3.3	75	6402613	3.4	157	6402815	3.4	162	6600800	3.3	80
6200240	3.3	75	6402614	3.4	157	6402816	3.4	162	6600801	3.3	80
6200250	3.3	75	6402615	3.4	157	6402817	3.4	162	6600802	3.3	80
6200263	3.3	75	6402616	3.4	157	6402818	3.4	162	6600803	3.3	80
6200310	3.3	75	6402617	3.4	157	6402819	3.4	162	6600804	3.3	80
6200312	3.3	75	6402618	3.4	157	6402820	3.4	162	6600805	3.3	80
6200316	3.3	75	6402619	3.4	157	6402821	3.4	162	6600806	3.3	80
6200320	3.3	75	6402620	3.4	157	6402822	3.4	162	6600807	3.3	80
6200325	3.3	75	6402621	3.4	157	6402823	3.4	162	6604658	3.3	79
6200332	3.3	75	6402622	3.4	157	6402824	3.4	162	6604659	3.3	79
6200340	3.3	75	6402623	3.4	157	6402825	3.4	162	6604660	3.3	79
6200350	3.3	75	6402624	3.4	157	6402826	3.4	162	6604661	3.3	79
6200363	3.3	75	6402625	3.4	157	6402827	3.4	162	6604662	3.3	79
6200410	3.3	75	6402626	3.4	157	6402828	3.4	162	6604663	3.3	79
6200412	3.3	75	6402627	3.4	157	6402829	3.4	162	6604664	3.3	79
6200416	3.3	75	6402640	3.4	161	6402830	3.4	162	6604665	3.3	79
6200420	3.3	75	6402641	3.4	161	6402831	3.4	162	6604666	3.3	79
6200425	3.3	75	6402642	3.4	161	6402850	3.4	160	6604667	3.3	79
6200432	3.3	75	6402643	3.4	161	6402851	3.4	160	6604668	3.3	79
6200440	3.3	75	6402644	3.4	161	6402852	3.4	160	6604669	3.3	79
6200450	3.3	75	6402645	3.4	161	6402853	3.4	160	6604670	3.3	79
6200463	3.3	75	6402646	3.4	161	6402854	3.4	160	6604671	3.3	79
6200501	3.4	152	6402647	3.4	161	6402855	3.4	160	6604672	3.3	79
6200502	3.4	152	6402648	3.4	161	6402856	3.4	160	6604673	3.3	79
6200503	3.4	152	6402649	3.4	161	6402857	3.4	160	6604674	3.3	79
6200504	3.4	152	6402650	3.4	161	6402858	3.4	160	6604675	3.3	79
6200505	3.4	152	6402651	3.4	161	6402859	3.4	160	6604676	3.3	79
6200506	3.4	152	6402652	3.4	161	6402860	3.4	160	6604677	3.3	79
6200507	3.4	152	6402653	3.4	161	6402861	3.4	160	6604678	3.3	79
6200508	3.4	152	6402654	3.4	161	6500072	2.5	125	6604679	3.3	79
6200509	3.4	152	6402655	3.4	161	6500102	2.5	125	6604680	3.3	79
6200510	3.4	152	6402656	3.4	161	6500110	2.5	125	6604681	3.3	79
6200512	3.4	152	6402657	3.4	161	6500129	2.5	125	6604682	3.3	79
6200513	3.4	152	6402658	3.4	161	6500137	2.5	125	6604683	3.3	79
6200514	3.4	152	6402659	3.4	161	6500145	2.5	125	6604684	3.3	79
6200515	3.4	152	6402660	3.4	161	6500153	2.5	125	6604685	3.3	79
6200516	3.4	152	6402710	3.4	158	6500161	2.5	125	6604686	3.3	79
6200517	3.4	152	6402711	3.4	158	6500170	2.5	125	6604687	3.3	79
6200518	3.4	152	6402712	3.4	158	6500188	2.5	125	6604688	3.3	79
6200520	3.4	150	6402713	3.4	158	6500196	2.5	125	6604689	3.3	79
6200521	3.4	150	6402714	3.4	158	6500200	2.5	125	6604690	3.3	79
6200522	3.4	150	6402715	3.4	158	6500218	2.5	125	6604691	3.3	79
6200523	3.4	150	6402716	3.4	158	6500226	2.5	125	6604692	3.3	79
6200524	3.4	150	6402717	3.4	158	6500234	2.5	125	6604693	3.3	79
6200525	3.4	150	6402718	3.4	158	6500242	2.5	125	6604694	3.3	79
6200526	3.4	150	6402719	3.4	158	6500250	2.5	125	6604695	3.3	79
6200527	3.4	150	6402720	3.4	158	6500269	2.5	125	6604703	3.3	79
6200528	3.4	150	6402721	3.4	158	6500277	2.5	125	6604704	3.3	79
6200529	3.4	150	6402722	3.4	158	6500285	2.5	125	6604705	3.3	79
6200541	3.4	151	6402723	3.4	158	6500293	2.5	125	6604706	3.3	79
6200542	3.4	151	6402724	3.4	158	6500307	2.5	125	6604707	3.3	79
6200543	3.4	151	6402725	3.4	158	6500315	2.5	125	6604708	3.3	79
6200544	3.4	151	6402726	3.4	158	6500323	2.5	125	6604709	3.3	79
6200545	3.4	151	6402727	3.4	158	6500331	2.5	125	6604712	3.3	79

Broj artikla	poglavlje	stranica	Broj artikla	poglavlje	stranica	Broj artikla	poglavlje	stranica	Broj artikla	poglavlje	stranica
Art. no.	chapter	page	Art. no.	chapter	page	Art. no.	chapter	page	Art. no.	chapter	page
6604713	3.3	79	6606369	3.3	77	6702946	3.4	156	7005075	5.3	56
6604715	3.3	79	6606423	3.3	77	6702947	3.4	156	7005083	3.3	65
6604716	3.3	79	6606482	3.3	77	6702948	3.4	156	7005083	5.3	56
6604717	3.3	79	6700071	3.3	86	6702949	3.4	156	7005091	3.3	65
6604719	3.3	79	6700098	3.3	86	6702950	3.4	156	7005091	5.3	56
6604720	3.3	79	6700110	3.3	86	7001070	5.3	57	7005105	3.3	65
6604721	3.3	79	6700136	3.3	86	7001096	5.1	4	7005113	3.3	65
6604722	3.3	79	6700160	3.3	86	7001096	5.1	8	7005121	3.3	65
6604723	3.3	79	6700217	3.3	86	7001096	5.3	57	7005130	3.3	65
6604724	3.3	79	6700292	3.3	86	7001118	5.1	4	7005148	3.3	65
6604725	3.3	79	6700365	3.3	86	7001118	5.1	8	7005156	3.3	65
6604726	3.3	79	6700420	3.3	86	7001118	5.3	57	7005164	3.3	65
6604727	3.3	79	6700489	3.3	86	7001134	5.3	57	7005172	3.3	65
6604728	3.3	79	6700507	3.3	87	7001169	5.1	4	7005180	3.3	65
6604729	3.3	79	6700509	3.3	87	7001169	5.1	8	7005199	3.3	65
6604730	3.3	79	6700511	3.3	87	7001169	5.3	57	7005202	3.3	65
6604732	3.3	79	6700513	3.3	87	7001215	5.1	4	7005202	5.3	56
6604733	3.3	79	6700516	3.3	87	7001215	5.1	8	7005210	3.3	65
6604734	3.3	79	6700521	3.3	87	7001215	5.3	57	7005210	5.3	56
6604735	3.3	79	6700529	3.3	87	7001290	5.1	4	7005229	3.3	65
6604740	3.3	79	6700536	3.3	87	7001290	5.3	57	7005237	3.3	65
6604741	3.3	79	6700542	3.3	87	7001363	5.3	57	7005245	3.3	65
6604742	3.3	79	6700548	3.3	87	7001428	5.3	57	7005301	3.3	66
6604743	3.3	79	6700612	3.3	87	7001487	5.3	57	7005302	3.3	66
6604750	3.3	79	6700616	3.3	87	7002076	3.3	84	7005303	3.3	66
6604751	3.3	79	6700620	3.3	87	7002092	3.3	84	7005304	3.3	66
6604752	3.3	79	6700625	3.3	87	7002114	3.3	84	7005305	3.3	66
6604753	3.3	79	6700632	3.3	87	7002130	3.3	84	7005306	3.3	66
6604763	3.3	79	6700640	3.3	87	7002165	3.3	84	7005307	3.3	66
6604764	3.3	79	6700650	3.3	87	7002211	3.3	84	7005308	3.3	66
6604770	3.3	76	6700663	3.3	87	7002297	3.3	84	7005309	3.3	66
6604771	3.3	76	6701108	3.3	86	7002360	3.3	84	7005310	3.3	66
6604772	3.3	76	6701116	3.3	86	7002424	3.3	84	7005311	3.3	66
6604773	3.3	76	6701124	3.3	86	7002483	3.3	84	7005312	3.3	66
6604774	3.3	76	6701140	3.3	86	7004200	3.3	73	7005313	3.3	66
6604775	3.3	76	6701205	3.3	86	7004201	3.3	73	7005314	3.3	66
6604776	3.3	76	6701345	3.3	86	7004202	3.3	73	7005315	3.3	66
6604777	3.3	76	6701388	3.3	86	7004203	3.3	73	7005317	3.3	66
6604807	3.3	78	6701582	3.3	86	7004204	3.3	73	7005318	3.3	66
6604808	3.3	78	6701612	3.3	86	7004205	3.3	73	7005319	3.3	66
6604809	3.3	78	6701616	3.3	86	7004206	3.3	73	7005320	3.3	66
6604810	3.3	78	6701620	3.3	86	7004207	3.3	73	7005321	3.3	66
6604811	3.3	78	6701625	3.3	86	7004208	3.3	73	7005322	3.3	66
6604812	3.3	78	6701632	3.3	86	7004300	3.3	73	7005323	3.3	66
6604813	3.3	78	6701640	3.3	86	7004301	3.3	73	7005324	3.3	66
6604814	3.3	78	6701650	3.3	86	7004302	3.3	73	7006012	3.3	99
6604815	3.3	78	6701663	3.3	86	7004303	3.3	73	7006020	3.3	99
6604816	3.3	78	6702610	3.4	155	7004304	3.3	73	7006039	3.3	99
6604817	3.3	78	6702611	3.4	155	7004305	3.3	73	7006047	3.3	99
6604818	3.3	78	6702612	3.4	155	7004306	3.3	73	7006055	3.3	99
6604819	3.3	78	6702613	3.4	155	7004310	3.3	73	7006063	3.3	99
6604820	3.3	78	6702614	3.4	155	7004311	3.3	73	7006071	3.3	99
6604821	3.3	78	6702615	3.4	155	7004312	3.3	73	7006080	3.3	99
6604822	3.3	78	6702616	3.4	155	7004313	3.3	73	7006098	3.3	99
6604823	3.3	78	6702617	3.4	155	7004314	3.3	73	7006101	3.3	99
6604829	3.3	78	6702618	3.4	155	7004315	3.3	73	7006207	3.3	99
6604830	3.3	78	6702651	3.4	155	7004316	3.3	73	7006209	3.3	99
6604831	3.3	78	6702652	3.4	155	7004320	3.3	73	7006211	3.3	99
6604832	3.3	78	6702653	3.4	155	7004321	3.3	73	7006213	3.3	99
6604836	3.3	78	6702654	3.4	155	7004322	3.3	73	7006216	3.3	99
6604837	3.3	78	6702655	3.4	155	7004323	3.3	73	7006229	3.3	99
6604842	3.3	78	6702656	3.4	155	7004324	3.3	73	7006236	3.3	99
6604843	3.3	78	6702657	3.4	155	7004325	3.3	73	7006242	3.3	99
6604848	3.3	78	6702661	3.4	155	7004326	3.3	73	7006248	3.3	99
6604849	3.3	78	6702662	3.4	155	7004401	3.4	149	7006251	3.3	99
6604850	3.3	78	6702663	3.4	155	7004402	3.4	149	7006252	3.3	99
6604863	3.3	78	6702664	3.4	155	7004403	3.4	149	7006253	3.3	99
6604865	3.3	78	6702835	3.3	88	7004404	3.4	149	7006254	3.3	99
6604869	3.3	78	6702836	3.3	88	7005016	3.3	65	7006255	3.3	99
6604872	3.3	78	6702837	3.3	88	7005016	5.3	56	7006257	3.3	99
6604875	3.3	78	6702838	3.3	88	7005024	3.3	65	7006258	3.3	99
6604877	3.3	78	6702839	3.3	88	7005024	5.3	56	7006259	3.3	99
6604879	3.3	78	6702840	3.3	88	7005032	3.3	65	7006812	3.3	92
6604882	3.3	78	6702850	3.3	88	7005032	5.3	56	7006816	3.3	92
6606075	3.3	77	6702863	3.3	88	7005040	3.3	65	7006820	3.3	92
6606091	3.3	77	6702940	3.4	156	7005040	5.3	56	7006825	3.3	92
6606113	3.3	77	6702941	3.4	156	7005059	3.3	65	7006832	3.3	92
6606130	3.3	77	6702942	3.4	156	7005059	5.3	56	7006840	3.3	92
6606164	3.3	77	6702943	3.4	156	7005067	3.3	65	7006850	3.3	92
6606210	3.3	77	6702944	3.4	156	7005067	5.3	56	7006863	3.3	92
6606296	3.3	77	6702945	3.4	156	7005075	3.3	65	7006870	3.3	92

Broj artikla	poglavlje	stranica	Broj artikla	poglavlje	stranica	Broj artikla	poglavlje	stranica	Broj artikla	poglavlje	stranica
Art. no.	chapter	page	Art. no.	chapter	page	Art. no.	chapter	page	Art. no.	chapter	page
7006871	3.3	92	7008804	3.4	144	7211969	3.3	60	7218228	3.4	148
7006872	3.3	92	7008805	3.4	144	7211970	3.3	60	7218262	3.4	143
7006873	3.3	92	7008806	3.4	144	7211971	3.3	60	7218263	3.4	143
7006874	3.3	92	7008807	3.4	144	7211972	3.3	60	7218264	3.4	143
7006875	3.3	92	7008808	3.4	144	7211973	3.3	60	7218265	3.4	143
7006876	3.3	92	7008809	3.4	144	7211974	3.3	60	7218266	3.4	143
7006877	3.3	92	7008810	3.4	144	7211975	3.3	60	7218267	3.4	143
7006880	3.3	92	7008811	3.4	144	7211976	3.3	60	7218268	3.4	143
7006881	3.3	92	7008812	3.4	144	7211977	3.3	60	7302096	3.3	89
7006882	3.3	92	7008813	3.4	144	7211978	3.3	60	7302118	3.3	89
7006883	3.3	92	7008814	3.4	144	7211979	3.3	60	7302134	3.3	89
7006884	3.3	92	7008815	3.4	144	7211980	3.3	60	7302169	3.3	89
7006885	3.3	92	7211485	3.3	60	7211981	3.3	60	7302215	3.3	89
7006886	3.3	92	7211486	3.3	60	7211982	3.3	60	7302290	3.3	89
7006887	3.3	92	7211487	3.3	60	7211983	3.3	60	7302363	3.3	89
7007080	3.4	154	7211488	3.3	60	7211984	3.3	60	7302416	3.3	89
7007081	3.4	154	7211490	3.3	60	7211985	3.3	60	7302420	3.3	89
7007082	3.4	154	7211491	3.3	60	7211986	3.3	60	7302425	3.3	89
7007083	3.4	154	7211492	3.3	60	7211987	3.3	60	7302432	3.3	89
7007084	3.4	154	7211493	3.3	60	7211988	3.3	60	7302440	3.3	89
7007085	3.4	154	7211495	3.3	60	7211989	3.3	60	7302450	3.3	89
7007086	3.4	154	7211496	3.3	60	7211990	3.3	60	7304001	2.2	49
7007087	3.4	154	7211497	3.3	60	7211990	3.4	102	7304002	2.2	49
7007088	3.4	154	7211498	3.3	60	7211990	3.4	103	7304003	2.2	49
7008516	3.3	67	7211707	3.3	60	7211991	3.3	60	7304004	2.2	49
7008519	3.3	67	7211709	3.3	60	7211991	3.4	102	7304006	2.2	49
7008520	3.3	67	7211711	3.3	60	7211991	3.4	103	7304008	2.2	49
7008523	3.3	67	7211713	3.3	60	7211992	3.3	60	7304011	2.2	49
7008524	3.3	67	7211716	3.3	60	7211992	3.4	102	7304015	2.2	49
7008525	3.3	67	7211721	3.3	60	7211992	3.4	103	7304016	2.2	49
7008530	3.3	67	7211729	3.3	60	7215517	3.3	85	7304017	2.2	49
7008531	3.3	67	7211751	3.3	60	7215525	3.3	85	7304021	2.2	49
7008532	3.3	67	7211752	3.3	60	7215533	3.3	85	7304116	2.2	49
7008538	3.3	67	7211753	3.3	60	7215541	3.3	85	7304117	2.2	49
7008539	3.3	67	7211754	3.3	60	7215550	3.3	85	7304118	2.2	49
7008540	3.3	67	7211755	3.3	60	7215568	3.3	85	7304119	2.2	49
7008548	3.3	67	7211756	3.3	60	7215576	3.3	85	7304120	2.2	49
7008549	3.3	67	7211757	3.3	60	7215584	3.3	85	7304121	2.2	49
7008550	3.3	67	7211765	3.3	60	7215592	3.3	85	7304125	2.2	49
7008561	3.3	67	7211766	3.3	60	7215606	3.3	85	7304126	2.2	49
7008562	3.3	67	7211767	3.3	60	7217312	3.3	85	7304127	2.2	49
7008563	3.3	67	7211768	3.3	60	7217316	3.3	85	7304128	2.2	49
7008616	3.3	67	7211769	3.3	60	7217320	3.3	85	7304132	2.2	49
7008619	3.3	67	7211770	3.3	60	7217325	3.3	85	7304133	2.2	49
7008620	3.3	67	7211771	3.3	60	7217332	3.3	85	7304134	2.2	49
7008623	3.3	67	7211807	3.3	60	7217340	3.3	85	7304135	2.2	49
7008624	3.3	67	7211809	3.3	60	7217350	3.3	85	7702950	5.2	40
7008625	3.3	67	7211811	3.3	60	7217363	3.3	85	7702952	5.2	40
7008630	3.3	67	7211813	3.3	60	7217412	3.3	85	7702954	5.2	40
7008631	3.3	67	7211816	3.3	60	7217416	3.3	85	7702959	5.2	38
7008632	3.3	67	7211821	3.3	60	7217420	3.3	85	7702965	5.2	45
7008638	3.3	67	7211829	3.3	60	7217425	3.3	85	7702965	5.2	46
7008639	3.3	67	7211836	3.3	60	7217432	3.3	85	7702965	5.2	44
7008640	3.3	67	7211842	3.3	60	7217440	3.3	85	7702973	5.2	45
7008648	3.3	67	7211848	3.3	60	7217450	3.3	85	7702973	5.2	46
7008649	3.3	67	7211851	3.3	60	7217463	3.3	85	7702973	5.2	44
7008650	3.3	67	7211852	3.3	60	7217512	3.3	85	7702974	5.2	49
7008661	3.3	67	7211853	3.3	60	7217516	3.3	85	7702975	5.2	49
7008662	3.3	67	7211854	3.3	60	7217520	3.3	85	7702976	5.2	49
7008663	3.3	67	7211855	3.3	60	7217525	3.3	85	7702979	5.2	49
7008716	3.3	67	7211856	3.3	60	7217532	3.3	85	7702980	5.2	49
7008719	3.3	67	7211857	3.3	60	7217540	3.3	85	7702990	5.2	49
7008720	3.3	67	7211858	3.3	60	7217550	3.3	85	7702991	5.2	49
7008723	3.3	67	7211859	3.3	60	7217563	3.3	85	7702993	5.2	49
7008724	3.3	67	7211860	3.3	60	7217701	3.1	10	7702994	5.2	49
7008725	3.3	67	7211881	3.3	60	7217702	3.1	10	7704461	5.2	41
7008730	3.3	67	7211882	3.3	60	7217703	3.1	10	7704484	5.2	29
7008731	3.3	67	7211883	3.3	60	7218112	3.4	153	7704489	5.2	29
7008732	3.3	67	7211884	3.3	60	7218116	3.4	153	7704489	5.2	41
7008738	3.3	67	7211885	3.3	60	7218120	3.4	153	7704497	5.2	29
7008739	3.3	67	7211886	3.3	60	7218125	3.4	153	7704497	5.2	39
7008740	3.3	67	7211887	3.3	60	7218132	3.4	153	7704501	5.2	41
7008748	3.3	67	7211888	3.3	60	7218140	3.4	153	7705204	5.2	48
7008749	3.3	67	7211889	3.3	60	7218150	3.4	153	7705208	5.2	48
7008750	3.3	67	7211890	3.3	60	7218163	3.4	153	7705541	5.2	48
7008761	3.3	67	7211960	3.3	60	7218222	3.4	148	7705543	5.2	48
7008762	3.3	67	7211961	3.3	60	7218223	3.4	148	7705544	5.2	48
7008763	3.3	67	7211962	3.3	60	7218224	3.4	148	7705549	5.2	48
7008801	3.4	144	7211963	3.3	60	7218225	3.4	148	7705569	5.2	48
7008802	3.4	144	7211964	3.3	60	7218226	3.4	148	7777001	2.3	106
7008803	3.4	144	7211965	3.3	60	7218227	3.4	148	7777002	2.3	106

Broj artikla Art. no.	poglavlje chapter	stranica page	Broj artikla Art. no.	poglavlje chapter	stranica page	Broj artikla Art. no.	poglavlje chapter	stranica page	Broj artikla Art. no.	poglavlje chapter	stranica page
7800002	5.1	8	7805252	5.2	29	7807022	2.3	109	7807260	5.2	36
7800010	5.1	8	7805252	5.2	18	7807023	2.3	108	7807260	5.3	54
7800010	5.4	69	7805253	5.2	29	7807025	2.3	108	7807263	2.3	110
7800029	5.1	8	7805253	5.2	18	7807027	2.3	108	7807263	5.2	17
7800029	5.4	69	7805255	5.2	29	7807029	2.3	108	7807263	5.2	18
7800045	5.1	8	7805255	5.2	19	7807031	2.3	108	7807265	2.3	110
7800053	5.1	12	7806051	5.2	33	7807035	2.3	106	7807266	2.3	110
7800061	5.1	11	7806053	5.2	29	7807036	2.3	107	7807270	2.5	118
7800063	5.2	43	7806053	5.2	19	7807037	2.3	106	7807271	2.3	109
7800064	5.2	43	7806070	2.3	108	7807038	2.3	107	7807272	2.5	118
7800096	5.1	6	7806071	2.3	108	7807039	2.3	107	7807276	2.5	118
7800100	5.1	5	7806072	2.3	110	7807040	2.3	107	7807278	2.5	118
7800118	5.1	5	7806073	2.3	110	7807041	2.3	107	7807280	2.5	118
7800126	5.1	6	7806075	2.3	108	7807042	2.3	106	7807282	2.5	118
7800134	5.1	5	7806076	2.3	108	7807043	2.3	106	7807283	2.5	118
7800207	5.1	9	7806086	5.2	32	7807045	2.3	107	7807288	2.5	118
7800215	5.1	10	7806116	2.3	109	7807062	2.3	108	7807289	2.5	118
7800223	5.1	10	7806248	5.2	29	7807063	2.3	106	7807290	2.5	118
7800231	5.1	10	7806248	5.2	18	7807064	2.3	109	7807291	2.5	118
7800240	5.1	9	7806249	5.2	29	7807066	2.3	106	7807292	2.5	118
7800258	5.1	9	7806249	5.2	18	7807067	2.3	107	7807293	2.5	118
7800266	5.1	12	7806252	5.2	29	7807068	2.3	107	7807294	2.5	118
7800274	5.1	12	7806252	5.2	19	7807069	2.3	109	7807295	2.5	118
7800282	5.1	11	7806388	5.2	32	7807071	2.3	109	7807296	2.5	118
7800290	5.1	13	7806390	5.2	29	7807072	2.3	109	7807297	2.5	118
7800304	5.1	13	7806390	5.2	21	7807073	2.3	109	7807299	2.5	118
7800312	5.1	9	7806391	5.2	29	7807074	2.3	110	7807320	2.5	118
7800342	5.3	64	7806391	5.2	21	7807075	2.3	106	7807339	2.5	118
7800347	5.4	69	7806500	2.3	109	7807078	2.3	109	7807341	5.2	25
7800371	5.4	68	7806560	2.3	108	7807079	2.3	109	7807341	5.2	38
7800380	5.4	68	7806570	2.3	106	7807086	2.3	107	7807341	5.2	36
7800398	5.4	68	7806581	2.3	108	7807088	2.3	107	7807341	5.3	54
7800401	5.4	69	7806583	2.3	108	7807090	2.3	109	7807368	5.4	66
7800410	5.4	72	7806584	2.3	109	7807102	2.3	109	7807377	5.3	64
7800428	5.4	72	7806587	2.3	108	7807104	2.3	108	7807380	5.2	42
7800509	5.4	68	7806589	2.3	108	7807111	2.3	108	7807393	2.5	119
7800517	5.4	68	7806590	2.3	107	7807118	2.3	107	7807395	2.5	119
7800525	5.4	68	7806600	2.3	108	7807120	2.3	106	7807397	2.5	119
7800533	5.4	70	7806610	2.3	107	7807128	2.3	106	7807398	2.5	119
7800541	5.4	70	7806625	2.3	108	7807131	2.3	108	7807399	2.5	119
7800550	5.4	70	7806629	2.3	110	7807143	2.3	109	7807400	2.5	119
7800568	5.4	70	7806630	2.3	110	7807163	5.2	34	7807401	2.5	119
7800576	5.4	71	7806750	2.3	107	7807163	5.3	54	7807403	2.5	119
7800584	5.4	71	7806751	2.3	107	7807169	2.3	108	7807404	2.3	110
7800592	5.2	44	7806759	2.3	110	7807172	2.3	106	7807406	5.3	53
7800593	5.2	44	7806780	2.3	107	7807173	2.3	106	7807408	5.3	53
7800606	5.4	70	7806790	2.3	109	7807174	2.3	108	7807450	2.3	107
7800615	5.2	46	7806793	2.3	108	7807175	2.3	109	7807467	2.3	108
7800615	5.2	47	7806794	2.3	108	7807176	2.3	109	7807468	2.3	108
7800622	5.2	46	7806795	2.3	108	7807177	2.3	110	7807480	2.3	108
7800622	5.2	47	7806796	2.3	108	7807178	2.3	107	7807490	2.3	106
7800630	5.2	46	7806801	2.3	108	7807179	2.3	109	7807491	2.3	107
7800630	5.2	47	7806803	2.3	108	7807180	2.3	110	7807492	2.3	107
7800665	5.2	47	7806806	2.3	108	7807181	2.3	107	7807497	2.3	107
7800665	5.2	45	7806807	2.3	108	7807182	2.3	107	7807498	2.3	107
7800673	5.2	47	7806808	2.3	108	7807183	2.3	110	7807500	5.3	63
7800673	5.2	45	7806853	2.3	109	7807184	2.3	107	7807502	5.3	63
7800681	5.2	47	7806860	2.3	108	7807185	2.3	106	7807506	5.3	63
7800681	5.2	45	7806861	2.3	106	7807186	2.3	109	7807508	5.3	63
7800704	5.2	46	7806863	2.3	109	7807187	2.5	118	7807510	5.3	63
7800704	5.2	47	7806864	2.3	109	7807188	2.3	106	7807512	5.3	63
7800711	5.2	47	7806867	2.3	108	7807190	2.3	107	7807514	5.3	63
7800711	5.2	45	7806869	2.3	109	7807192	2.3	106	7807521	2.3	108
7800738	5.2	46	7806870	2.3	109	7807194	2.3	106	7807522	2.3	108
7800738	5.2	47	7806874	2.3	109	7807196	2.3	107	7807600	2.3	107
7800784	5.2	49	7806880	2.3	107	7807198	2.3	107	7807601	2.3	107
7800785	5.2	49	7806910	2.3	109	7807199	2.3	106	7807602	2.3	106
7800786	5.2	49	7806912	2.3	109	7807199	2.3	108	7807602	2.3	107
7800983	5.4	66	7806914	2.3	108	7807203	2.3	108	7807604	2.5	119
7801009	5.2	29	7806915	2.3	109	7807207	2.3	108	7807605	2.5	118
7801017	5.2	29	7806917	2.3	109	7807228	2.3	109	7807606	2.3	107
7804016	5.4	70	7806925	2.3	109	7807244	2.3	108	7807608	2.3	109
7805039	5.2	42	7806940	2.3	108	7807246	2.3	108	7807609	2.3	109
7805039	5.2	43	7806980	2.3	108	7807247	2.3	106	7807611	2.3	109
7805047	5.2	31	7806981	2.3	108	7807249	2.3	106	7807612	2.3	109
7805056	5.2	29	7806995	2.3	108	7807259	5.2	25	7807622	2.3	107
7805056	5.2	19	7807001	2.3	107	7807259	5.2	38	7807623	2.3	109
7805080	5.2	32	7807002	2.3	107	7807259	5.2	36	7807624	2.3	108
7805080	5.2	33	7807003	2.3	106	7807259	5.3	54	7807625	2.3	109
7805098	5.2	32	7807010	2.3	109	7807260	5.2	25	7807626	2.3	110
7805098	5.2	33	7807018	2.3	109	7807260	5.2	38	7807628	2.3	106

Broj artikla	poglavlje	stranica	Broj artikla	poglavlje	stranica	Broj artikla	poglavlje	stranica	Broj artikla	poglavlje	stranica
Art. no.	chapter	page	Art. no.	chapter	page	Art. no.	chapter	page	Art. no.	chapter	page
7807629	2.3	108	7807784	2.3	109	7812167	5.2	34	8101167	3.2	57
7807634	2.3	109	7807786	2.3	108	7812167	5.2	35	8101213	3.2	57
7807636	2.3	109	7807787	2.3	108	7812210	5.2	29	8101299	3.2	57
7807637	2.3	109	7807788	2.3	108	7812210	5.2	23	8101361	3.2	57
7807638	2.3	108	7807789	2.3	107	7812210	5.2	24	8101421	3.2	57
7807639	2.3	110	7807790	2.3	107	7812213	5.2	36	8101485	3.2	57
7807640	2.3	107	7807791	2.3	106	7812213	5.2	37	8101516	3.2	57
7807642	2.3	110	7807792	2.3	107	7812218	5.2	25	8101520	3.2	57
7807643	2.3	109	7807794	2.3	107	7812218	5.2	26	8101525	3.2	57
7807644	2.3	109	7807795	2.3	108	7812218	5.2	29	8101532	3.2	57
7807649	2.3	107	7807797	2.3	108	7812221	5.2	36	8101540	3.2	57
7807650	2.3	107	7807806	2.3	109	7812221	5.2	37	8101550	3.2	57
7807651	2.3	109	7807810	2.3	109	7812226	5.2	25	8101563	3.2	57
7807652	2.3	109	7807820	2.3	107	7812226	5.2	26	8103011	3.3	95
7807653	2.3	106	7807831	2.3	108	7812226	5.2	29	8103020	3.3	95
7807654	2.5	118	7807832	2.3	107	7812370	5.2	38	8103038	3.3	95
7807655	2.3	108	7807833	2.3	106	7812370	5.2	39	8103054	3.3	95
7807656	2.3	106	7807834	2.3	110	7813015	5.2	32	8103062	3.3	95
7807657	2.3	106	7807835	2.3	109	7813015	5.2	21	8103070	3.3	95
7807660	2.3	107	7807836	2.3	107	7813015	5.2	22	8103089	3.3	95
7807661	2.3	107	7807840	2.3	109	7813032	5.2	22	8103097	3.3	95
7807662	2.3	107	7807841	2.3	109	7813032	5.2	32	8103119	3.3	95
7807663	2.3	106	7807850	5.2	23	7813032	5.2	21	8103127	3.3	95
7807664	2.3	107	7807851	2.3	23	7814009	5.2	38	8103135	3.3	95
7807665	2.3	110	7810164	5.2	34	7814011	5.2	42	8103143	3.3	95
7807665	5.2	17	7810164	5.3	60	7814011	5.2	43	8103151	3.3	95
7807665	5.2	18	7810210	5.2	36	7814012	5.2	40	8103160	3.3	95
7807666	2.3	110	7810210	5.3	60	7814038	5.2	38	8103186	3.3	95
7807666	5.2	17	7810377	5.2	38	7814039	5.2	40	8103194	3.3	95
7807667	2.3	107	7810377	5.3	60	7814045	5.2	28	8103208	3.3	95
7807668	2.3	110	7810385	5.2	38	7814046	5.2	28	8103216	3.3	95
7807670	2.3	106	7810385	5.3	61	7814047	5.2	28	8103232	3.3	95
7807671	2.3	107	7810393	5.2	36	7814048	5.2	28	8103240	3.3	95
7807673	2.3	108	7810393	5.3	61	7814049	5.2	28	8103259	3.3	95
7807676	2.3	106	7810394	5.2	34	7814050	5.2	28	8103283	3.3	95
7807678	5.2	17	7810394	5.3	61	7814051	5.2	28	8103356	3.3	95
7807679	2.3	109	7810400	5.2	23	7814052	5.2	28	8107092	3.3	96
7807680	2.3	109	7810400	5.2	34	7814053	5.2	28	8107114	3.3	96
7807681	2.3	109	7810400	5.3	62	7814054	5.2	28	8107130	3.3	96
7807682	2.3	106	7810401	5.2	36	7814123	5.2	28	8107165	3.3	96
7807683	2.3	106	7810401	5.3	62	7814124	5.2	28	8107211	3.3	96
7807684	2.3	109	7810402	5.2	38	7814125	5.2	28	8107297	3.3	96
7807685	2.3	106	7810402	5.3	62	7814126	5.2	28	8107360	3.3	96
7807686	2.3	107	7810403	5.2	25	7814128	5.2	28	8107424	3.3	96
7807687	2.3	107	7810403	5.3	62	7814129	5.2	28	8107483	3.3	96
7807688	2.3	107	7811100	5.2	29	7814130	5.2	28	8110026	3.3	97
7807690	2.3	110	7811100	5.2	23	7814135	5.2	28	8110050	3.3	97
7807692	2.3	107	7811100	5.2	24	7814136	5.2	28	8110085	3.3	97
7807693	2.3	107	7811110	5.2	29	7814137	5.2	28	8110093	3.3	97
7807694	2.3	109	7811110	5.2	23	7814138	5.2	28	8110107	3.3	97
7807695	2.3	108	7811110	5.2	24	7814140	5.2	28	8110115	3.3	97
7807697	2.5	118	7811160	5.2	34	7814141	5.2	28	8110123	3.3	97
7807698	2.5	118	7811160	5.2	35	7814145	5.2	28	8110131	3.3	97
7807699	2.3	107	7811163	5.2	34	7814146	5.2	28	8110166	3.3	97
7807700	2.3	107	7811163	5.2	35	7814147	5.2	28	8110174	3.3	97
7807710	2.3	109	7811200	5.2	29	7814148	5.2	28	8110182	3.3	97
7807711	2.3	107	7811200	5.2	23	7815035	5.2	40	8110190	3.3	97
7807723	2.3	107	7811200	5.2	24	7815036	5.2	40	8110204	3.3	97
7807727	2.3	109	7811217	5.2	36	7815045	5.2	28	8112070	3.3	93
7807729	2.3	109	7811217	5.2	37	7815046	5.2	28	8112096	3.3	93
7807730	2.3	106	7811222	5.2	25	7815047	5.2	28	8112118	3.3	93
7807760	2.3	109	7811222	5.2	26	7815048	5.2	28	8112134	3.3	93
7807761	2.5	118	7811222	5.2	29	7815049	5.2	28	8112169	3.3	93
7807762	2.3	107	7811225	5.2	36	7815050	5.2	28	8112215	3.3	93
7807763	2.3	107	7811225	5.2	37	7815051	5.2	28	8112250	3.3	93
7807764	2.3	107	7811230	5.2	25	7815052	5.2	28	8112290	3.3	93
7807765	2.5	118	7811230	5.2	26	7815053	5.2	28	8112320	3.3	93
7807766	2.5	118	7811230	5.2	29	7815054	5.2	28	8112363	3.3	93
7807767	2.3	107	7811373	5.2	38	7894050	2.3	106	8112400	3.3	93
7807768	2.3	107	7811373	5.2	39	7895000	5.4	68	8112428	3.3	93
7807768	2.3	108	7811375	5.2	29	7895006	5.4	71	8112495	5.2	42
7807769	2.3	106	7811375	5.2	27	7895007	5.4	71	8112495	5.2	43
7807771	2.3	107	7811377	5.2	29	7895008	5.4	71	8112500	3.3	93
7807773	2.3	107	7812100	5.2	29	7895009	5.4	71	8112630	3.3	93
7807775	2.3	106	7812100	5.2	23	7895010	5.4	71	8112675	3.3	93
7807776	2.3	109	7812100	5.2	24	7895011	5.4	71	8112800	2.2	43
7807778	2.3	106	7812110	5.2	29	7895017	5.5	86	8112801	2.2	43
7807779	2.3	109	7812110	5.2	23	8101078	3.2	57	8112802	2.2	43
7807780	2.3	108	7812110	5.2	24	8101094	3.2	57	8112803	2.2	43
7807781	2.3	108	7812162	5.2	34	8101116	3.2	57	8112804	2.2	43
7807783	2.3	106	7812162	5.2	35	8101132	3.2	57	8112805	2.2	43

Broj artikla Art. no.	poglavlje chapter	stranica page	Broj artikla Art. no.	poglavlje chapter	stranica page	Broj artikla Art. no.	poglavlje chapter	stranica page	Broj artikla Art. no.	poglavlje chapter	stranica page
8112806	2.2	43	8113647	5.2	30	8117136	5.1	4	8221250	2.5	120
8112807	2.2	43	8113647	5.2	45	8117136	5.1	8	8221251	2.5	120
8112808	2.2	43	8113647	5.2	46	8117136	5.1	11	8221252	2.5	120
8112809	2.2	43	8113647	5.1	4	8117136	5.1	12	8221253	2.5	120
8112810	2.2	43	8113647	5.2	42	8117136	5.2	22	8221254	2.5	120
8112811	2.2	43	8113647	5.2	44	8117136	5.3	59	8221255	2.5	120
8112812	2.2	43	8113647	5.3	59	8117179	5.2	25	8221256	2.5	120
8112813	2.2	43	8113648	5.1	4	8117179	5.2	38	8221350	2.5	120
8112814	2.2	43	8113648	5.3	59	8117179	2.2	50	8221351	2.5	120
8113010	5.1	4	8114200	3.1	10	8117179	5.1	4	8221352	2.5	120
8113010	5.1	13	8114201	3.1	10	8117179	5.1	5	8221353	2.5	120
8113010	5.3	57	8114202	3.1	10	8117179	5.1	6	8221354	2.5	120
8113017	5.1	4	8114203	3.1	10	8117179	5.1	8	8221355	2.5	120
8113017	5.1	8	8114204	3.1	10	8117179	5.1	10	8221356	2.5	120
8113017	5.3	57	8114205	3.1	10	8117179	5.1	12	8221400	2.5	120
8113025	5.3	57	8114206	3.1	10	8117179	5.1	13	8221401	2.5	120
8113041	5.1	4	8114207	3.1	10	8117179	5.2	36	8221570	2.2	44
8113041	5.1	8	8114208	3.1	10	8117179	5.3	59	8221571	2.2	44
8113041	5.1	9	8114209	3.1	10	8117225	2.2	50	8221572	2.2	44
8113041	5.1	10	8114210	3.1	10	8117225	5.1	4	8221573	2.2	44
8113041	5.3	57	8114211	3.1	10	8117225	5.1	6	8320440	2.5	128
8113050	5.1	10	8114212	3.1	10	8117225	5.1	8	8320441	2.5	128
8113050	5.1	13	8114215	3.1	10	8117225	5.1	10	8320443	2.5	128
8113050	5.3	57	8114250	3.1	10	8117225	5.1	11	8320444	2.5	128
8113068	5.1	4	8114251	3.1	10	8117225	5.2	25	8320446	2.5	128
8113068	5.1	8	8114252	3.1	10	8117225	5.2	34	8320447	2.5	128
8113068	5.3	57	8114523	3.1	10	8117225	5.2	36	8330100	2.5	127
8113084	5.1	9	8115010	3.3	98	8117225	5.2	38	8330101	2.5	127
8113084	5.1	10	8115028	3.3	98	8117225	5.3	59	8330102	2.5	127
8113084	5.3	57	8115036	3.3	98	8117233	2.2	50	8330103	2.5	127
8113092	5.1	9	8115044	3.3	98	8117233	5.1	4	8330104	2.5	127
8113092	5.3	57	8115052	3.3	98	8117233	5.3	59	8330105	2.5	127
8113130	5.4	72	8115060	3.3	98	8117292	5.2	25	8330106	2.5	127
8113301	3.3	94	8115079	3.3	98	8117292	5.2	38	8330107	2.5	127
8113301	3.4	163	8115087	3.3	98	8117292	2.2	50	8330108	2.5	127
8113302	3.3	94	8115095	3.3	98	8117292	5.1	4	8330109	2.5	127
8113302	3.4	163	8115109	3.3	98	8117292	5.2	36	8330110	2.5	127
8113303	3.3	94	8115150	3.3	98	8117292	5.3	59	8330111	2.5	127
8113303	3.4	163	8115151	3.3	98	8118094	5.1	4	8330112	2.5	127
8113304	3.3	94	8115152	3.3	98	8118094	5.3	56	8330113	2.5	127
8113304	3.4	163	8115153	3.3	98	8118132	5.1	4	8330114	2.5	127
8113305	3.3	94	8115154	3.3	98	8118132	5.3	56	8330115	2.5	127
8113305	3.4	163	8115155	3.3	98	8118175	5.1	4	8330116	2.5	127
8113306	3.3	94	8115156	3.3	98	8118175	5.3	56	8330117	2.5	127
8113306	3.4	163	8115157	3.3	98	8118221	5.1	4	8330118	2.5	127
8113307	3.3	94	8115508	5.2	30	8118221	5.3	56	8330119	2.5	127
8113307	3.4	163	8115508	5.3	58	8211000	2.5	124	8330120	2.5	127
8113308	3.3	94	8115516	5.2	30	8211019	2.5	124	8330121	2.5	127
8113308	3.4	163	8115516	5.3	58	8211027	2.5	124	8330122	2.5	127
8113309	3.3	94	8115530	5.1	7	8211035	2.5	124	8330123	2.5	127
8113309	3.4	163	8115531	5.1	7	8211043	2.5	124	8330124	2.5	127
8113310	3.3	94	8115532	5.1	7	8211060	2.5	124	8330125	2.5	127
8113310	3.4	163	8115540	5.1	7	8211086	2.5	124	8330126	2.5	127
8113319	5.1	12	8115541	5.1	7	8211094	2.5	124	8330127	2.5	127
8113319	5.3	57	8115605	5.2	30	8211108	2.5	124	8330128	2.5	127
8113327	5.1	12	8115605	5.3	58	8211116	2.5	124	8330129	2.5	127
8113327	5.3	57	8117080	5.2	30	8211124	2.5	124	8330130	2.5	127
8113352	5.3	57	8117080	5.2	31	8211140	2.5	124	8330150	2.5	127
8113416	5.3	57	8117080	2.2	50	8211159	2.5	124	8330151	2.5	127
8113424	5.2	32	8117080	5.1	4	8211191	2.5	124	8330152	2.5	127
8113424	5.2	33	8117080	5.3	59	8211205	2.5	124	8330153	2.5	127
8113424	5.3	57	8117101	5.2	31	8213055	2.5	124	8330154	2.5	127
8113490	3.3	94	8117101	5.2	32	8213127	2.5	124	8330155	2.5	127
8113490	3.4	163	8117101	5.2	33	8221050	2.5	120	8330156	2.5	127
8113492	3.3	94	8117101	5.2	45	8221051	2.5	120	8330157	2.5	127
8113492	3.4	163	8117101	5.2	46	8221052	2.5	120	8330158	2.5	127
8113493	3.3	94	8117101	2.2	50	8221053	2.5	120	8330159	2.5	127
8113493	3.4	163	8117101	5.1	4	8221054	2.5	120	8330200	2.5	127
8113494	3.3	94	8117101	5.1	5	8221055	2.5	120	8330201	2.5	127
8113494	3.4	163	8117101	5.1	6	8221056	2.5	120	8330202	2.5	127
8113495	3.3	94	8117101	5.1	8	8221057	2.5	120	8330203	2.5	127
8113495	3.4	163	8117101	5.1	9	8221058	2.5	120	8330204	2.5	127
8113496	3.3	94	8117101	5.1	12	8221150	2.5	120	8330205	2.5	127
8113496	3.4	163	8117101	5.2	28	8221151	2.5	120	8330206	2.5	127
8113497	3.3	94	8117101	5.2	30	8221152	2.5	120	8330207	2.5	127
8113497	3.4	163	8117101	5.2	42	8221153	2.5	120	8330208	2.5	127
8113498	3.3	94	8117101	5.2	43	8221154	2.5	120	8330209	2.5	127
8113498	3.4	163	8117101	5.2	44	8221155	2.5	120	8330210	2.5	127
8113646	5.2	32	8117101	5.3	59	8221156	2.5	120	8330211	2.5	127
8113646	5.2	33	8117136	5.2	33	8221157	2.5	120	8330212	2.5	127
8113646	5.3	59	8117136	2.2	50	8221158	2.5	120	8330213	2.5	127

Broj artikla	poglavlje	stranica	Broj artikla	poglavlje	stranica	Broj artikla	poglavlje	stranica	Broj artikla	poglavlje	stranica
Art. no.	chapter	page	Art. no.	chapter	page	Art. no.	chapter	page	Art. no.	chapter	page
8330214	2.5	127	9203508	3.4	140	9800376	5.2	16	9800905	5.2	25
8330215	2.5	127	9203509	3.4	140	9800377	5.2	16	9800905	5.2	38
8330216	2.5	127	9203510	3.4	140	9800384	5.2	16	9800905	5.1	4
8330217	2.5	127	9203511	3.4	140	9800385	5.2	16	9800905	5.1	6
8330218	2.5	127	9203512	3.4	140	9800386	5.2	16	9800905	5.1	8
8330219	2.5	127	9500020	5.2	50	9800387	5.2	16	9800905	5.1	10
8330220	2.5	127	9500057	5.5	87	9800530	2.2	50	9800905	5.1	11
8330221	2.5	127	9500065	5.5	87	9800557	5.2	44	9800905	5.2	34
8330222	2.5	127	9500073	5.5	87	9800573	5.2	33	9800905	5.2	36
8330223	2.5	127	9500099	5.2	50	9800575	5.2	29	9800905	5.3	55
8330224	2.5	127	9500100	5.2	50	9800575	5.2	22	9800913	2.2	50
8330225	2.5	127	9500197	5.5	82	9800576	5.2	29	9800921	5.1	4
8330226	2.5	127	9500198	5.5	82	9800576	5.2	22	9800921	5.3	52
8330227	2.5	127	9500316	5.5	86	9800581	5.2	42	9800930	5.3	52
8330228	2.5	127	9500324	5.5	86	9800581	5.2	43	9800956	5.2	33
8330229	2.5	127	9500332	5.5	86	9800582	5.2	42	9800956	5.1	4
8330230	2.5	127	9500340	5.5	86	9800582	5.2	43	9800956	5.1	8
8330250	2.5	127	9500586	5.5	74	9800590	5.2	42	9800956	5.1	11
8330251	2.5	127	9500588	5.5	74	9800591	5.2	42	9800956	5.1	12
8330252	2.5	127	9500596	5.5	81	9800603	5.2	32	9800956	5.2	22
8330253	2.5	127	9500627	5.5	84	9800603	5.2	33	9800956	5.3	55
8330254	2.5	127	9500642	5.5	83	9800603	5.2	46	9800964	2.2	50
8330255	2.5	127	9500643	5.5	83	9800611	5.2	32	9800972	5.1	4
8330256	2.5	127	9500646	5.5	83	9800611	5.2	33	9800972	5.1	8
8330257	2.5	127	9500693	5.5	79	9800611	5.2	46	9800972	5.3	52
8330258	2.5	127	9500955	5.5	85	9800617	5.2	29	9800999	5.2	44
8330259	2.5	127	9501189	5.5	84	9800617	5.2	20	9801006	5.1	9
8500096	2.5	126	9501436	5.5	78	9800662	2.2	50	9801006	5.3	53
8500118	2.5	126	9501614	5.5	86	9800680	5.2	29	9801014	5.1	9
8500134	2.5	126	9502106	5.5	83	9800680	5.2	20	9801014	5.3	53
8500169	2.5	126	9502564	5.5	79	9800681	5.2	29	9801022	5.1	9
8500215	2.5	126	9502574	5.5	79	9800681	5.2	20	9801022	5.3	53
8500290	2.5	126	9502590	5.5	79	9800682	5.2	29	9801028	5.3	53
8500363	2.5	126	9503669	5.5	80	9800682	5.2	20	9801029	5.3	53
8500428	2.5	126	9504667	5.5	80	9800685	5.2	20	9801030	5.1	10
8500487	2.5	126	9505045	5.5	75	9800689	5.2	32	9801030	5.3	53
8501033	2.5	126	9505049	5.5	75	9800689	5.2	33	9801049	5.1	10
8501068	2.5	126	9505200	5.5	77	9800689	5.2	36	9801049	5.3	53
8501076	2.5	126	9505400	5.5	77	9800689	5.2	45	9801057	5.1	10
8713187	2.5	122	9505410	5.5	77	9800689	5.2	46	9801057	5.3	53
8713188	2.5	122	9505420	5.5	77	9800689	5.3	55	9801065	5.1	13
8713189	2.5	122	9508010	5.5	80	9800689	5.1	4	9801065	5.3	52
8713190	2.5	122	9509010	5.5	80	9800689	5.1	5	9801073	5.1	13
8713195	2.5	122	9510001	5.5	78	9800689	5.1	6	9801073	5.3	52
8713196	2.5	122	9530177	5.2	49	9800689	5.1	8	9801079	5.3	53
9000020	3.1	54	9530178	5.2	49	9800689	5.1	9	9801080	5.3	53
9000025	3.1	54	9530179	5.2	49	9800689	5.1	12	9801081	5.1	12
9000030	3.1	54	9530184	5.2	49	9800689	5.2	28	9801081	5.3	53
9000151	2.1	38	9530185	5.2	49	9800689	5.2	42	9801082	5.3	53
9000152	2.1	38	9532927	5.5	83	9800689	5.2	43	9801083	5.3	53
9000153	2.1	38	9533649	5.5	76	9800689	5.2	44	9801090	5.1	12
9000154	2.1	38	9533657	5.5	76	9800697	5.2	25	9801090	5.3	53
9000156	2.1	38	9533667	5.5	76	9800697	5.2	38	9801103	5.1	12
9000160	2.1	38	9533675	5.5	76	9800697	5.3	55	9801103	5.3	53
9000163	2.1	38	9533701	5.5	76	9800697	5.1	4	9801111	5.3	53
9000170	2.1	38	9800300	5.2	17	9800697	5.1	5	9801120	5.1	11
9001450	2.1	38	9800301	5.2	17	9800697	5.1	6	9801120	5.3	53
9001451	2.1	38	9800302	5.2	17	9800697	5.1	8	9801121	5.3	53
9001515	2.1	37	9800303	5.2	17	9800697	5.1	10	9801122	5.3	53
9001524	2.1	37	9800310	5.2	17	9800697	5.1	12	9801138	5.2	25
9001527	2.1	37	9800311	5.2	17	9800697	5.1	13	9801138	5.2	38
9001530	2.1	37	9800312	5.2	17	9800700	5.1	6	9801138	5.1	4
9001533	2.1	37	9800313	5.2	17	9800719	5.1	5	9801138	5.2	36
9001534	2.1	37	9800320	5.2	16	9800727	5.1	5	9801138	5.3	55
9001537	2.1	37	9800321	5.2	16	9800735	5.1	6	9801154	2.2	50
9001539	2.1	37	9800322	5.2	16	9800751	5.1	4	9801162	5.1	11
9001540	2.1	37	9800323	5.2	16	9800751	5.1	8	9801162	5.3	53
9001542	2.1	37	9800330	5.2	16	9800751	5.3	52	9801170	5.1	9
9001543	2.1	37	9800331	5.2	16	9800760	5.1	5	9801170	5.3	53
9001544	2.1	37	9800332	5.2	16	9800778	5.1	4	9801189	5.1	4
9001545	2.1	37	9800333	5.2	16	9800778	5.3	52	9801189	5.3	52
9001550	2.1	37	9800340	5.2	16	9800786	5.2	42	9801243	5.1	4
9001552	2.1	37	9800341	5.2	16	9800787	5.2	42	9801243	5.3	52
9001555	2.1	37	9800342	5.2	16	9800794	5.2	45	9801251	5.1	4
9001558	2.1	37	9800343	5.2	16	9800808	5.2	45	9801251	5.3	55
9001561	2.1	37	9800350	5.2	16	9800859	5.1	4	9801260	5.1	4
9001564	2.1	37	9800351	5.2	16	9800859	5.1	8	9801260	5.3	52
9001567	2.1	37	9800352	5.2	16	9800867	5.1	4	9801278	5.1	4
9203505	3.4	140	9800353	5.2	16	9800867	5.1	8	9801278	5.3	52
9203506	3.4	140	9800374	5.2	16	9800867	5.3	52	9801286	5.1	4
9203507	3.4	140	9800375	5.2	16	9800891	5.3	55	9801286	5.3	52

Broj artikla Art. no.	poglavlje chapter	stranica page	Broj artikla Art. no.	poglavlje chapter	stranica page	Broj artikla Art. no.	poglavlje chapter	stranica page	Broj artikla Art. no.	poglavlje chapter	stranica page
9801308	5.1	4	9805913	2.5	122	9806109	2.3	98	9806300	2.3	100
9801308	5.3	52	9805914	2.5	122	9806110	2.3	98	9806301	2.3	98
9801324	5.2	30	9805915	2.5	124	9806111	2.3	97	9806302	2.3	100
9801324	5.2	31	9805916	2.5	122	9806112	2.3	98	9806304	2.3	100
9801324	5.1	4	9805917	2.5	122	9806113	2.3	98	9806307	2.3	98
9801324	5.3	55	9805925	2.5	122	9806114	2.3	98	9807391	2.5	119
9801340	5.3	52	9805935	2.5	121	9806115	2.3	99	9810045	2.3	96
9801700	5.1	7	9805936	2.5	121	9806116	2.3	99	9810075	2.3	96
9801701	5.1	7	9805938	2.5	121	9806117	2.3	99	9810100	2.3	96
9801702	5.1	7	9805939	2.5	121	9806118	2.3	99	9810110	2.3	96
9801703	5.1	7	9805940	2.5	121	9806119	2.3	98	9810130	2.3	96
9801704	5.1	7	9805941	2.5	121	9806120	2.3	99	9810170	2.3	96
9801859	5.3	52	9805942	2.5	121	9806121	2.3	98	9810220	2.3	96
9805281	5.3	57	9805943	2.5	121	9806122	2.3	99	9810260	2.3	96
9805281	5.1	4	9805944	2.5	121	9806123	2.3	99	9810375	2.3	96
9805281	5.1	8	9805945	2.5	121	9806124	2.3	99	9810400	2.3	96
9805310	2.5	122	9805946	2.5	121	9806125	2.3	99	9810430	2.3	96
9805311	2.5	122	9805947	2.5	121	9806126	2.3	99	9810470	2.3	96
9805312	2.5	122	9805949	2.5	121	9806127	2.3	99	9810520	2.3	96
9805313	2.5	122	9805951	2.5	121	9806128	2.3	99	9810550	2.3	100
9805314	2.5	122	9805955	2.5	121	9806129	2.3	98	9810551	2.3	100
9805405	2.5	123	9805956	2.5	122	9806130	2.3	99	9810560	2.3	96
9805406	2.5	123	9805959	2.5	121	9806131	2.3	99	9811220	2.3	104
9805407	2.5	123	9805960	2.5	122	9806133	2.3	97	9817030	2.3	101
9805408	2.5	123	9805961	2.5	122	9806134	2.3	98	9817031	2.3	101
9805409	2.5	123	9805962	2.5	122	9806135	2.3	98	9817032	2.3	101
9805410	2.5	123	9805963	2.5	122	9806136	2.3	98	9817033	2.3	101
9805411	2.5	123	9805965	2.5	122	9806137	2.3	98	9817034	2.3	101
9805412	2.5	123	9805966	2.5	124	9806138	2.3	98	9817035	2.3	101
9805413	2.5	123	9805974	2.5	124	9806140	2.3	98	9817036	2.3	101
9805414	2.5	123	9805975	2.5	122	9806141	2.3	98	9817037	2.3	101
9805415	2.5	123	9805976	2.5	122	9806142	2.3	98	9817038	2.3	101
9805416	2.5	123	9805977	2.5	122	9806143	2.3	98	9817039	2.3	101
9805431	2.5	213	9805978	2.5	122	9806144	2.3	98	9817040	2.3	101
9805432	2.5	213	9805979	2.5	122	9806145	2.3	98	9817041	2.3	101
9805433	2.5	213	9805980	2.5	122	9806146	2.3	98	9817050	2.3	101
9805434	2.5	213	9805981	2.5	122	9806147	2.3	98	9817060	2.3	102
9805435	2.5	213	9805982	2.5	124	9806148	2.3	98	9817079	2.3	103
9805436	2.5	213	9805985	2.5	122	9806149	2.3	98	9817080	2.3	101
9805437	2.5	213	9805990	2.5	124	9806153	2.3	98	9817083	2.3	101
9805439	2.5	213	9806016	2.3	102	9806154	2.3	100	9817085	2.3	102
9805440	2.5	213	9806024	2.3	102	9806156	2.3	98	9817090	2.3	104
9805441	2.5	213	9806025	2.3	102	9806157	2.3	98	9817091	2.3	104
9805442	2.5	213	9806026	2.3	102	9806158	2.3	98	9817092	2.3	104
9805443	2.5	213	9806032	2.3	102	9806159	2.3	98	9817095	2.3	104
9805444	2.5	213	9806040	2.3	102	9806160	2.3	98	9817107	2.3	102
9805445	2.5	213	9806045	2.3	102	9806161	2.3	98	9817131	2.3	102
9805446	2.5	213	9806059	2.3	102	9806162	2.3	97	9817158	2.3	102
9805447	2.5	213	9806067	2.3	104	9806164	2.3	98	9817159	2.3	102
9805448	2.5	213	9806068	2.3	99	9806165	2.3	98	9817174	2.3	102
9805449	2.5	213	9806069	2.3	99	9806166	2.3	98	9817190	2.3	102
9805450	2.5	213	9806070	2.3	99	9806167	2.3	98	9817200	2.3	101
9805451	2.5	213	9806072	2.3	99	9806168	2.3	97	9817201	2.3	101
9805453	2.5	213	9806073	2.3	99	9806169	2.3	98	9817202	2.3	101
9805454	2.5	213	9806074	2.3	99	9806170	2.3	97	9817203	2.3	101
9805455	2.5	213	9806076	2.3	99	9806171	2.3	98	9817212	2.3	102
9805456	2.5	213	9806079	2.3	97	9806172	2.3	98	9817220	2.3	102
9805457	2.5	213	9806081	2.3	97	9806174	2.3	98	9817250	2.3	102
9805458	2.5	213	9806082	2.3	97	9806175	2.3	98	9817263	2.3	102
9805476	2.5	213	9806083	2.3	97	9806177	2.3	98	9817280	2.3	102
9805477	2.5	213	9806086	2.3	97	9806178	2.3	98	9817300	2.3	101
9805524	2.3	102	9806087	2.3	97	9806179	2.3	98	9817301	2.3	102
9805532	2.3	102	9806088	2.3	97	9806180	2.3	97	9817302	2.3	101
9805540	2.3	102	9806089	2.3	97	9806181	2.3	98	9817303	2.3	101
9805559	2.3	102	9806091	2.3	97	9806182	2.3	98	9817304	2.3	101
9805567	2.3	102	9806092	2.3	97	9806183	2.3	98	9817305	2.3	101
9805575	2.3	102	9806093	2.3	97	9806184	2.3	98	9817306	2.3	101
9805583	2.3	102	9806094	2.3	97	9806185	2.3	99	9817308	2.3	101
9805591	2.5	119	9806095	2.3	97	9806186	2.3	99	9817309	2.3	101
9805702	2.3	108	9806096	2.3	97	9806187	2.3	99	9817310	2.3	101
9805706	2.3	108	9806097	2.3	97	9806188	2.3	99	9817311	2.3	101
9805710	2.3	109	9806099	2.3	97	9806189	2.3	99	9817312	2.3	102
9805711	2.3	109	9806100	2.3	98	9806190	2.3	100	9817328	2.3	102
9805850	5.5	78	9806101	2.3	98	9806191	2.3	100	9817336	2.3	102
9805869	5.5	78	9806102	2.3	98	9806192	2.3	100	9817344	2.3	102
9805888	5.5	78	9806103	2.3	98	9806193	2.3	100	9817352	2.3	102
9805900	2.5	122	9806104	2.3	98	9806197	2.3	97	9817360	2.3	102
9805907	2.5	121	9806105	2.3	97	9806204	2.3	98	9817379	2.3	102
9805908	2.5	121	9806106	2.3	98	9806205	2.3	98	9817387	2.3	102
9805911	2.5	122	9806107	2.3	98	9806208	2.3	98	9817395	2.3	102
9805912	2.5	122	9806108	2.3	98	9806209	2.3	98	9817396	2.3	102

Broj artikla Art. no.	poglavlje chapter	stranica page	Broj artikla Art. no.	poglavlje chapter	stranica page	Broj artikla Art. no.	poglavlje chapter	stranica page	Broj artikla Art. no.	poglavlje chapter	stranica page
9817500	2.3	104									
9817501	2.3	103									
9817502	2.3	104									
9817503	2.3	103									
9842000	4.0	4									
9842001	4.0	4									
9842002	4.0	4									
9842003	4.0	4									
9842004	4.0	4									
9842005	4.0	4									
9842006	4.0	4									
9842007	4.0	4									
9842008	4.0	4									
9842009	4.0	4									
9842010	4.0	4									
9842011	4.0	4									
9842012	4.0	4									
9843000	4.0	4									
9843001	4.0	4									
9843002	4.0	4									
9843003	4.0	4									
9843004	4.0	4									
9843005	4.0	4									
9843006	4.0	4									
9843007	4.0	4									
9843008	4.0	4									
9843009	4.0	4									
9843010	4.0	4									
9843011	4.0	4									
9843012	4.0	4									
9844000	4.0	4									
9844001	4.0	4									
9844002	4.0	4									
9844003	4.0	4									
9844004	4.0	4									
9844005	4.0	4									
9844006	4.0	4									
9844007	4.0	4									
9844008	4.0	4									
9844009	4.0	4									
9844010	4.0	4									
9844011	4.0	4									
9844012	4.0	4									

BEOVIĆ

Schlemmer
Our Technology.Your Success.

Our Technology.Your Success.